Modular Pneumatic Linear Drive Systems

ORIGA SYSTEM PLUS

aerospace
climate control
electromechanical
filtration
fluid & gas handling
hydraulics
pneumatics
process control
sealing & shielding

Parker

ENGINEERING YOUR SUCCESS.

Parker Origa rodless pneumatic cylinders are the first rodless cylinders that have been approved for use in potentially explosive atmospheres in Equipment Group II, Category 2 GD.
The Cylinders are to the ATEX Certification 94/9/EG (ATEX 95) for Pneumatic Components.

For the different classifications and details please see pages 35, 36 and 131 - 133.

You will find further information on the ATEX Directives in our brochure P-A5P060GB.

Special Versions

for use in Ex-Areas

for Clean Room Applications
certified to
DIN EN ISO 14644-1

Stainless steel version
for special applications

with special pneumatic cushioning system for cycle time optimization,
for Ø 16 to 50 mm
– on request

High Temperature Version
for temperatures up to +120°C

Low Temperature Version
for temperatures up to
-40°C

Slow Speed Version
v = 0.005 – 0.2 m/s

High Speed Version
$v_{max.}$ = 30 m/s

Cylinders with extreme long strokes
Stroke length up to 41 m

Note:
For guidance on the application of the information in this catalogue please refer to the inner back cover.

Contents
Linear Drives

	ORIGA System Plus - the concept	Page
	Introduction – OSP Concept	2-3
	Modular Components Overview	4-5
	Control Examples for OSP-P	6
	OSP-P Application examples	7
	Rodless Pneumatic Cylinders	
	Overview	9-13
	Series OSP-P ø10 to 80 mm	15-21, 24
	Integrated Valves VOE	22-23
	Long-Stroke Cylinders	25-29
	Clean Room Cylinders	31-34
	ATEX-Version Ⓔx	35-36
NEW	ATEX-Version Ⓔx BASIC GUIDE	35-36
	ATEX-Version Ⓔx Plain Bearing Guide SLIDELINE	35-36
	Bi-parting Version	37-38
NEW	BASIC GUIDE BG	39-45
	Linear Guides	
	Overview	47-48
	Plain Bearing Guide SLIDELINE	49-51
	Plain Bearing Guide SLIDELINE – with ACTIVE-Brake	49-51
	Roller Guide POWERSLIDE	53-57
	Aluminium-Roller Guide PROLINE	59-61
	Aluminium-Roller Guide – PROLINE with ACTIVE-Brake	59-61
	Recirculating Ball Bearing Guide STARLINE	63-69
	– Variable stop VS	66-69
	Recirculating Ball Bearing Guide KF	71-77
	– Variable stop VS	74-77
	Heavy Duty Guide HD	79-86
	– Variable stop VS	82
	– Intermediate stop module ZSM	83-86

Brakes	Page
Overview	87-88
ACTIVE-Brakes	
ACTIVE-Brake – for Standard Cylinder	89-92
Plain Bearing Guide SLIDELINE – with ACTIVE-Brake	49-51
Aluminium-Roller Guide PROLINE with ACTIVE-Brake	59-61
PASSIVE-Brakes	
Multi-Brake: PASSIVE-Brake with Plain Bearing Guide SLIDELINE	93-96
Multi-Brake: PASSIVE-Brake with Aluminium-Roller Guide PROLINE	97-99
OSP –Accessories	
Overview	101-102
Clevis Mounting	103-104
End Cap Mounting	105
Mid-Section Support	106
Mountings for Linear Drives fitted with OSP-Guides	107-115
Inversion Mounting	117
Adaptor Profile	118
T-Slot Profile	119
Connection Profile	120
Duplex Connection	121
Multiplex Connection	122
Magnetic Switches	
– Standard Version	123-125
– T-Slot Version	127-130
– ATEX-Version Ⓔx	131-133
Cable Cover	126
Displacement Measuring Systems ORIGA SENSOFLEX	
Overview	135-136
– Series SFI-plus	137-139

The right to introduce technical modifications is reserved

ONE CONCEPT
– THREE DRIVE OPTIONS

Based on the ORIGA rodless cylinder, proven in world wide markets, Parker Origa now offers the complete solution for linear drive systems. Designed for absolute reliability, high performance, ease of use and optimised engineering the ORIGA SYSTEM PLUS satisfies even the most demanding applications.

ORIGA SYSTEM PLUS

is a totally modular concept which offers the choice of pneumatic or electric actuation, with guidance and control modules to suit the exact needs of individual installations.

The actuators at the core of the system all have a common aluminium extruded profile, with double dovetail mounting rails on three sides, these are the principle building blocks of the system to which all modular options are directly attached.

SYSTEM MODULARITY

- **Pneumatic Drive**
  – For all round versatility and convenience, combining ease of control and broad performance capability. Ideally suited for point-to point operations, reciprocating movements and simple traverse / transfer applications.
- **Electric Screw Drive**
  – For high force capability and accurate path and position control.

For additional informations on electrical linear drives OSP-E, please refer to catalogue P-A4P017E.

- **Electric Belt Drive**
  – For high speed applications, accurate path and position control and longer strokes.

For additional informations on electrical linear drives OSP-E, please refer to catalogue P-A4P017E.

- Different guidance options provide the necessary level of precision, performance and duty for various applications.
- Compact solutions, which are simple to install and can be easily retrofitted.
- Valves and control options can be directly mounted to the actuator system.
- Diverse mounting options to provide total installation flexibility.

INTRODUCTION OSP - CONCEPT

*** Information on electrical linear drives series OSP-E, please refer to catalogue P-A4P017E**

Basic Linear Drive Standard Version ● Series OSP-P ● Series OSP-E* Belt drive Belt drive with integrated Guides Vertical belt drive with recirculating ball bearing guide ● Series OSP-E* Screw drive (Ball Screw, Trapezoidal Screw)	
Air Connection on the End-face or both at One End ● Series OSP-P	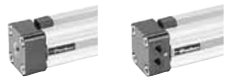
Long-Stroke Cylinders for strokes up to 41 m ● Series OSP-P	
Clean Room Cylinder certified to DIN EN ISO 146644-1 ● Series OSP-P ● Series OSP-E..SB	
Products for ATEX Areas ● Series OSP-P Rodless Cylinders	
Products for ATEX Areas ● Series OSP-P Rodless Cylinders with Linear Guide BASIC GUIDE	
Products for ATEX Areas ● Series OSP-P Rodless Cylinders with Linear Guide SLIDELINE	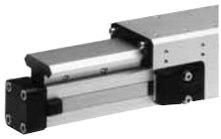
Bi-parting Version ● Series OSP-P	
Integrated 3/2 Way Valves ● Series OSP-P	
Clevis Mounting ● Series OSP-P ● Series OSP-E Belt drive* ● Series OSP-E Screw drive*	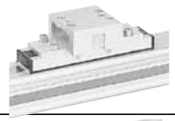
End Cap Mounting ● Series OSP-P ● Series OSP-E Belt drive* ● Series OSP-E Screw drive*	
Mid-Section Support ● Series OSP-P ● Series OSP-E Belt drive* ● Series OSP-E Screw drive*	
Inversion Mounting ● Series OSP-P ● Series OSP-E Belt drive* ● Series OSP-E Screw drive*	

BASIC GUIDE ● Series OSPP-BG	
Duplex Connection ● Series OSP-P	
Multiplex-Connection ● Series OSP-P	
Linear Guides – SLIDELINE ● Series OSP-P ● Series OSP-E Screw drive*	
Linear Guides – POWERSLIDE ● Series OSP-P ● Series OSP-E Belt drive* ● Series OSP-E Screw drive*	
Linear Guides – PROLINE ● Series OSP-P ● Series OSP-E Belt drive* ● Series OSP-E Screw drive*	
Linear Guides – STARLINE ● Series OSP-P	
Linear Guides – KF ● Series OSP-P	
Heavy Duty Linear Guides – HD ● Series OSP-P ● Series OSP-E Screw drive*	
Intermediate stop module – ZSM ● Series OSP-P	
Brakes ● ACTIVE Brakes ● Passive Brakes	
Magnetic Switches ● Series OSP-P ● Series OSP-E Belt drive* ● Series OSP-E Screw drive* ● ATEX-Versions	
SENSOFLEX–Measuring system ● Series SFI-plus	
Variable Stop VS ● Series OSP-P with Linear Guide STL, KF, HD	

The right to introduce technical modifications is reserved

Linear Drives	OSP-P10	OSP-P16	OSP-P25	OSP-P32	OSP-P40	OSP-P50	OSP-P63	OSP-P80
Theoretical force at 6 bar [N]	47	120	295	483	754	1178	1870	3010
Effective force at 6 bar [N]	32	78	250	420	640	1000	1550	2600
Velocity v [m/s]	>0.005	>0.005	>0.005	>0.005	>0.005	>0.005	>0.005	>0.005
Magnetic piston (three sides)	X	❑	❑	❑	❑	❑	❑	❑
Lubrication - prelubricated	❑	❑	❑	❑	❑	❑	❑	❑
Multiple air ports (4 x 90°)	X	❑	❑	❑	❑	❑	❑	❑
Both Air Connections at End-face	X	❍	❍	❍	❍	❍	❍	❍
Air Connection on the End-face	X	❍	❍	❍	❍	❍	❍	❍
Cushioning	❑	❑	❑	❑	❑	❑	❑	❑
Cushioning length [mm]	2,50	11	17	20	27	30	32	39
Stroke length [mm]	1-6000	1-6000	1-6000	1-6000	1-6000	1-6000	1-6000	1-6000
Pressure range p_{max} [bar]	8.0	8.0	8.0	8.0	8.0	8.0	8.0	8.0
Temperature range [°C]	-10–+80	-10–+80	-10–+80	-10–+80	-10–+80	-10–+80	-10–+80	-10–+80
Viton / chemical resistance	❍	❍	❍	❍	❍	❍	❍	❍
Stainless steel parts	❍	❍	❍	❍	❍	❍	❍	❍
Clevis Mounting	❍	❍	❍	❍	❍	❍	❍	❍
Slow speed lubrication	❍	❍	❍	❍	❍	❍	❍	❍
Duplex Connection / Multiplex Connection	X	on request	❍	❍	❍	❍	on request	on request
Tandem piston	❍	❍	❍	❍	❍	❍	❍	❍
Basic Cylinder								
F [N]	20	120	300	450	750	1200	1650	2400
M_x [Nm]	0.2	0.45	1.5	3	6	10	12	24
M_y [Nm]	1	4	15	30	60	115	200	360
M_z [Nm]	0.3	0.5	3	5	8	15	24	48
Basic Guide								
F [N]	X	X	590	850	1600	X	X	X
M_x [Nm]	X	X	10	17	39	X	X	X
M_y [Nm]	X	X	28	43	110	X	X	X
M_z [Nm]	X	X	28	43	110	X	X	X
Slideline								
F [N]	X	325	675	925	1500	2000	2500	2500
M_x [Nm]	X	6	14	29	50	77	120	120
M_y [Nm]	X	11	34	60	110	180	260	260
M_z [Nm]	X	11	34	60	110	180	260	260
Proline								
F [N]	X	542	857	1171	2074	3111	X	X
M_x [Nm]	X	8	16	29	57	111	X	X
M_y [Nm]	X	12	39	73	158	249	X	X
M_z [Nm]	X	12	39	73	158	249	X	X
Powerslide								
F [N]	X	1400	1400-3000	1400-3000	3000	3000-4000	X	X
M_x [Nm]	X	14	14-65	20-65	65-90	90-140	X	X
M_y [Nm]	X	45	63-175	70-175	175-250	250-350	X	X
M_z [Nm]	X	45	63-175	70-175	175-250	250-350	X	X
Starline								
F [N]	X	1000	3100	3100	4000-7500	4000-7500	X	X
M_x [Nm]	X	15	50	62	150	210	X	X
M_y [Nm]	X	30	110	160	400	580	X	X
M_z [Nm]	X	30	110	160	400	580	X	X
– variable Stop	X	❍	❍	❍	❍	❍	X	X

Linear Drives	OSP-P10	OSP-P16	OSP-P25	OSP-P32	OSP-P40	OSP-P50	OSP-P63	OSP-P80
KF-Guide								
F [N]	X	1000	3100	3100	4000-7100	4000-7500	X	X
M_x [Nm]	X	12	35	44	119	170	X	X
M_y [Nm]	X	25	90	133	346	480	X	X
M_z [Nm]	X	25	90	133	346	480	X	X
– variable Stop	X	❍	❍	❍	❍	❍	X	X
HD Heavy Duty Guide								
F [N]	X	X	6000	6000	15000	18000	X	X
M_x [Nm]	X	X	260	285	800	1100	X	X
M_y [Nm]	X	X	320	475	1100	1400	X	X
M_z [Nm]	X	X	320	475	1100	1400	X	
– Variable Stop	X	X	❍	❍	❍	❍	X	X
– Intermediate stop module	X	X	❍	X	X	X	X	X
ACTIVE Brake								
Braking force at 6 bar (brake surface dry) [N]	X	X	350	590	900	1400	2170	4000
Slideline SL / Proline PL with Brakes								
ACTIVE Brake								
SL Braking force at 6 bar (brake surface dry [N]	X	X	325	545	835	1200	X	X
PL Braking force at 6 bar (brake surface dry) [N]	X	X	on request	on request	on request	on request	X	X
Passive Brake Multibrake								
SL Braking force (brake surface dry) [N]	X	X	470	790	1200	1870	2900	2900
PL Braking force (brake surface dry) [N]	X	X	315	490	715	1100	–	–
Magnetic Switches								
Standard-Version	❍	❍	❍	❍	❍	❍	❍	❍
T-Slot-Version	❍	❍	❍	❍	❍	❍	❍	❍
ATEX-Version for EX- Areas Ex	❍	❍	❍	❍	❍	❍	❍	❍
Displacement measuring systems								
SFI-plus incremental	X	X	❍	❍	❍	❍	❍	❍
Integrated valves 3/2 WV NO VOE	X	X	❍	❍	❍	❍	on request	on request
Mountings								
End Cap Mounting / Mid-Section Support	❍	❍	❍	❍	❍	❍	❍	❍
Inversion Mounting	X	❍	❍	❍	❍	❍	❍	❍
Shock absorber for intermediate positioning	X	X	on request	on request	on request	on request	X	X
Adaptor Profile / T-Slot Profile	X	❍	❍	❍	❍	❍	❍/X	X
Special Cylinders								
Special Pneumatical Cushioning System	X	on request	on request	on request	on request	on request	X	X
Clean Room Cylinders to DIN EN ISO 14644-1	X	❍	❍	❍	X	X	X	X
Long-Stroke Cylinders (max. stroke length 41 m)	X	X	X	X	X	❍	❍	❍
ATEX-Version for EX-Areas Ex	❍	❍	❍	❍	❍	❍	❍	❍
Bi-parting Version	X	X	X	X	❍	X	X	X
High-Speed up to 30 m/s	X	on request	on request	on request	X	X	X	X

❑ = Standard version
▲ = longer strokes on request
❊ = other temperature ranges on request
❍ = Option
X = not applicable

The right to introduce technical modifications is reserved

CONTROL EXAMPLES FOR OSP-P

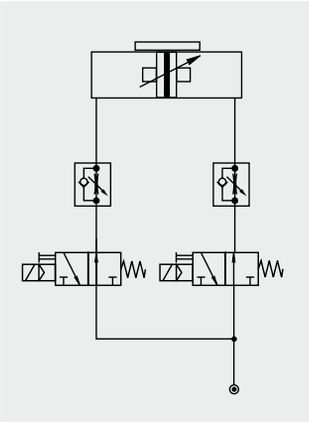

Circuit diagram for end of stroke application. Intermediate positioning is also possible.

The cylinder is controlled by two 3/2-way valves (normally open). The speed can be adjusted independantly for both directions.

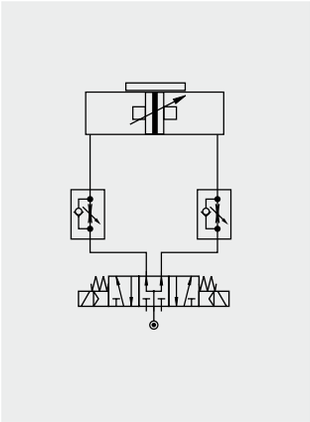

Circuit diagram for end of stroke application. Intermediate positioning is also possible.

The cylinder is controlled by a 5/3-way valve (middle position pressurized).
The speed can be adjusted independantly for both directions.

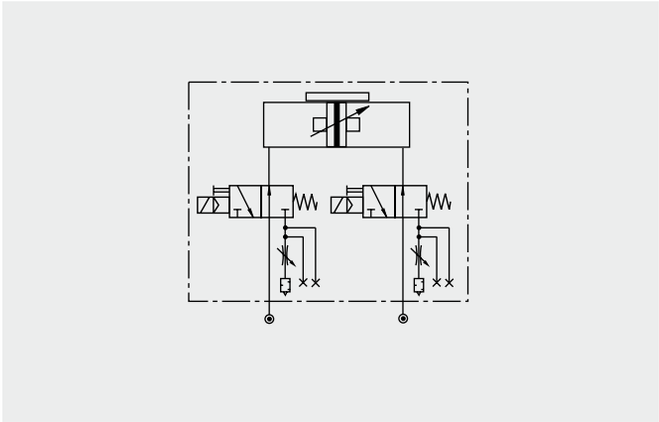

The optional integrated VOE Valves offer optimal control, and allow accurate positioning of intermediate positions and the lowest possible speeds.

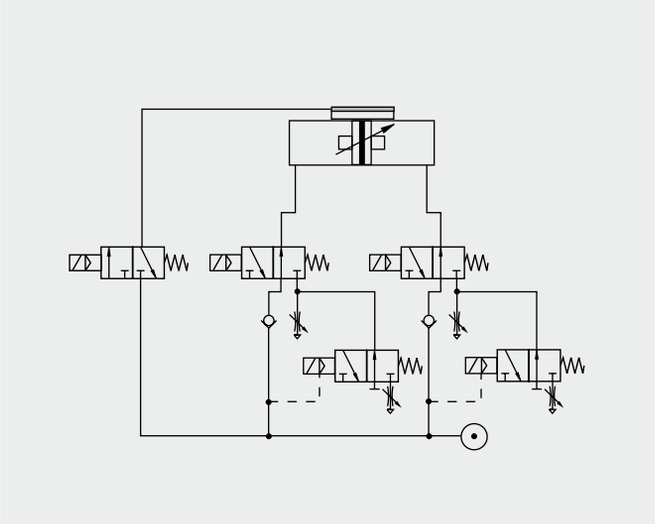

Fast/Slow speed cycle control with pneumatic brake for accurate positioning at high velocities.
Additional 3/2-way valves with adjustable throttle valves at the exhaust of the standard directional control valves for two displacement speeds in each direction of the piston‘s travel.
The valve controlling the brake is activated after the slow speed cycle is activated

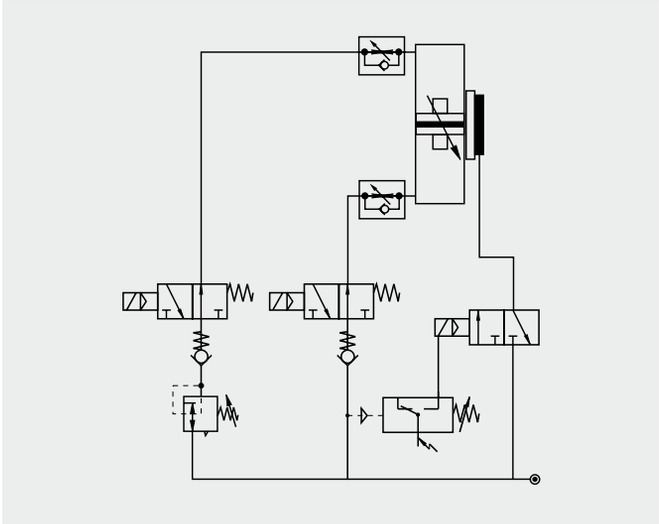

The combination of an OSP-cylinder with the passive MULTIBRAKE as shown here, allows accurate positioning and safety in case of loss of pneumatic air pressure.

OSP-P APPLICATION EXAMPLES

ORIGA SYSTEM PLUS – rodless linear drives offer maximum flexibility for any application.

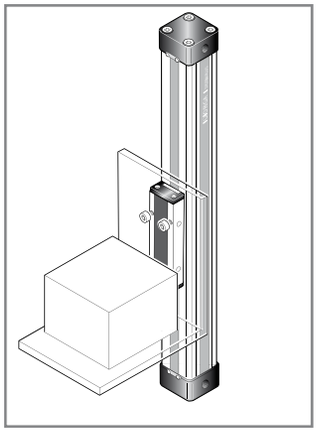

The high load capacity of the piston can cope with high bending moments without additional guides.

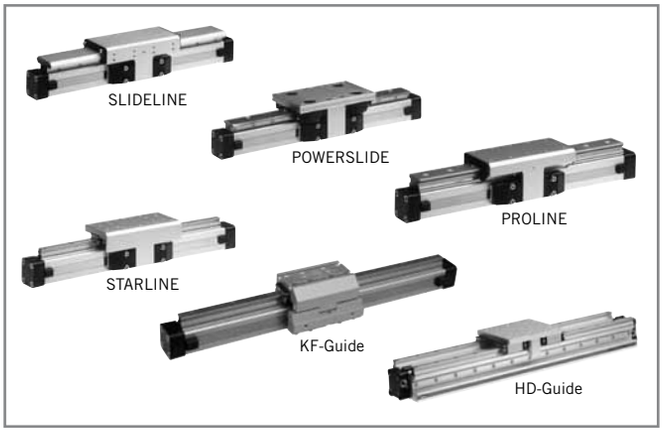

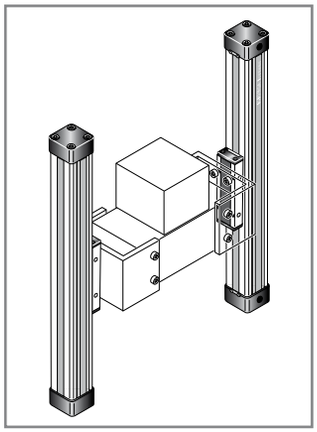

The mechanical design of the OSP-P allows synchronised movement of two cylinders.

Integrated guides offer optimal guidance for applications requiring high performance, easy assembly and maintenance free operation.

Optimal system performance by combining multi-axis cylinder combinations.

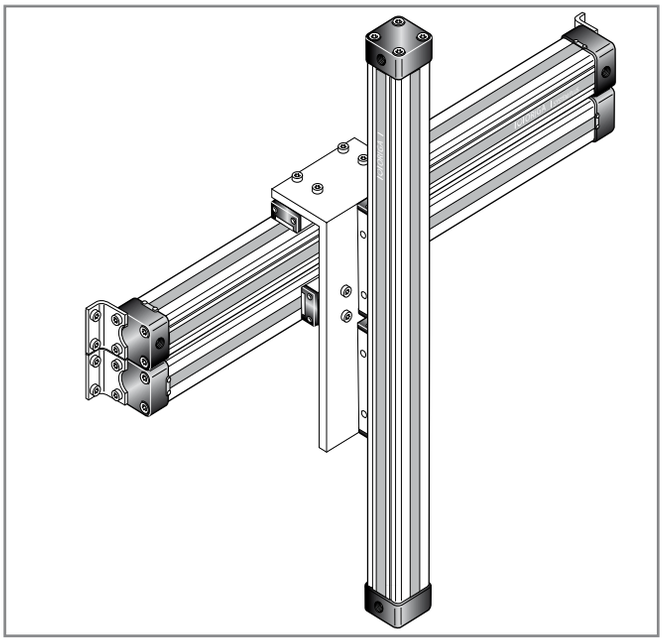

When using external guides, the clevis mounting is used to compensate for deviations in parallelism.

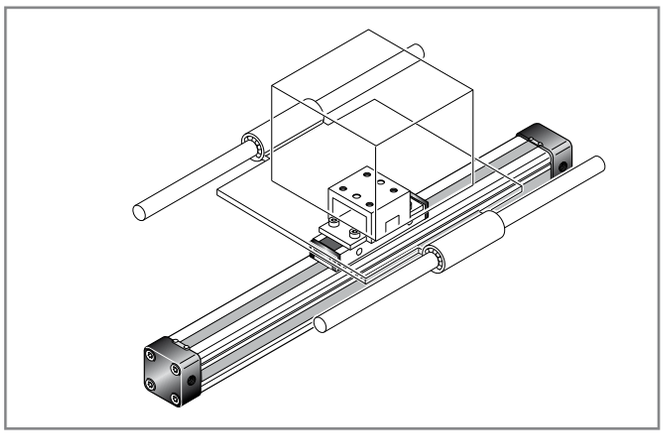

For further information and assembly instructions, please contact your local Parker Origa dealer.

The right to introduce technical modifications is reserved

Rodless Pneumatic Cylinders
Series OSP-P

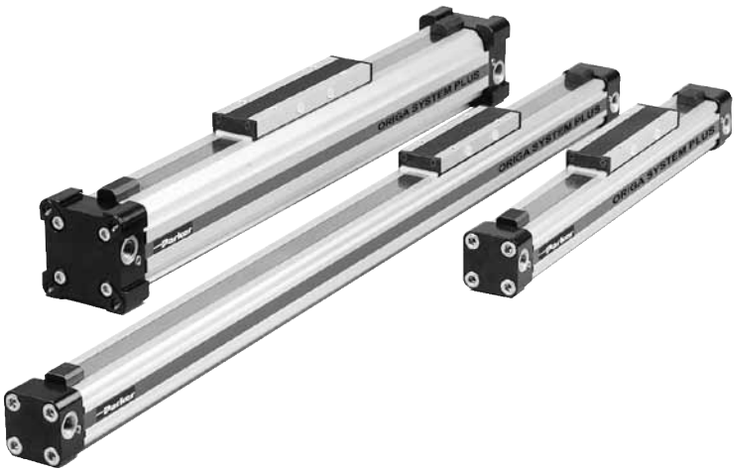

Contents

Description	Page
Standard Cylinders	
Overview	9-13
Technical Data	15-17
Dimensions	18-23
Order Instructions	24
Long-Stroke Cylindes	
Technical Data	25-26
Dimensions	27-28
Order Instructions	29
Clean Room Cylinders	
Technical Data	31-32
Dimensions	33
Order Instructions	34
Cylinders ATEX-Version Ex	
Technical Data	35
Dimensions	16-21
Order Instructions	36
Cylinders for synchronized bi-parting movements	
Technical Data	37
Dimensions	38
Order Instructions	38
BASIC GUIDE BG	
Technical Data	39
Dimensions	42
Order Instructions	45

The right to introduce technical modifications is reserved

ORIGA SYSTEM PLUS – INNOVATION FROM A PROVEN DESIGN

A completely new generation of linear drives which can be simply and neatly integrated into any machine layout.

A NEW MODULAR LINEAR DRIVE SYSTEM

With this second generation linear drive Parker Origa offers design engineers complete flexibility. The well known ORIGA cylinder has been further developed into a combined linear actuator, guidance and control package. It forms the basis for the new, versatile ORIGA SYSTEM PLUS linear drive system.

All additional functions are designed into modular system components which replace the previous series of cylinders.

MOUNTING RAILS ON 3 SIDES

Mounting rails on 3 sides of the cylinder enable modular components such as linear guides, brakes, valves, magnetic switches etc. to be fitted to the cylinder itself. This solves many installation problems, especially where space is limited.

The modular system concept forms an ideal basis for additional customer-specific functions.

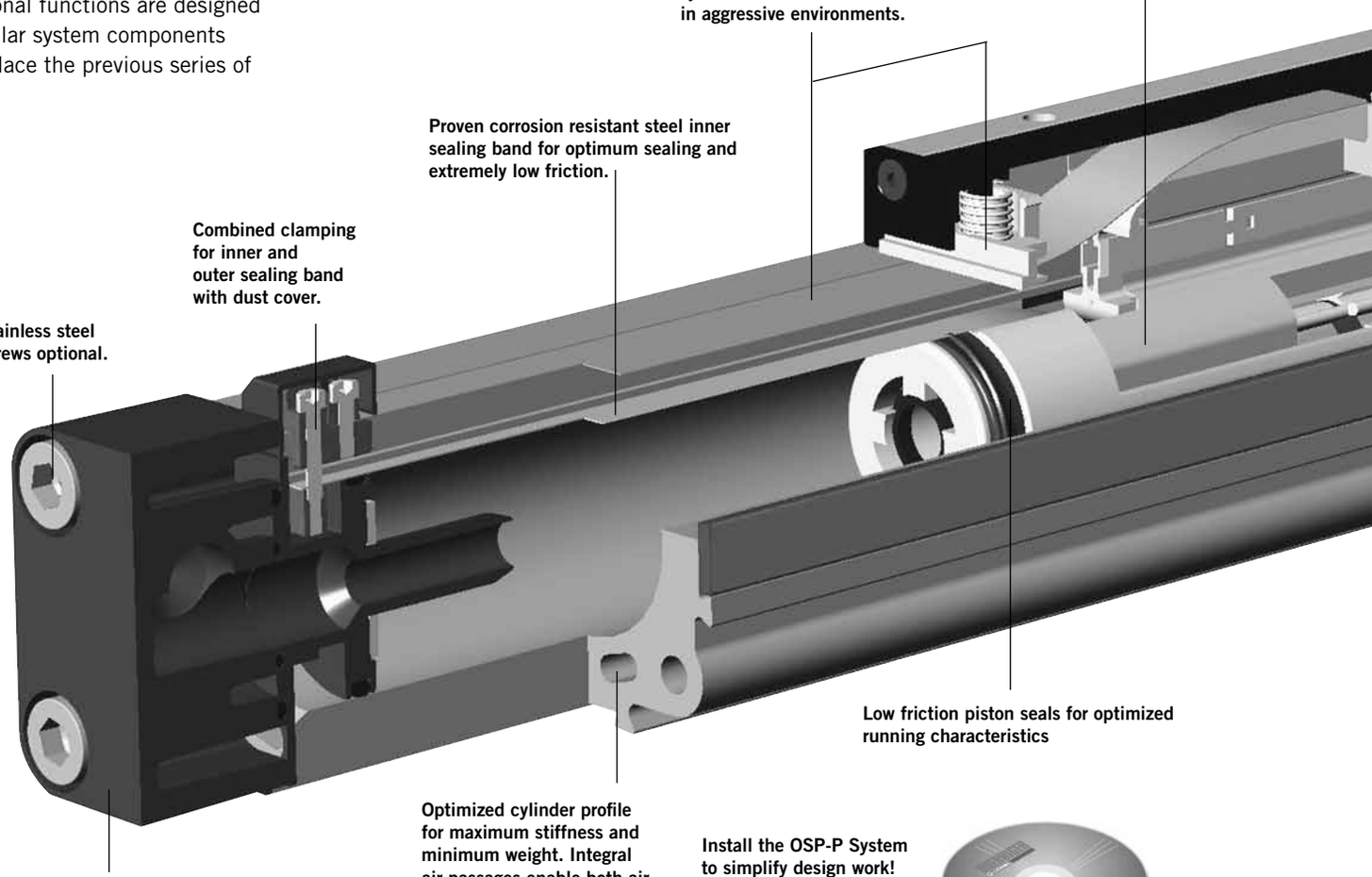

Install the OSP-P System to simplify design work! The files are compatible with all popular CAD systems and package hardware.

Clean Room Version
certified to DIN EN ISO 14644-1

Rodless Cylinder
for synchronized bi-parting movements

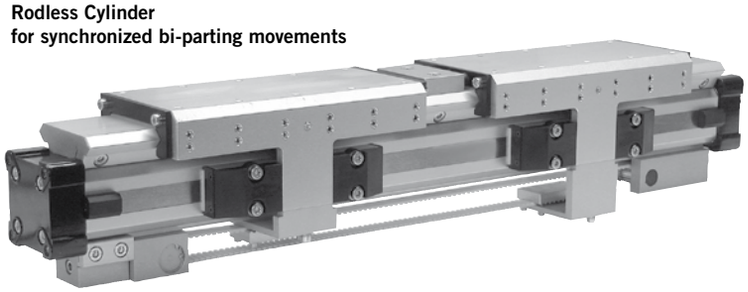

New low profile
piston/carrier design.

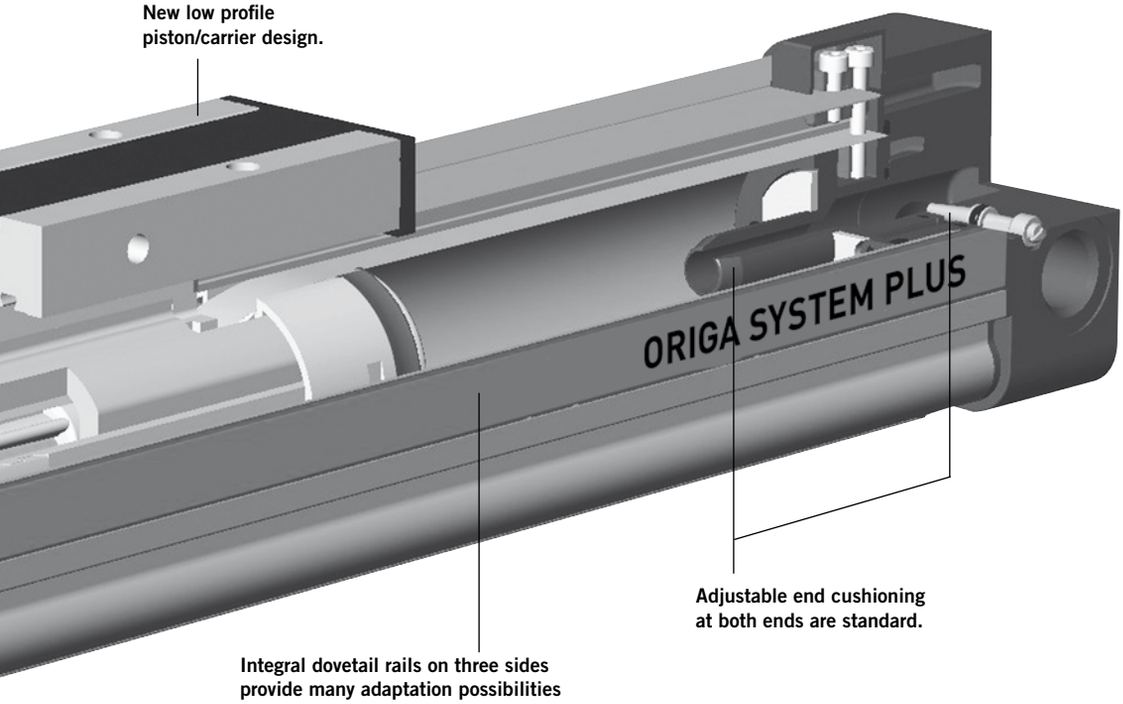

Adjustable end cushioning
at both ends are standard.

Integral dovetail rails on three sides
provide many adaptation possibilities
(linear guides, magnetic switches, etc.).

Modular system components
are simply clamped on.

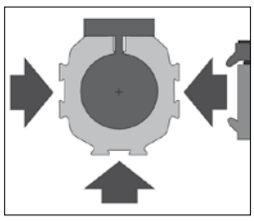

INTEGRATED VOE VALVES
The complete compact solution for optimal cylinder control.

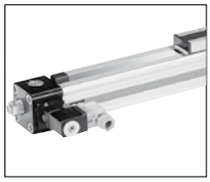

SENSOFLEX
SFI-plus incremental measuring system with 0.1 (1.0) mm resolution.

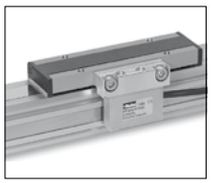

BASIC GUIDE
Compact, robust plain bearing guide for medium loads.

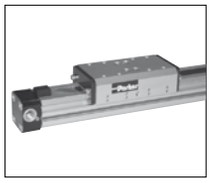

SLIDELINE
Guide system for moderate loads. Optional with Active- / Passive-Brake.

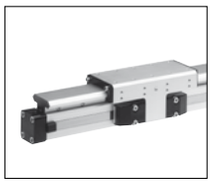

POWERSLIDE
Roller guide for high loads and rough conditions.

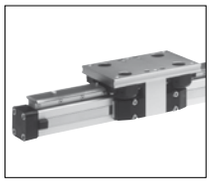

PROLINE
The compact aluminium roller guide for high loads and velocities.
Optional with Active- / Passive- Brake.

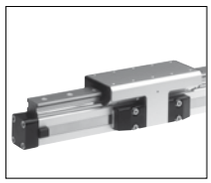

STARLINE
Recirculating ball bearing guide for very high loads and precision.

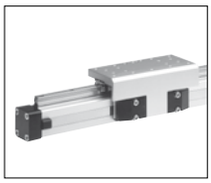

KF GUIDE
Recirculating ball bearing guide – the mounting dimensions correspond to FESTO Type: DGPL-KF

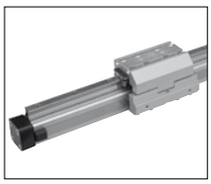

HEAVY DUTY GUIDE HD
for heavy duty applications.

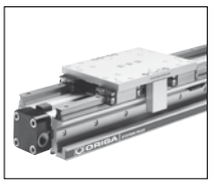

VARIABLE STOP VS
The variable stop provides simple stroke limitation.

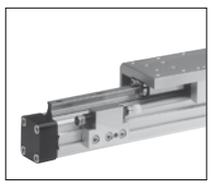

PASSIVE BRAKE
reacts automatically to pressure failure.

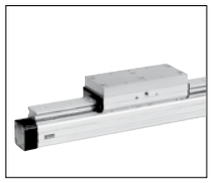

ACTIVE BRAKE
pneumatic brake for secure, positive stopping at any position.

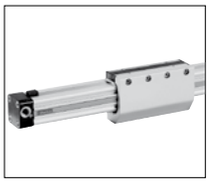

OPTIONS AND ACCESSORIES FOR SYSTEM VERSATILITY

SERIES OSP-P

STANDARD VERSIONS OSP-P10 to P80

Page 15-17

Standard carrier with integral guidance. End cap can be rotated 4 x 90° to position air connection on any side.
Magnetic piston as standard.
Dovetail profile for mounting of accessories and the cylinder itself.

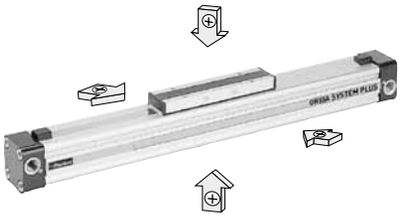

LONG-STROKE VERSION
Page 25-29

For extremely long strokes up to max. 41 m

BASIC CYLINDER OPTIONS

CLEAN ROOM CYLINDERS
Page 31-34

For use in clean room applications, certified with the IPA-Certificate (to DIN EN ISO 14644-1).
The special design of the linear drive enables all emissions to be led away.

ATEX-Version
Page 35-36

For use in Ex-Areas

STAINLESS VERSION

For use in constantly damp environments.
All screws are A2 quality stainless steel (material no.1.4301 / 1.4303)

SLOW SPEED OPTIONS

Specially formulated grease lubrication facilitates slow, smooth and uniform piston travel in the speed range from 0.005 to 0.2 m/s.
Minimum achievable speeds are dependent on several factors. Please consult our technical department.
Slow speed lubrication in combination with Viton® on demand.
Oil free operation preferred.

VITON® VERSION

For use in an environment with high temperatures or in chemically aggressive areas.
All seals are made of Viton®.
Sealing bands: Stainless steel.

END-FACE AIR CONNECTION

Page 20

To solve special installation problems.

BOTH AIR CONNECTIONS AT ONE END

Page 21

For simplified tubing connections and space saving.

INTEGRATED VOE VALVES

Page 22

The complete compact solution for optimal cylinder control.

DUPLEX CONNECTION

Page 121

The duplex connection combines two OSP-P cylinders of the same size into a compact unit with high performance.

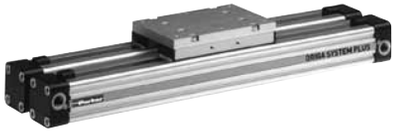

MULTIPLEX CONNECTION

Page 122

The multiplex connection combines two or more OSP-P cylinders of the same size into one unit.
The orientation of the carriers can be freely selected.

MAGNETIC SWITCHES
TYPE RS, ES, RST, EST

Page 123-133

For electrical sensing of end and intermediate piston positions, also in EX-Areas.

MOUNTINGS FOR OSP-P10 UP TO P80

CLEVIS MOUNTING

Page 103-104

Carrier with tolerance and parallelism compensation for driving loads supported by external linear guides.

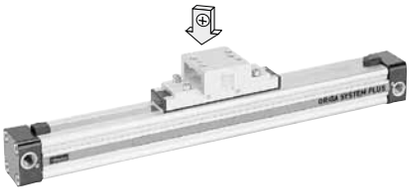

END CAP MOUNTING

Page 105

For end-mounting of the cylinder.

MID-SECTION SUPPORT

Page 106

For supporting long cylinders or mounting the cylinder by its dovetail rails.

INVERSION MOUNTING

Page 117

The inversion mounting transfers the driving force to the opposite side, e. g. for dirty environments.

The right to introduce technical modifications is reserved

Rodless Pneumatic Cylinder

ø 10-80 mm

OSP
ORIGA SYSTEM PLUS

Series OSP-P..

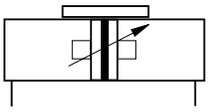

Characteristics				Pressures quoted as gauge pressure
Characteristics		Symbol	Unit	Description
General Features				
Type				Rodless cylinder
Series				OSP-P
System				Double-acting, with cushioning, position sensing capability
Mounting				See drawings
Air Connection				Threaded
Ambient temperature range		T_{min} T_{max}	°C °C	-10 +80 — Other temperature ranges on request
Weight (mass)			kg	See table below
Installation				In any position
Medium				Filtered, unlubricated compressed air (other media on request)
Lubrication				Permanent grease lubrication (additional oil mist lubrication not required) Option: special slow speed grease
Material	Cylinder Profile			Anodized aluminium
	Carrier (piston)			Anodized aluminium
	End caps			Aluminium, lacquered / Plastic (P10)
	Sealing bands			Corrosion resistant steel
	Seals			NBR (Option: Viton®)
	Screws			Galvanized steel Option: stainless steel
	Dust covers, wipers			Plastic
Max. operating pressure		p_{max}	bar	8

Weight (mass) [kg]

Series (Basic cylinder)	Weight (mass) [kg] At 0 mm stroke	per 100 mm stroke
OSP-P10	0.087	0.052
OSP-P16	0.22	0.1
OSP-P25	0.65	0.197
OSP-P32	1.44	0.354
OSP-P40	1.95	0.415
OSP-P50	3.53	0.566
OSP-P63	6.41	0.925
OSP-P80	12.46	1.262

Size Comparison

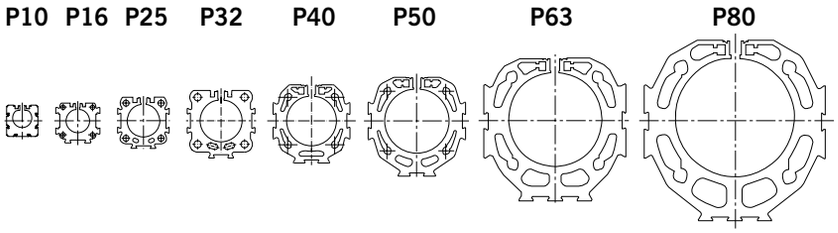

For **linear guides** see from page 47
For **magnetic switches** see from page 123
For **mountings** and **accessories** see from page 101

Standard Versions:
- Double-acting with adjustable end cushioning
- With magnetic piston for position sensing

Long-Stroke Cylinders for stroke lengths up to 41 m
(see page 25-29)

Special Versions:
- with special pneumatical cushioning system (on request)
- Clean room cylinders (see page 31-34)
- ATEX-Version Ex (see page 35-36)
- Stainless steel screws
- Slow speed lubrication
- Viton® seals
- Both air connections on one end
- Air connection on the end-face
- Integrated Valves

- End cap can be rotated 4 x 90° to position air connection as desired
- Free choice of stroke length up to 6000 mm, Long-Stroke version (Ø50-80mm) for stroke lengths up to 41 m

The right to introduce technical modifications is reserved

Loads, Forces and Moments

Choice of cylinder is decided by:

- Permissible loads, forces and moments
- Performance of the pneumatic end cushions. The main factors here are the mass to be cushioned and the piston speed at start of cushioning (unless external cushioning is used, e. g. hydraulic shock absorbers).

The adjacent table shows the maximum values for light, shock-free operation, which must not be exceeded even in dynamic operation. **Load and moment data are based on speeds v ≤ 0.5 m/s.**

When working out the action force required, it is essential to take into account the friction forces generated by the specific application or load.

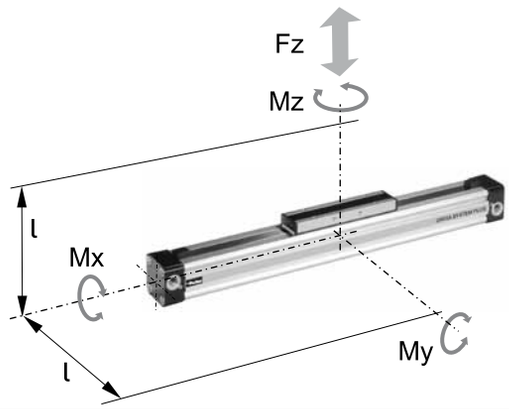

M = F ·l
Bending moments are calculated from the centre of the linear actuator

Cylinder-Series [mm Ø]	Theoretical Action Force at 6 bar [N]	effektive Action Force F_A at 6 bar [N]	max. Moments Mx [Nm]	My [Nm]	Mz [Nm]	max. Load F [N]	Cushion Length [mm]
OSP-P10	47	32	0.2	1	0.3	20	2.5 *
OSP-P16	120	78	0.45	4	0.5	120	11
OSP-P25	295	250	1.5	15	3	300	17
OSP-P32	483	420	3	30	5	450	20
OSP-P40	754	640	6	60	8	750	27
OSP-P50	1178	1000	10	115	15	1200	30
OSP-P63	1870	1550	12	200	24	1650	32
OSP-P80	3016	2600	24	360	48	2400	39

* A rubber element (non-adjustable) is used for end cushioning.
To deform the rubber element enough to reach the absolute end position would require a Δp of 4 bar!

Cushioning Diagram

Work out your expected moving mass and read off the maximum permissible speed at start of cushioning. Alternatively, take your desired speed and expected mass and find the cylinder size required.
Please note that piston speed at start of cushioning is typically ca. 50 % higher than the average speed, and that it is this higher speed which determines the choice of cylinder. If these maximum permissible values are exceeded, additional shock absorbers must be used.

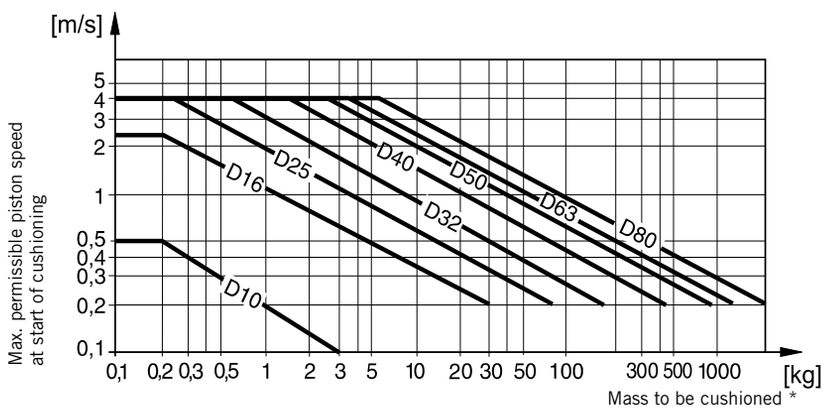

Horizontal application, pressure p = 6 bar

* For cylinders with linear guides or brakes, please be sure to take the mass of the carriage or the brake housing into account.

If the permitted limit values are exceeded, either additional shock absorbers should be fitted in the area of the centre of gravity or you can consult us about our special cushioning system
– we shall be happy to advise you on your specific application.

Permissible Support Spacings: OSP - P10 - P32

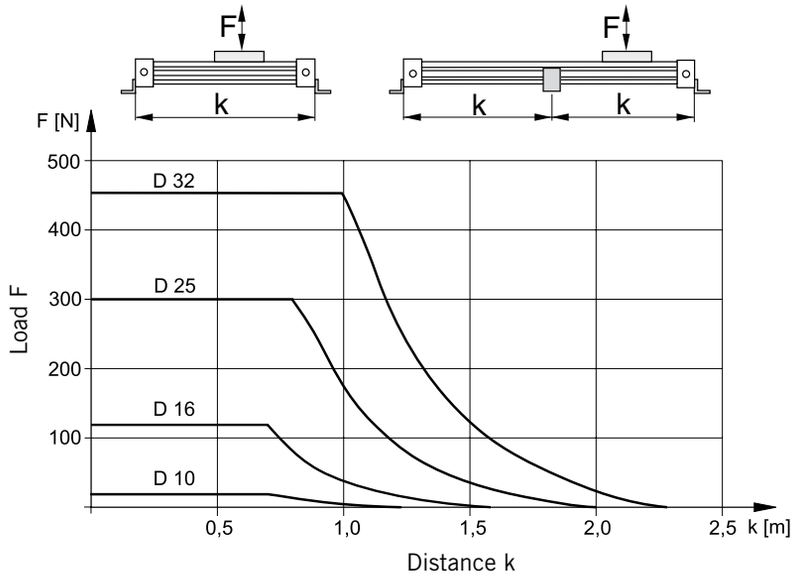

Permissible Support Spacings: OSP - P40 - P80

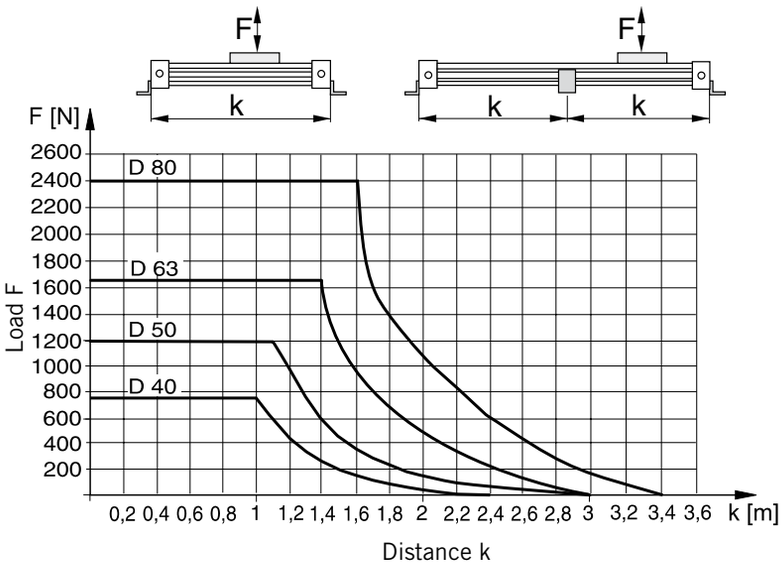

Mid-Section Supports

To avoid excessive bending and oscillation of the cylinder, mid-section supports are required dependent on specified stroke lengths and applied loads. The diagrams show the maximum possible support spacings depending on the load.
Bending up to max. 0.5 mm is permissible between supports. The mid-section supports are clamped on to the dovetail profile of the cylinder tube. They are also able to take the axial forces.
For types and dimensions see page 106.

The right to introduce technical modifications is reserved

Cylinder
Stroke and Dead Length A

- Free choice of stroke length up to 6000 mm in 1 mm steps.
- Longer strokes on request

Dimensions of Basic Cylinder OSP-P10

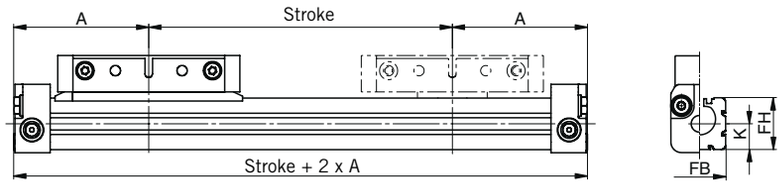

Tandem Cylinder

Two pistons are fitted: dimension "Z" is optional. (Please note minimum distance "Zmin").

- Free choice of stroke length up to 6000 mm in 1 mm steps
- Longer strokes on request
- **Stroke length to order is stroke + dimension "Z"**

Please note:

To avoid multiple actuation of magnetic switches, the second piston is not equipped with magnets.

* Piston with magnet

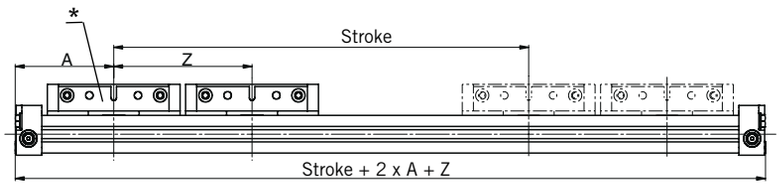

End Cap/Air Connection Series OSP -P10

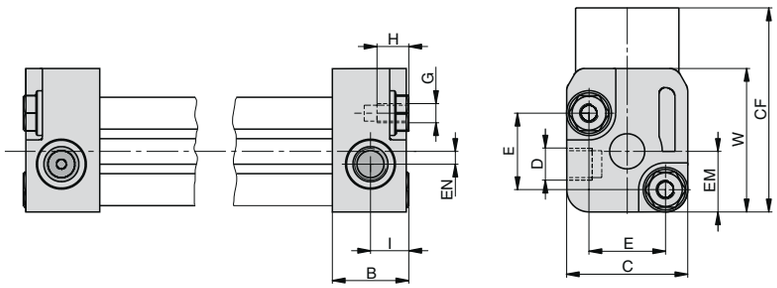

Carrier Series OSP-P10

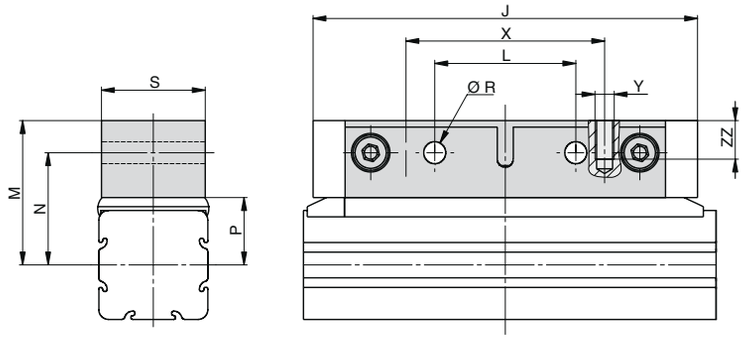

Dimension Table [mm]

Series	A	B	C	D	E	G	H	I	J	K	L	M	N	P	R	S	W	X	Y	Z_{min}	CF	EM	EN	FB	FH	ZZ
OSP-P10	44.5	12	19	M5	12	M3	5	6	60	8.5	22	22.5	17.5	10.5	3.4	16	22.5	31	M3	64	32	9.5	2	17	17	6

Dimensions of Basic Cylinder OSP - P16-P80

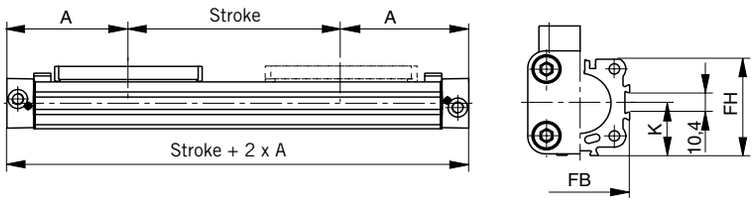

Cylinder
Stroke and Dead Length A

- Free choice of stroke length up to 6000 mm in 1 mm steps.
- Longer strokes on request.

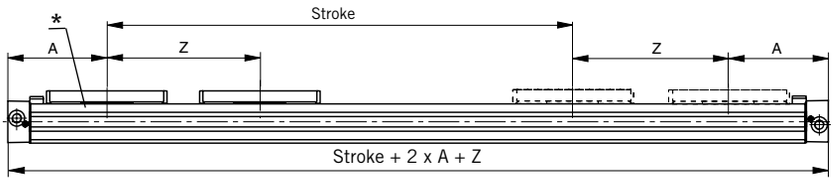

Tandem Cylinder

Two pistons are fitted: dimension "Z" is optional. (Please note minimum distance "Zmin").

- Free choice of stroke length up to 6000 mm in 1 mm steps
- Longer strokes on request
- **Stroke length to order is stroke + dimension "Z"**

Please note:

To avoid multiple actuation of magnetic switches, the second piston is not equipped with magnets.

* Piston with magnet

End Cap/Air Connection can be rotated 4 x 90°
Series OSP-P16 to P32

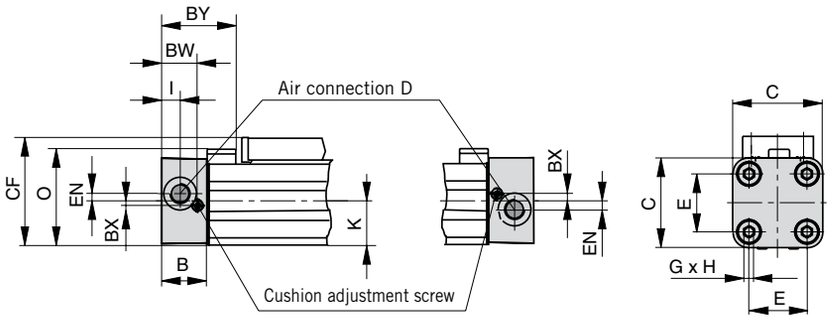

End Cap/Air Connection can be rotated 4 x 90°
Series OSP-P40 to P80

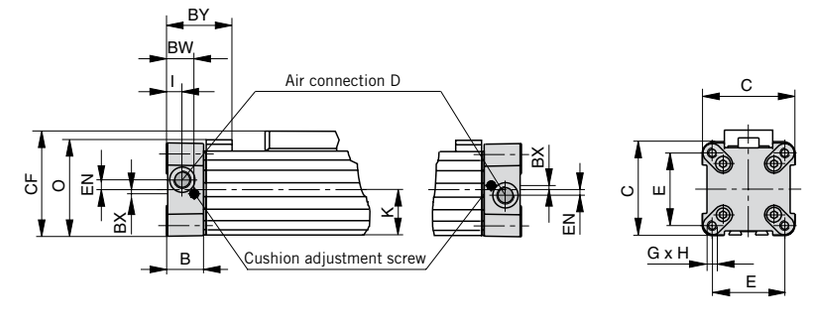

Carrier
Series OSP-P16 to P80

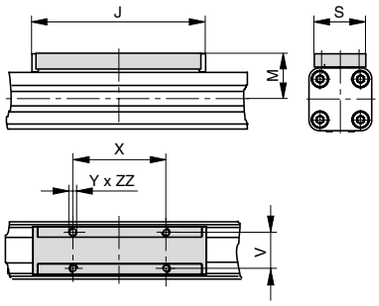

Dimension Table [mm]

Series	A	B	C	D	E	G	H	I	J	K	M	O	S	V	X	Y	Z_{min}	BW	BX	BY	CF	EN	FB	FH	ZZ
OSP-P16	65	14	30	M5	18	M3	9	5.5	69	15	23	33.2	22	16.5	36	M4	81	10.8	1.8	28.4	38	3	30	27.2	7
OSP-P25	100	22	41	G1/8	27	M5	15	9	117	21.5	31	47	33	25	65	M5	128	17.5	2.2	40	52.5	3.6	40	39.5	8
OSP-P32	125	25.5	52	G1/4	36	M6	15	11.5	152	28.5	38	59	36	27	90	M6	170	20.5	2.5	44	66.5	5.5	52	51.7	10
OSP-P40	150	28	69	G1/4	54	M6	15	12	152	34	44	72	36	27	90	M6	212	21	3	54	78.5	7.5	62	63	10
OSP-P50	175	33	87	G1/4	70	M6	15	14.5	200	43	49	86	36	27	110	M6	251	27	–	59	92.5	11	76	77	10
OSP-P63	215	38	106	G3/8	78	M8	21	14.5	256	54	63	107	50	34	140	M8	313	30	–	64	117	12	96	96	16
OSP-P80	260	47	132	G1/2	96	M10	25	22	348	67	80	133	52	36	190	M10	384	37.5	–	73	147	16.5	122	122	20

The right to introduce technical modifications is reserved

Air Connection on the End-face

In some situations it is necessary or desirable to fit a special end cap with the air connection on the end-face instead of the standard end cap with the air connection on the side. The special end cap can also be rotated 4 x 90° to locate the cushion adjustment screw as desired. Supplied in pairs.

Series OSP-P16 to P32

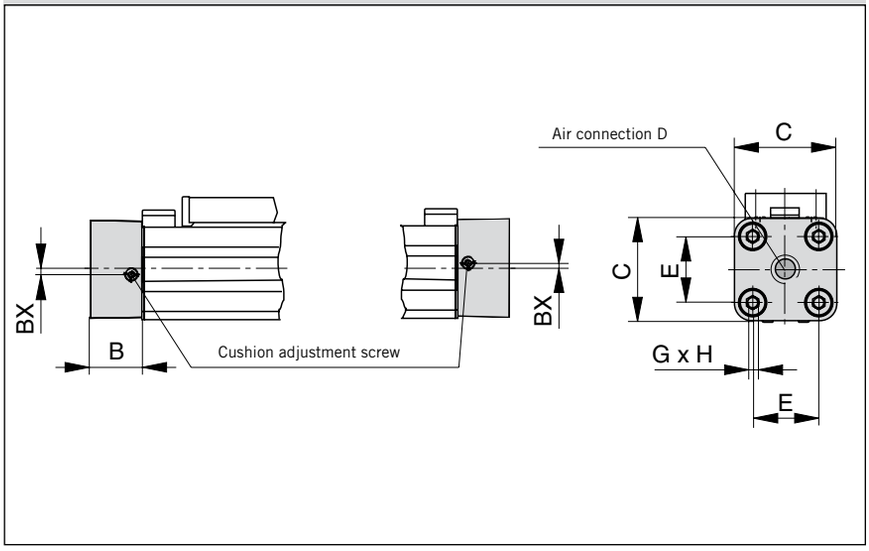

Series OSP-P40 to P80

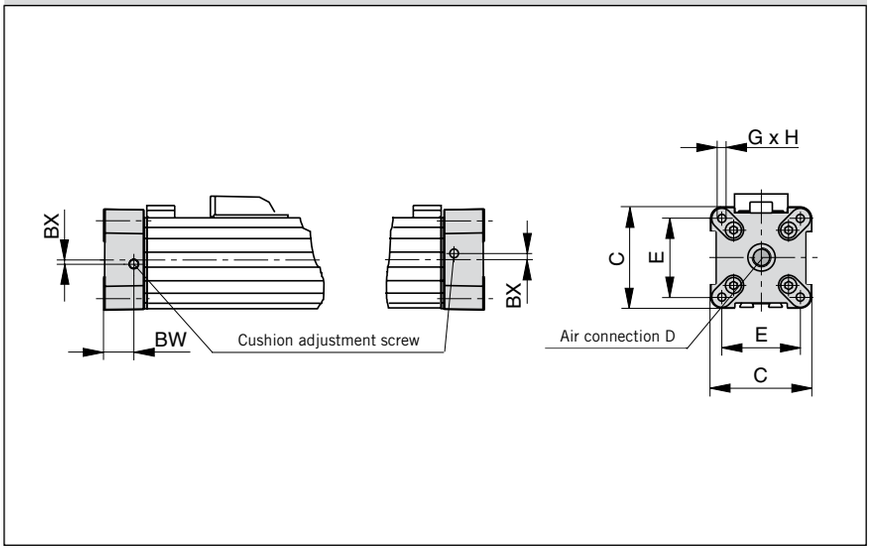

Dimension Table [mm]

Series	B	C	D	E	G	H	BX	BW
OSP-P16	14	30	M5	18	M3	9	1.8	10.8
OSP-P25	22	41	G1/8	27	M5	15	2.2	17.5
OSP-P32	25.5	52	G1/4	36	M6	15	2.5	20.5
OSP-P40	28	69	G1/4	54	M6	15	3	21
OSP-P50	33	87	G1/4	70	M6	15	–	27
OSP-P63	38	106	G3/8	78	M8	21	–	30
OSP-P80	47	132	G1/2	96	M10	25	–	37.5

Series OSP-P16

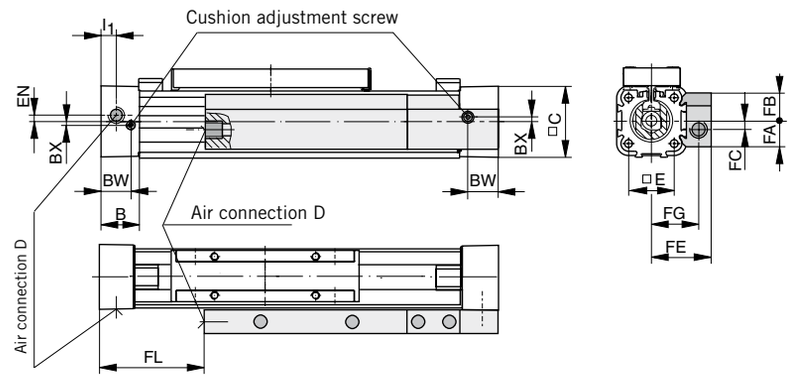

Series OSP-P25

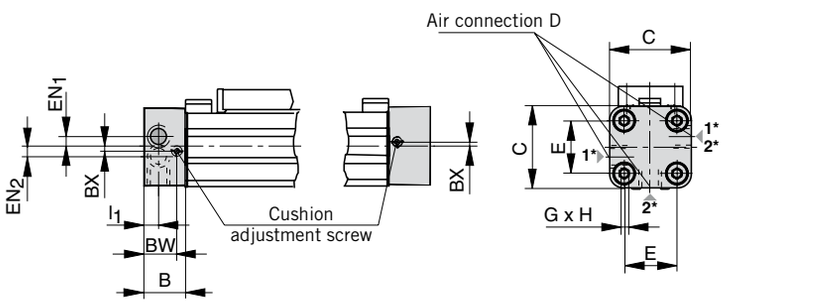

* Versions of air connection positions 1=>1 or 2=>2, the unused connection must be closed!

Series OSP-P32 to P80

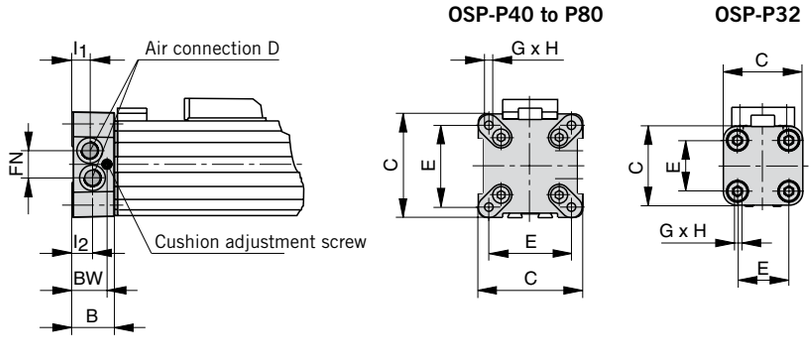

Both Air Connections at One End

A special end cap with both air connections on one side is available for situations where shortage of space, simplicity of installation or the nature of the process make it desirable.
Air supply to the other end is via internal air passages (OSP-P25 to P80) or via a hollow aluminium profile fitted externally (OSP-P16).
In this case the end caps cannot be rotated.

Please note:
When combining the OSP-P16 single end porting with inversion mountings, RS magnetic switches can only be mounted directly opposite to the external air-supply profile.

Dimension Table [mm]

Series	B	C	D	E	G	H	l_1	l_2	BX	BW	EN	EN_1	EN_2	FA	FB	FC	FE	FG	FL	FN
OSP-P16	14	30	M5	18	M3	9	5.5	–	1.8	10.8	3	–	–	12.6	12.6	4	27	21	36	–
OSP-P25	22	41	G1/8	27	M5	15	9	–	2.2	17.5	–	3.6	3.9	–	–	–	–	–	–	–
OSP-P32	25.5	52	G1/8	36	M6	15	12.2	10.5	–	20.5	–	–	–	–	–	–	–	–	–	15.2
OSP-P40	28	69	G1/8	54	M6	15	12	12	–	21	–	–	–	–	–	–	–	–	–	17
OSP-P50	33	87	G1/4	70	M6	15	14.5	14.5	–	27	–	–	–	–	–	–	–	–	–	22
OSP-P63	38	106	G3/8	78	M8	21	16.5	13.5	–	30	–	–	–	–	–	–	–	–	–	25
OSP-P80	47	132	G1/2	96	M10	25	22	17	–	37.5	–	–	–	–	–	–	–	–	–	34.5

The right to introduce technical modifications is reserved

Integrated 3/2 Way Valves VOE

For optimal control of the OSP-P cylinder, 3/2 way valves integrated into the cylinder's end caps can be used as a compact and complete solution. They allow for easy positioning of the cylinder, smooth operation at the lowest speeds and fast response, making them ideally suited for the direct control of production and automation processes.

Integrated 3/2 Way Valves VOE Series OSP-P25, P32, P40 and P50

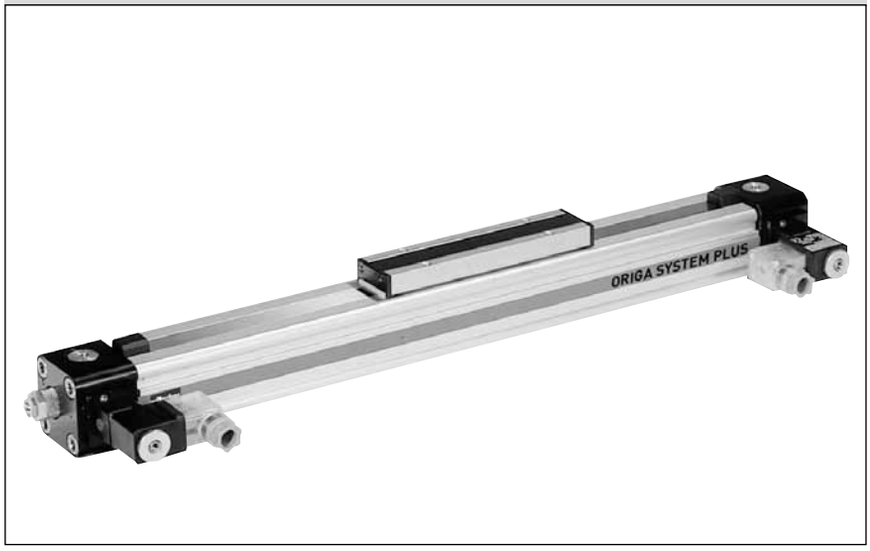

Characteristics:

- Complete compact solution
- Various connection possibilities: Free choice of air connection with rotating end caps with VOE valves, Air connection can be rotated 4 x 90°, Solenoid can be rotated 4 x 90°, Pilot valve can be rotated 180°
- High piston velocities can be achieved with max. 3 exhaust ports
- Minimal installation requirements
- Requires just one air connection per valve
- Optimal control of the OSP-P cylinder
- Excellent positioning characteristics
- Integrated operation indicator
- Integrated exhaust throttle valve
- Manual override - indexed
- Adjustable end cushioning
- Easily retrofitted – please note the increase in the overall length of the cylinder!

Characteristics 3/2 Way Valves VOE

Characteristics	3/2 Way Valves with spring return			
Pneumatic diagram	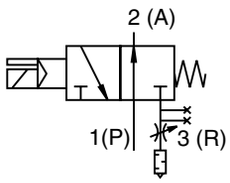		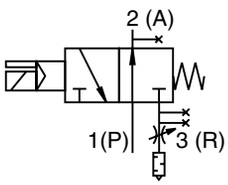	
Type	VOE-25	VOE-32	VOE-40	VOE-50
Actuation	electrical			
Basic position	P → A open, R closed			
Type	Poppet valve, non overlapping			
Mounting	integrated in end cap			
Installation	in any position			
Port size	G 1/8	G 1/4	G 3/8	G 3/8
Temperature	-10°C to +50°C *			
Operating pressure	2-8 bar			
Nominal voltage	24 V DC / 230 V AC, 50 Hz			
Power consumption	2,5 W / 6 VA			
Duty cycle	100%			
Electrical Protection	IP 65 DIN 40050			

* other temperature ranges on request

Dimensions VOE Valves OSP-P25 and P32

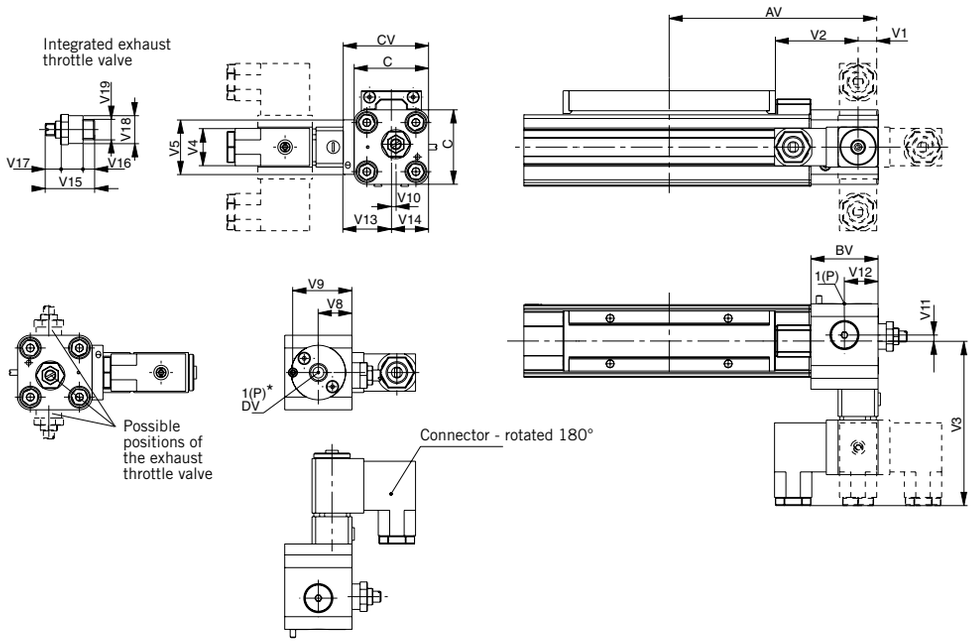

* End cap can be rotated 4x90°

Dimension Table [mm]

Series	AV	BV	C	CV	DV	V1	V2	V3	V4	V5	V8	V9	V10	V11	V12	V13	V14	V15	V16	V17	V18	V19
OSP-P25	115	37	41	47	G1/8	11	46	90.5	22	30	18.5	32.5	2.5	3.3	18.5	26.5	20.5	24	5	4	14	G1/8
OSP-P32	139	39.5	52	58	G1/4	20.5	46	96	22	32	20.5	34.7	6	5	20.5	32	26	32	7.5	6	18	G1/4

Dimensions VOE Valves OSP-P40 and P50

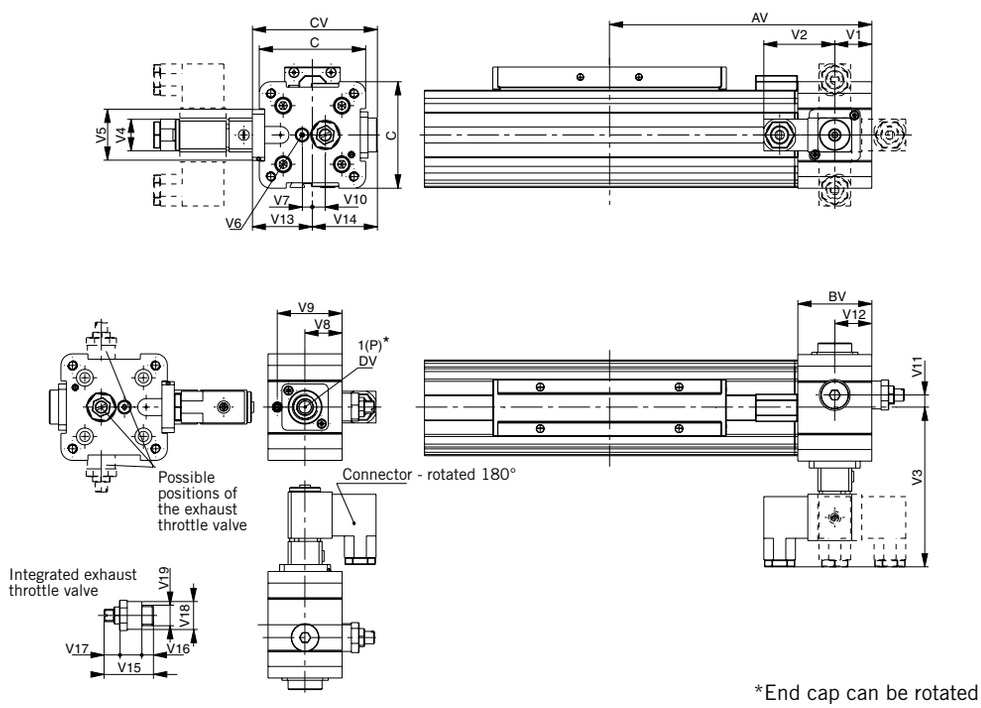

*End cap can be rotated 4x90°

Dimension Table [mm]

Series	AV	BV	C	CV	DV	V1	V2	V3	V4	V5	V6	V7	V8	V9	V10	V11	V12	V13	V14	V15	V16	V17	V18	V19
OSP-P40	170	48	69	81	G3/8	24	46	103	22	33	M5	6.7	24	42	8.3	8.3	24	39	42	32	7.5	6	18	G1/4
OSP-P50	190	48	87	82	G3/8	24	46	102	22	33	M5	4.5	24	42	12.2	12.2	24	38	44	32	7.5	6	18	G1/4

The right to introduce technical modifications is reserved

Order Instructions – Basic Cylinder

1-4	5+6	7	8	9	10	11	12-16	17	18	19	20	21	22	23	24	25
OSPP	25	0	0	0	0	0	01100	0	0	0	0	0	0	**0**	**0**	0

Piston-Ø
10
16
25
32
40
50
63
80

Stroke Length
In mm (5 digits)

Piston Mounting	
0	without
1	clevis mounting

add. Guide Carriage	
0	without

Measuring system	
0	without
X	SFI 0,1 mm
Y	SFI 1 mm

Screws	
0	standard
1	Stainless

Cushioning	
0	standard
1	max. length [3]

Version / Piston	
0	standard
1	Tandem

Lubrication	
0	standard
1	slow speed [2] [3]

End cap position	
0	l+r 0° = in front
1	l+r 90° = underneath
2	l+r 180° = at the back
3	l+r 270° = same side as outerband
4	l 90° = underneath; r 0° = in front
5	l 180° = at the back; r 0° = in front
6	l 270° = same side as outerband; r 0° = in front
7	l 0° = in front; r 90° = underneath
8	l 180° = at the back; r 90° = underneath
9	l 270° = same side as outerband; r 90° = underneath
A	l 0° = in front; r 180° = at the back
B	l 90° = underneath; r 180° = at the back
C	l 270° = same side as outerband; r 180° = at the back
D	l 0° = in front; r 270° = same side as outerband
E	l 90° = underneath; r 270° = same side as outerband
F	l 180° = at the back; r 270° = same side as outerband

Guides/ Brakes/ Inversion	
0	without
A	Activebrake AB Ø 25-80
M	Inversion Ø 16-80
N	Duplex Ø 25,32,40,50

Cover / Cable Channel	
0	standard
1	Cable channel
2	Cable channel two-sided
X	without cover rail

Air Connection	
0	standard
1	end face
2	both at one end (not turnable)
3	left stand. right end face
4	right stand. left end face
A	3/2 Way valve VOE 24 V = Ø 25,32,40,50
B	3/2 Way valve VOE 230 V~ / 110 V= Ø 25,32,40,50
C	3/2 Way valve VOE 48 V = Ø 25,32,40,50
E	3/2 Way valve VOE 110 V~ Ø 25,32,40,50

Seals	
0	standard (NBR)
1	Viton® [1]

End cap position (air connection)

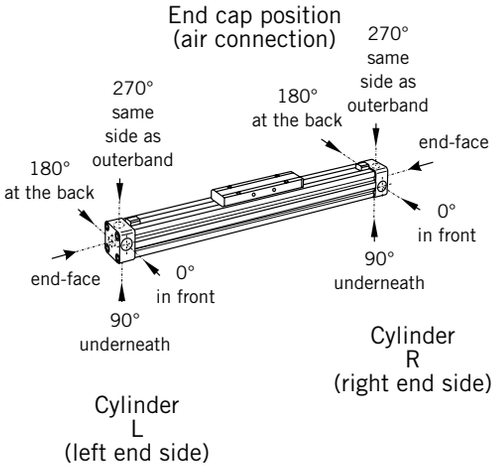

[1] Viton with VOE not available.

[2] Slow speed lubrication in combination with Viton® seals on demand

[3] „Lubrication slow speed“ in combination with „max. cushioning length“ not possible.

Accessories - please order separately

Description	Further information see
End Cap Mountings	**Page 105**
Mid-Section Support	**Page 106**
Adaptor Profile	**Page 118**
T-Slot Profile	**Page 119**
Adaptor Profile	**Page 120**
Multiplex Connection	**Page 122**
Magnetic Switches	**Page 123- 130**

Rodless Pneumatic Cylinder

Ø 50-80 mm

OSP
ORIGA SYSTEM PLUS

Long-Stroke Cylinder

for strokes up to 41 m

Series OSP-P..LS

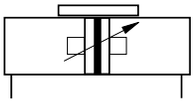

Standard Versions:
- Double-acting with adjustable end cushioning
- With magnetic piston for position sensing

Special Versions:
- Stainless steel screws
- Slow speed lubrication
- Viton® seals

Options:
- Displacement measuring system SFI-plus
- Active Brake AB..

Characteristics				Pressures quoted as gauge pressure
Characteristics		Symbol	Unit	Description
General Features				
Type				Rodless cylinder
Series				OSP-P
System				Double-acting, with cushioning, position sensing capability
Mounting				See drawings
Air Connection				Threaded
Ambient temperature range		T_{min} T_{max}	°C °C	+10 +40 — Other temperature ranges on request
Weight (mass)			kg	See table below
Installation				vertical, horizontal (piston at top or at bottom)
Medium				Filtered, unlubricated compressed air (other media on request)
Lubrication				Permanent grease lubrication (additional oil mist lubrication not required) Option: special slow speed grease
Material	Cylinder Profile			Anodized aluminium
	Carrier (piston)			Anodized aluminium
	End caps			Anodized aluminium
	Sealing bands			Corrosion resistant steel
	Seals			NBR (Option: Viton®)
	Screws			Galvanized steel Option: stainless steel
	Dust covers, wipers			Plastic
Max. operating pressure		p_{max}	bar	8
Max. speed		v	m/s	2

Weight (mass) [kg]

Series (Basic cylinder)	Weight (mass) [kg] At 0 mm stroke	per 100 mm stroke
OSP-P50LS	3,53	0,566
OSP-P63LS	6,41	0,925
OSP-P80LS	12,46	1,262

Size Comparison

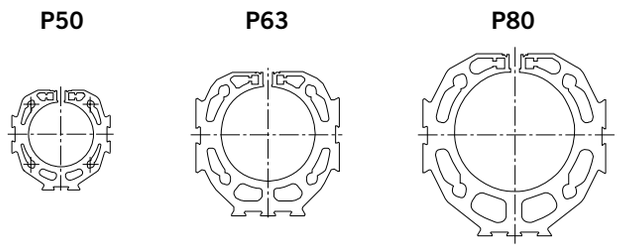

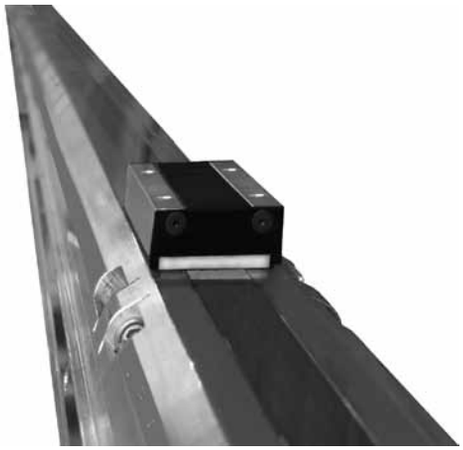

For **magnetic switches** see from page 123
Accessories see from page 101

The right to introduce technical modifications is reserved

Loads, Forces and Moments

Choice of cylinder is decided by:

- permissible loads, forces and moments
- performance of the pneumatic end cushions. The main factors here are the mass to be cushioned and the piston speed at start of cushioning (unless external cushioning is used, e. g. hydraulic shock absorbers).

The adjacent table shows the maximum values for light, shock-free operation, which must not be exceeded even in dynamic operation. **Load and moment data are based on speeds v ≤ 0.5 m/s.**

When working out the action force required, it is essential to take into account the friction forces generated by the specific application or load.

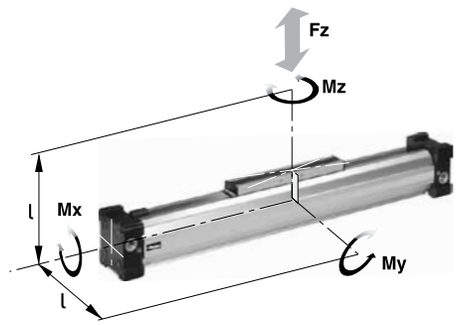

M = F · l
Bending moments are calculated from the centre of the linear actuator

Series [mm Ø]	Theoretical Action Force at 6 bar [N]	effektive Action Force F_A at 6 bar [N]	max. Moments Mx [Nm]	My [Nm]	Mz [Nm]	max. Load F [N]	Cushion Length [mm]
OSP-P50LS	1178	1000	10	115	15	1200	30
OSP-P63LS	1870	1550	12	200	24	1650	32
OSP-P80LS	3016	2600	24	360	48	2400	39

Cushioning Diagram

Work out your expected moving mass and read off the maximum permissible speed at start of cushioning. Alternatively, take your desired speed and expected mass and find the cylinder size required.
Please note that piston speed at start of cushioning is typically ca. 50 % higher than the average speed, and that it is this higher speed which determines the choice of cylinder. If these maximum permissible values are exceeded, additional shock absorbers must be used.

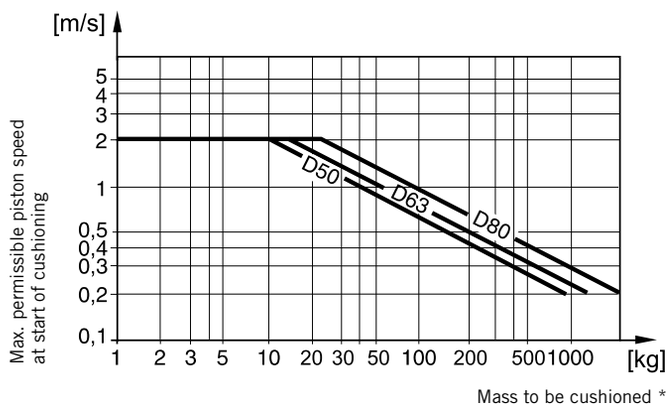

Horizontal application, pressure p = 6 bar

* For cylinders with brakes, please be sure to take the mass of the brake housing into account.

If the permitted limit values are exceeded, additional shock absorbers should be fitted in the area of the centre of gravity .

Dimensions of Basic Cylinder OSP - P50 LS to P80LS

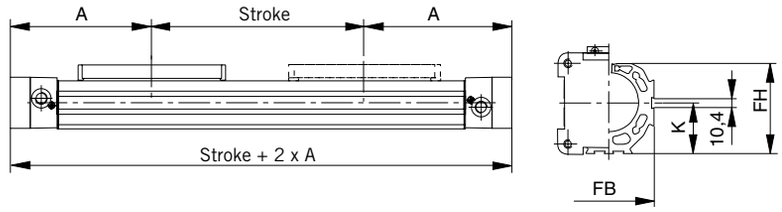

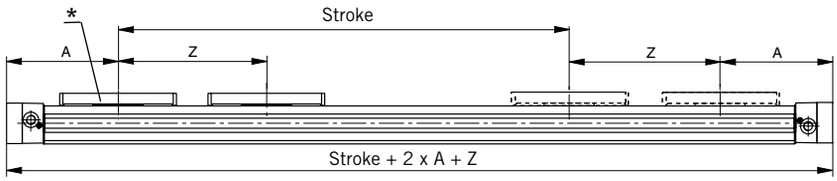

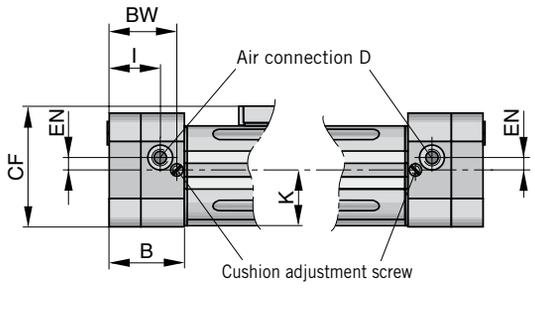

Note: End caps are not turnable.

Cylinder
Stroke and Dead Length A

- Free choice of stroke length up to 41.000 mm in 1 mm steps

Tandem Cylinder

Two pistons are fitted: dimension "Z" is optional. (Please note minimum distance "Zmin").

- Free choice of stroke length up to 41.000 mm in 1 mm steps
- **Stroke length to order is stroke + dimension "Z"**

Please note:

To avoid multiple actuation of magnetic switches, the second piston is not equipped with magnets.

* Piston with magnet

Carrier
Series OSP-P50LS to P80LS

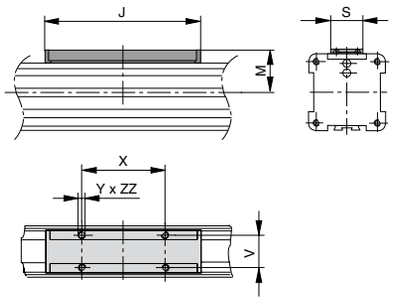

Dimension Table [mm]

Series	A	B	C	D	E	G	H	I	J	K	M	S	V	X	Y	Z_{min}	BW	CF	EN	FB	FH	ZZ
OSP-P50LS	200	58	87	G1/4	70	M6	15	39.5	200	43	49	36	27	110	M6	251	52	92.5	10	76	77	10
OSP-P63LS	250	73	106	G3/8	78	M8	21	49.5	256	54	63	50	34	140	M8	313	65	117	12	96	96	16
OSP-P80LS	295	82	132	G1/2	96	M10	25	57	348	67	80	52	36	190	M10	384	72.5	147	16.5	122	122	20

The right to introduce technical modifications is reserved

Linear Drive Accessories

Ø 50-80 mm
Mid-Section Support
E1, E1L

OSP
ORIGA SYSTEM PLUS

For linear drive
• Series OSP-P..LS

Note on Types E1 and E1L (P50LS – P80LS):
The mid-section support can also be mounted on the underside of the actuator, in which case its distance from the centre of the actuator is different.
For mounting the Long-Stroke cylinder, a mid-section support Type E1 (fixed support) is required. Depending on the stroke length and the load, additional E1L supports (movable supports) may be required.

For permissible support spacings see diagram.

Stainless steel version on request.

Permissible Support Spacings: OSP - P50LS to P80LS

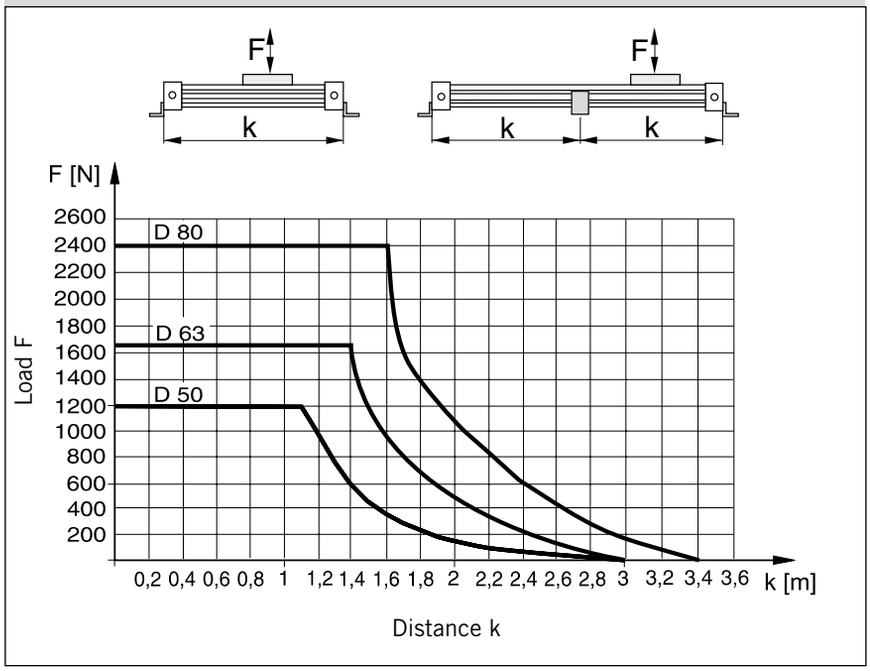

Series OSP-P50LS to P80LS: Type E1, E1L
(Mounting from above / below using a cap screw)

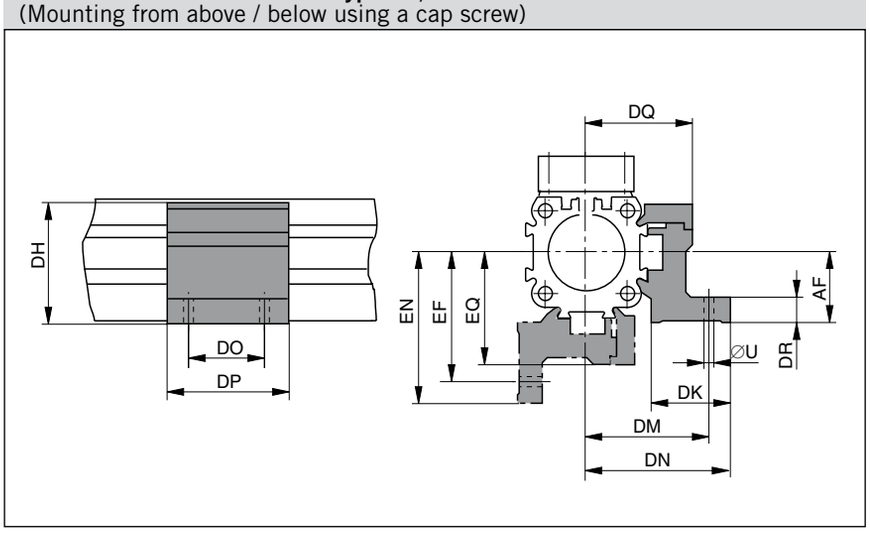

Dimension Table [mm] Series OSP-P50LS to P80LS

Series	R	U	AF	DF	DH	DK	DM	DN	DO	DP
OSP-P50LS	M6	7	48	40	71	34	59	67	45	60
OSP-P63LS	M8	9	57	47.5	91	44	73	83	45	65
OSP-P80LS	M10	11	72	60	111.5	63	97	112	55	80

Series	DQ	DR	DT	EF	EM	EN	EQ	Order No. Type E1 fixed support	Order No. Type E1L movable support
OSP-P50LS	52	10	11	64	45	72	57	**20163FIL**	**21352FIL**
OSP-P63LS	63	12	16	79	53.5	89	69	**20452FIL**	**21353FIL**
OSP-P80LS	81	15	25	103	66	118	87	**20482FIL**	**21354FIL**

Order Instructions – Long-Stroke Cylinder

Note:

Assembly and commissioning of the Long-Stroke cylinder is carried out on site by ORIGA technical personnel.

For more information on ordering and installation please contact your sales or customer service partner.

Accessories - please order separately

Description	Further information see
Clevis Mounting	Page 104
End Cap Mountings	Page 105
Mid-Section Support	Page 28
Inversion Mounting	Page 117
Adaptor Profile	Page 118
T-Slot Profile	Page 119
Connection Profile	Page 120
Magnetic Switches	Page 123-133
Cable Cover	Page 126

The right to introduce technical modifications is reserved

Clean Room Cylinder

ø 16 – 32 mm

Rodless Cylinder

certified to DIN EN ISO 14644-1

OSP
ORIGA SYSTEM PLUS

Characteristics			Pressure quoted as gauge pressure
Characteristics	Symbol	Unit	Description
General Features			
Type			Rodless Cylinder
Series			OSP-P
System			Double-acting, with cushioning, position sensing capability
Mounting			see drawings
Air connection			Threaded
Ambient and medium temperature range	T_{min} T_{max}	°C °C	-10 – other temperature ranges +80 on request
Weight (mass)		kg	See table below
Installation			In any positon
Medium			Filtered, unlubricated compressed air (other media on request)
Lubrication			Permanent grease lubrication (additional oil mist lubrication not required) Option: special slow speed grease
Material – Cylinder profile			Anodized aluminium
Material – Carrier (piston)			Anodized aluminium
Material – End caps			Aluminium, lacquered
Material – Sealing bands			Corrosion resistant steel
Material – Seals			NBR (Option: Viton®)
Material – Screws			Stainless steel
Material – Covers			Anodized aluminium
Material – Guide plate			Plastic
Max. operating pressure*	p_{max}	bar	8

* Pressure quoted as gauge pressure

Weight (mass) [kg]

Series (basic cylinder)	Weight (mass) [kg]	
	at 0 mm stroke	per 100 mm stroke
OSP-P16	0.22	0.1
OSP-P25	0.65	0.197
OSP-P32	1.44	0.354

Size Comparison

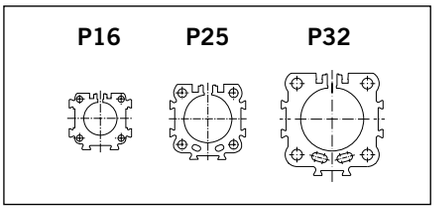

Standard Versions:
- Double-acting with adjustable end cushioning
- With magnetic piston for position sensing
- Stainless steel screws

Special Versions:
- Slow speed lubrication
- Viton® seals

Series OSP-P..

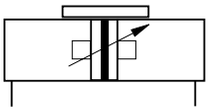

Features:
- Clean room classification
  ISO Class 4 at v_m = 0.14 m/s
  ISO Class 5 at v_m = 0.5 m/s
- suitable for smooth slow speed operation up to v_{min} = 0.005 m/s
- optional stroke length up to 1200 mm
  (longer strokes on request)
- Low maintenance
- Compact design with equal force and velocity in both directions
- Aluminium piston with bearing rings to support high direct and cantilever loads

For **magnetic switches** see from page 123
For **mountings** and **accessories** see from page 101-122

The right to introduce technical modifications is reserved

Certification

Based on the Parker Origa rodless cylinder, proven in world wide markets, Parker Origa now offers the only rodless cylinder on the market with a certification from IPA Institute for the cleanroom specification according to DIN EN ISO 14644-1.

Function:

The clean room cylinders of the ORIGA SYSTEM PLUS (OSP-P) combines the efficiency of the Parker Origa slot seal system with vacuum protection against progressive wear and contamination from the sliding components. A partial vacuum drawn between inner and outer sealing bands prevents emission into the clean room. To achieve the necessary vacuum a suction flow of ca. 4 m^3/h is required.

Function Diagram

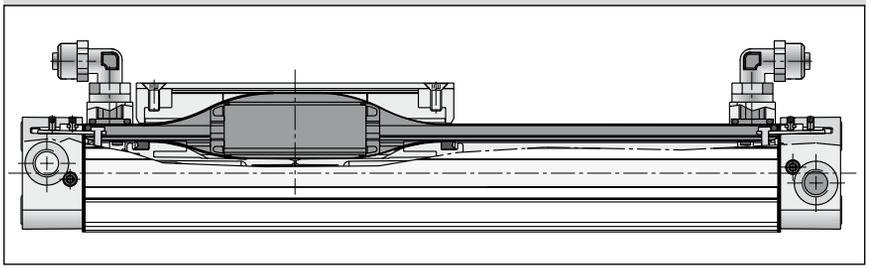

Loads, Forces and Moments

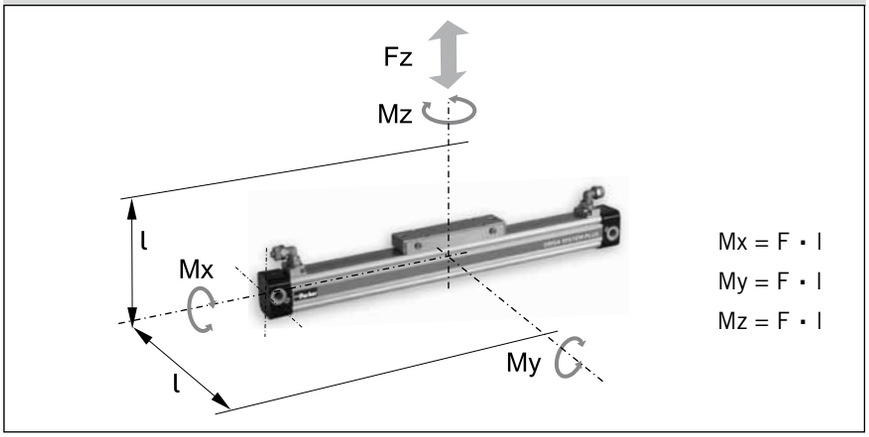

Series	Effective Force at 6 bar [N]	Max. Moment			Max. Load	Cushion Length [mm]
		Mx [Nm]	My [Nm]	Mz [Nm]	Fz [N]	
OSP-P16	78	0.45	4	0.5	120	11
OSP-P25	250	1.5	15	3.0	300	17
OSP-P32	420	3.0	30	5.0	450	20

Load and moment data are based on speeds v ≤ 0.2 m/s.
The adjacent table shows the maximum values for light, shock-free operation which must not be exceeded even in dynamic operation.

Dimensions [mm]

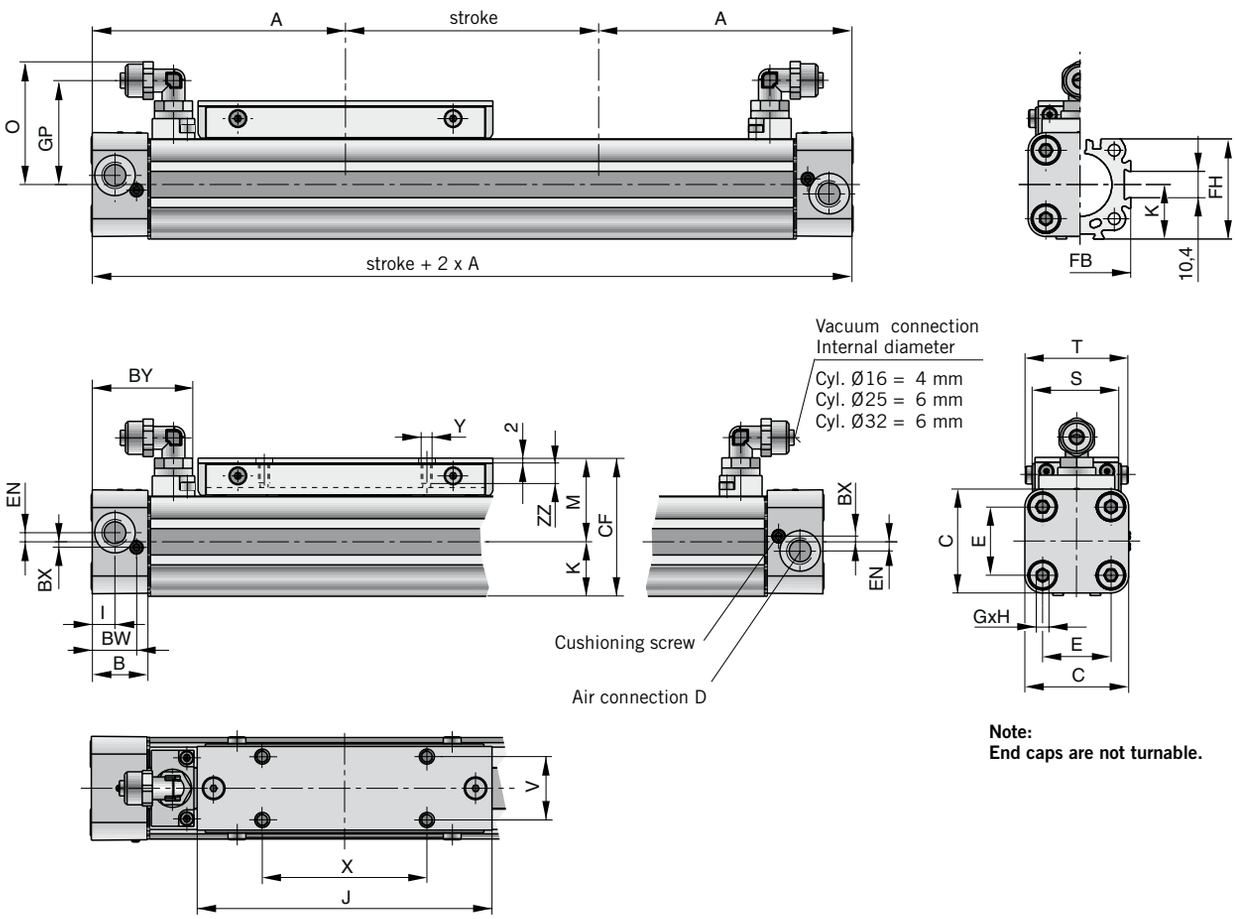

Note:
End caps are not turnable.

Dimension Table [mm]

Series	A	B	C	D	E	G	H	I	J	K	M	O	S
OSP-P16	65	14	30	M5	18	M3	9	5.5	69	15	25	31	24
OSP-P25	100	22	41	G1/8	27	M5	15	9	117	21.5	33	48.5	35
OSP-P32	125	25.5	52	G1/4	36	M6	15	11.5	152	28.5	40	53.6	38

Series	T	V	X	Y	BW	BX	BY	CF	EN	FB	FH	GP	ZZ
OSP-P16	29.6	16.5	36	M4	10.8	1.8	28.5	40	3	30	27.2	25.7	7
OSP-P25	40.6	25	65	M5	17.5	2.2	40.5	54.5	3.6	40	39.5	41	8
OSP-P32	45	27	90	M6	20.5	2.5	47.1	68.5	5.5	52	51.7	46.2	10

The right to introduce technical modifications is reserved

Order Instructions – Clean Room Cylinders

1-4	5+6	7	8	9	10	11	12-16	17	18	19	20	21	22	23	24	25
OSPP	25	4	7	0	0	1	01100	0	0	0	0	0	0	**0**	**0**	0

Piston-Ø

16
25
32

Version / Piston

4	Clean room

Air Connection

7	End cap Clean room

Seals

0	Standard (NBR)
1	Viton®

Lubrication

0	Standard
1	Slow speed [1]

Screws

1	Stainless

Stroke Length

in mm (5 digits) [2]

End cap position

0	L+R 0° = in front

Cushioning

0	Standard

Guides/ Brakes/ Inversion

0	without

Piston Mounting

0	without

Cover / Cable Channel

0	Standard
1	Cable channel
2	Cable channel two-sided
X	without Cover rail

add. Guide Carriage

0	without

Measuring system

0	without

[1] The combination „Slow speed lubrication“ and „Viton® sealings“ are available on request.
[2] max. stroke lengths 1200 mm, longer strokes on request.

Accessories – please order separately

Description	Further information see
End Cap Mountings	**Page 105**
Mid-Section Support	**Page 106**
Adaptor Profile	**Page 118**
T-Slot Profile	**Page 119**
Connection Profile	**Page 120**
Magnetic Switches	**Page 123-130**

Components for EX-Areas

Informations for ATEX-Directives

The rodless pneumatic cylinders of Parker Origa are the first linear drive unit, for that Ex range in the group of equipment II, Category 2 GD are certified.

Detail informations for use pneumatic components in Ex-Areas see leaflet A5P060E "EU Directive 94/9/EG (ATEX 95) for Pneumatic Components".

Technical Data (deviant to the Standard Cylinder)

Pressure quoted as gauge pressure

Characteristics	Symbol	Unit	Description
Ambient temperature range	T_{min} T_{max}	°C °C	-10 +60
Max. switching frequency		Hz	1 (double stroke/s) Basic cylinder 0.5 (1stroke/s) Cylinder with guide
Operating pressure range	p_{max}	bar	Max. 8
Max. speed	v_{max}	m/s	3 (Basic cylinder) 2 (Cylinder with guide SLIDELINE and cylinder with guide BASIC GUIDE)
Medium			Filtered, unlibricated compressed air – free from water and dirt to ISO 8573-1 Solids: Class 7 particle size < 40 µm for Gas Water content: pressure dew point +3 °C, class 4, but at least 5 °C below minimum operating temperature
Noise level		dB (A)	70
Information for materials			Aluminium: see data sheet "Material" Lubrication: see security data sheet "Grease for use in Cylinder with guides" Sealing bands: Corrosion resistant steel

For all other details for dimensions, weights, allowable loads, cushioning diagrams and accessories see data sheets in this catalogue.

Equipment Group II Categorie 2GD			
Rodless cylinder: Ex II 2GD c T4 T135°C -10°C≤Ta≤+60°C			
Series	Size	Stroke range	Accessories
OSP-P	Ø 10 to 80	1 – 6000 mm	Mountings programme
BASIC GUIDE	Ø 25 to 40	1 – 6000 mm	Mountings programme
SLIDELINE	Ø 16 to 80	1 – 5500 mm	Mountings programme

For **basic cylinder** see page 15-24
For **BASIC GUIDE** see page 39-45
For **plain bearing guide SLIDELINE** see page 49-50
For **mountings and accessories** see page 101-120

OSP ORIGA SYSTEM PLUS

Rodless Cylinder ø 10 – 80 mm

Basic Cylinder

Series: OSP-P ..ATEX

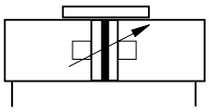

BASIC GUIDE ø 25 – 40 mm

Series: BG -..ATEX

Plain Bearing Guide SLIDELINE ø 16 – 80 mm

Series: SL -..ATEX

The right to introduce technical modifications is reserved

Order Instructions – ATEX-CYLINDER *

1-4	5+6	7	8	9	10	11	12-16	17	18	19	20	21	22	23	24	25
OSPP	25	0	0	0	0	0	01100	0	0	0	0	0	0	**0**	**0**	0

Piston-Ø
10
16
25
32
40
50
63
80

Stroke
Input in mm (5 digits)

Piston Mounting	
0	without
1	clevis mounting Ø 16-80

add. Guide Carriage	
0	without
2	Guide Carriage Slideline SL Ø 16-80

Measuring system	
0	without

Screws	
0	standard
1	Stainless

Cushioning	
0	standard
1	max. length [2]

Version / Piston	
* **6**	ATEX standard

Lubrication	
0	standard
1	Slow speed [1] [2]

End cap position	
0	l+r 0° = in front
1	l+r 90° = underneath
2	l+r 180° = at the back
3	l+r 270° = same side as outerband
4	l 90° = underneath; r 0° = in front
5	l 180° = at the back; r 0° = in front
6	l 270° = same side as outerband; r 0° = in front
7	l 0° = in front; r 90° = underneath
8	l 180° = at the back; r 90° = underneath
9	l 270° = same side as outerband; r 90° = underneath
A	l 0° = in front; r 180° = at the back
B	l 90° = underneath; r 180° = at the back
C	l 270° = same side as outerband; r 180° = at the back
D	l 0° = in front; r 270° = same side as outerband
E	l 90° = underneath; r 270° = same side as outerband
F	l 180° = at the back; r 270° = same side as outerband

Guides/ Brakes/ Inversion	
0	without
2	Slideline SL Ø 16-80
M	Inversion

Cover / Cable Channel	
0	standard
1	Cable channel
2	Cable channel two-sided
X	without cover rail

Air Connection	
0	Standard
1	end face
2	both at one end (not turnable)
3	left stand. right end face
4	right stand. left end face

Seals	
0	standard (NBR)
1	Viton® [1]

End cap position (air connection)

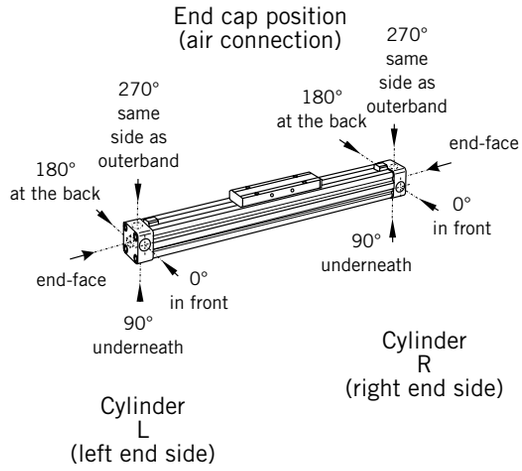

* Order instructions BASIC GUIDE ATEX-Version see page 45

[1] Slow speed lubrication in combination with Viton® seals on demand.

[2] „Lubrication slow speed“ in combination with „max. cushioning length“ not possible.

Accessories – please order separately

Description	Further information see
End Cap Mounting for OSP-P Basic Cylinder	**Page 105**
End Cap Mounting for OSP-P Basic Cylinder with SLIDELINE	**Page 108**
Mid-Section Support for OSP-P Basic Cylinder	**Page 106**
Mid-Section Support for OSP-P Basic Cylinder with SLIDELINE	**Page 109**
Adaptor Profile	**Page 118**
T-Slot Profile	**Page 119**
Adaptor Profile	**Page 120**
Magnetic Switches ATEX-Version	**Page 131-133**

Rodless Cylinder Ø 40 mm

for synchronized bi-parting movements

Type OSP-P40-SL-BP

OSP
ORIGA SYSTEM PLUS

Features:

- Accurate bi-parting movement through toothed belt synchronization
- Optimum slow speed performance
- Increased action force
- Anodized aluminium guide rail with prism-form slideway arrangement
- Adjustable polymer slide units
- Combined sealing system with polymer and felt elements to remove dirt and lubricate the slideway
- Integrated grease nipples for guide lubrication

Applications:

- Opening and closing operations
- Gripping of workpieces – outside
- Gripping of hollow workpieces – inside
- Gripping underneath larger objects
- Clamping force adjustable via pressure regulator

Characteristics

Characteristics	Symbol	Unit	Description
General Features			
Type			Rodless cylinder for synchronized bi-parting movements
Series			OSP-P
System			Double acting with end cushioning For contactless position sensing
Guide			Slideline SL40
Synchronization			Toothed belt
Mounting			See drawings
Ambient temperature range	T_{min} T_{max}	°C °C	-10 +60
Weight (mass)		kg	see page 38
Medium			Filtered, unlubricated compressed air (other media on request)
Lubrication			Special slow speed grease – additional oil mist lubrication not required
Material			
Toothed Belt			Steel-corded polyurethane
Belt wheel			Aluminium
Operating pressure range	p_{max}	bar	6
Cushioning middle position			Elastic buffer
Max. Speed	v_{max}	m/s	0.2
Max. stroke of each stroke		mm	500
Max. mass per guide carrier		kg	25
Max. moments on guide carrier			
lateral moment	Mx_{max}	Nm	25
axial moment	My_{max}	Nm	46
rotating moment	Mz_{max}	Nm	46
For more technical information see page 15-17,19 and 49-50			

Applications

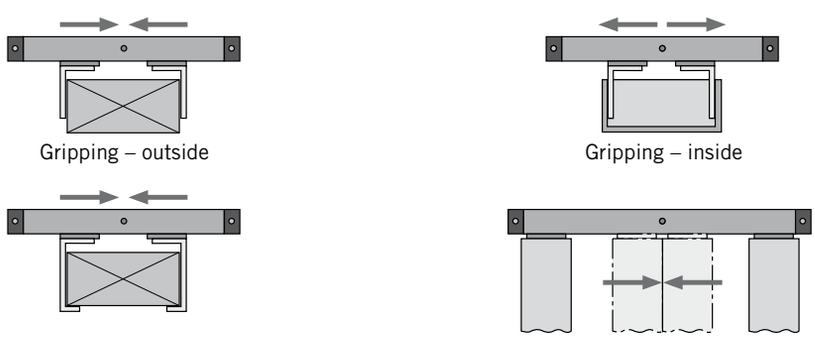

For **Magnetic Switches** see page 123-130

The right to introduce technical modifications is reserved

Weight (mass) [kg]		
Cylinder series (Basic cylinder)	Weight (mass) [kg]	
	At 0 mm stroke	per 100 mm stroke
OSP-P40-SL-BP	10.33	2.13

Function:

The OSP-P40-SL-BP bidirectional linear drive is based on the OSP-P40 rodless pneumatic cylinder and adapted SLIDELINE SL40 polymer plain-bearing guides.

Two pistons in the cylinder bore are connected via yokes and carriers to the SLIDELINE guide carriers, which handle the forces and moments generated.

The bi-parting movements of the guide carriers are accurately synchronized by a recirculating toothed belt.

The two pistons are driven from the middle to the end positions via a common G1/4 air connection in the middle of the cylinder, and are driven from the end positions to the middle via an air connection in each end cap.

End position cushioning is provided by adjustable air cushioning in the end caps, and middle position cushioning by rubber buffers.

Dimensions [mm]

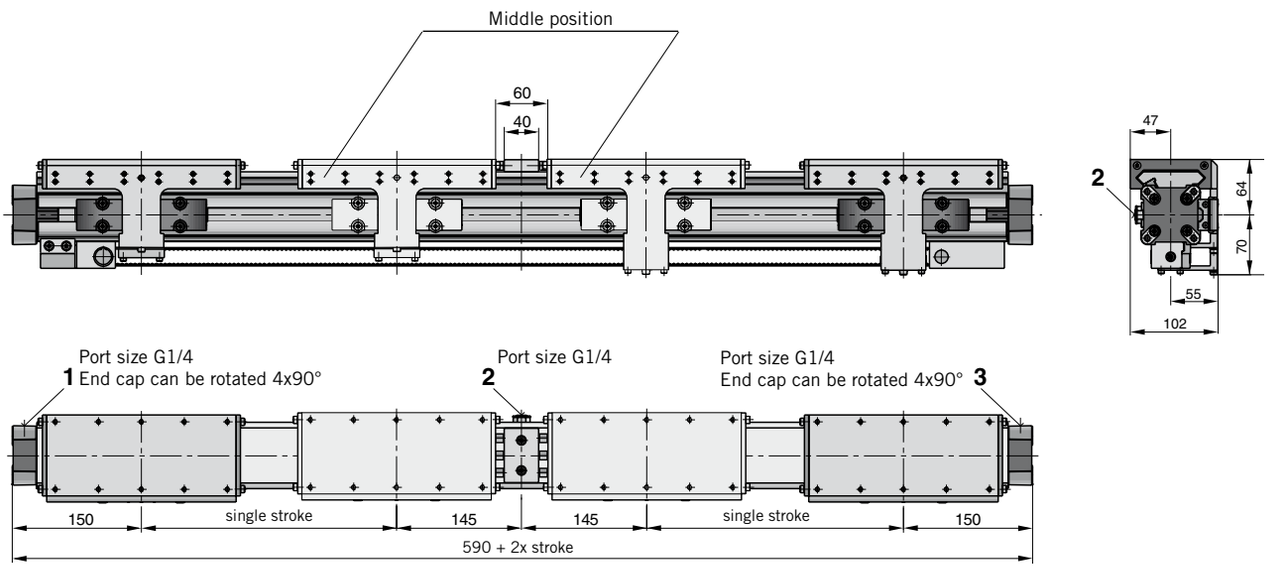

Air connections:

To drive the guide carriers to the middle position: pressurize ports 1 and 3.

To drive the guide carriers to the end positions: pressurize port 2.

For more dimensions see **page 15-17, 19 and 49-50**

Order Instructions

Description	Type	Order No. **
Rodless cylinder for synchronized bi-parting movements	**OSP-P40-SL-BP**	**21315**

Note: Order stroke = 2 x single stroke

** Please use this order pattern: Order-No. + „order stroke in mm“ (5 digits)
Example: for single stroke 100 mm = order stroke 2x100 mm = 200 mm: 21315-00200

Plain Bearing BASIC GUIDE

ø 25 - 40 mm

OSP
ORIGA SYSTEM PLUS

Series OSPP- BG

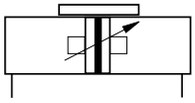

Standard Versions:
- Double-acting with adjustable end cushioning
- With magnetic piston for position sensing

Special Versions:
- Stainless steel screws
- Slow speed lubrication
- Viton® seals
- Both air connections on one end
- Air connection on the end-face
- Integrated Valves VOE

Characteristics — **Pressures quoted as gauge pressure**

Characteristics		Symbol	Unit	Description
General Features				
Type				Rodless cylinder
Series				OSPP-BG
System				Double-acting, with cushioning, position sensing capability
Mounting				See drawings
Air Connection				Threaded
Ambient temperature range		T_{min} T_{max}	°C °C	-10 +80 - Other temperature ranges on request
Weight (mass)			kg	See table below
Installation				free
Medium				Filtered, unlubricated compressed air (other media on request)
Lubrication				Permanent grease lubrication (additional oil mist lubrication not required) Option: special slow speed grease
Material	Cylinder Profile			Anodized aluminium
	Carrier, (piston)			Anodized aluminium
	End caps			Al, catalytically coated
	Sealing bands			Corrosion resistant steel
	Seals			NBR (Option: Viton®)
	Screws			Galvanized steel Option: stainless steel
	Dust covers, wipers			Plastic
Max. operating pressure		p_{max}	bar	8

Weight (mass) [kg]

Cylinder series (basic cylinder)	Weight (mass) [kg]	
	at 0 mm stroke	per 100 mm stroke
OSPP-BG25	1.09	0.22
OSPP-BG32	2.26	0.38
OSPP-BG40	3.52	0.41

Size Comparison

BG25

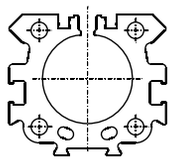

BG32

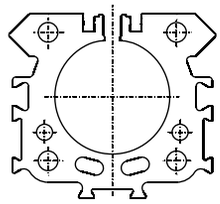

BG40

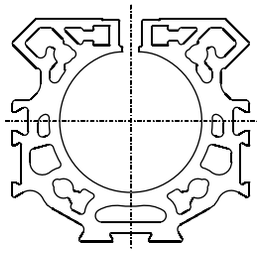

- End cap can be rotated 4 x 90° to position air connection as desired
- Free choice of stroke length up to 6000 mm

For **Magnetic Switches** see page 127-130

The right to introduce technical modifications is reserved

Plain Bearing BASIC GUIDE

OSP
ORIGA SYSTEM PLUS

Size BG 25 to 40
Compact, robust plain bearing guide for medium loads
• Series OSP-P

Features:

- Compact: guide rail integrated in cylinder profile tube
- Robust: wiper system and grease nipples for long service life
- smooth operation
- simple to (re-) adjust
- Integrated grease nipples
- Any length of stroke up to 6000 mm (longer strokes on request)

Options:

- Corrosion resistant version available on request
- VOE-Valves
- ATEX-version Ⓔx (see page 35-36)

Accessories:

- Mid-Section Support
- End Cap Mountings
- Magnetic Switches

Versions

Pneumatic linear drive
Series OSPP-BG

Composite sealing system with high-tech polymer and felt wiper elements to remove dirt and lubricate the slideways.

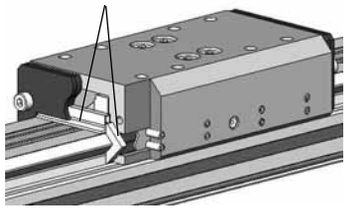

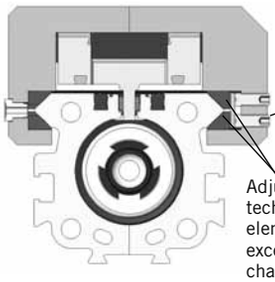

Loads, Forces and Moments

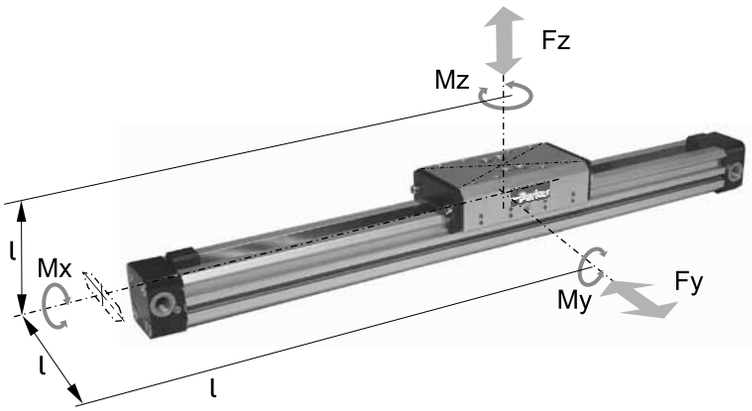

Technical Data

The table shows the maximum permissible values for smooth operation, which should not be exceeded even under dynamic conditions.

The load and moment gures apply to speeds v < 0.2 m/s.

*** Please note:**
In the cushioning diagram, add the mass of the guide carriage to the mass to be cushioned.

$$\frac{Mx}{Mx_{max}} + \frac{My}{My_{max}} + \frac{Mz}{Mz_{max}} + \frac{Fy}{Fy_{max}} + \frac{Fz}{Fz_{max}} \leq 1$$

The sum of the loads should not exceed 1.

Series	Max. Moments [Nm]			Max. Load [Nm]	Mass of Basic Guide [kg]		Mass * of guide carriage [kg]	Cushion Length [mm]
	Mx	My	Mz	Fy, Fz	at 0 mm stroke	per 100 mm stroke		
BG25	10	28	28	590	1.09	0.22	0.29	17
BG32	17	43	43	850	2.26	0.38	0.69	20
BG40	39	110	110	1600	3.52	0.41	1.37	27

Mountings see page 44

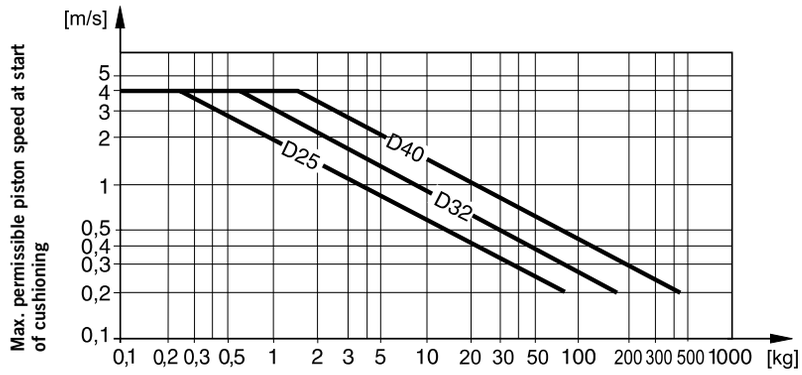

Horizontal application, pressure p = 6 bar

* The mass of carrier has to be taken in account.

If the permitted limit values are exceeded, additional shock absorbers should be fitted in the area of the centre of gravity.

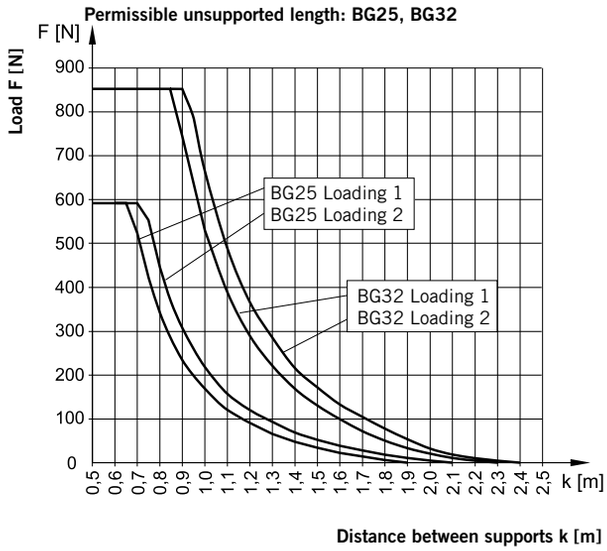

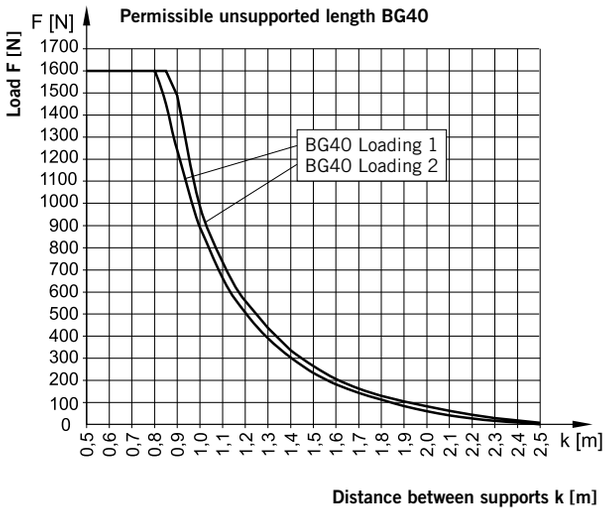

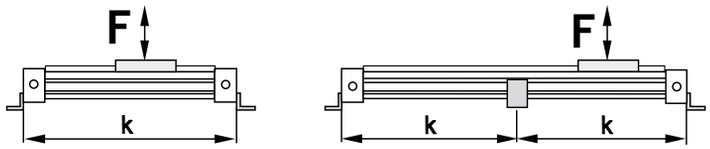

Cushioning Diagram

Work out your expected moving mass and read off the maximum permissible speed at start of cushioning. Alternatively, take your desired speed and expected mass and find the cylinder size required.
Please note that piston speed at start of cushioning is typically approx.
50 % higher than the average speed, and that it is this higher speed which determines the choice of cylinder.

Mid-Section Support

(Versions see page 44)

Mid-section supports are required from a certain stroke length to prevent excessive deflection and vibration of the linear drive.
The diagrams show the maximum permissible unsupported length in relation to loading. A distinction must be drawn between
loading 1 and loading 2.
Deflection of 0.5 mm max. between supports is permissible.

Note:
For speeds v > 0.5 m/s the distance between supports should not exceed 1 m.

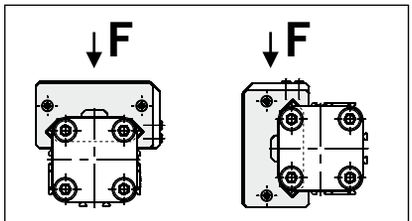

Loading 1 Loading 2

The right to introduce technical modifications is reserved

Cylinder
Stroke and Dead Length A

- Free choice of stroke length up to 6000 mm in 1 mm steps.
- Longer strokes on request.

Dimensions

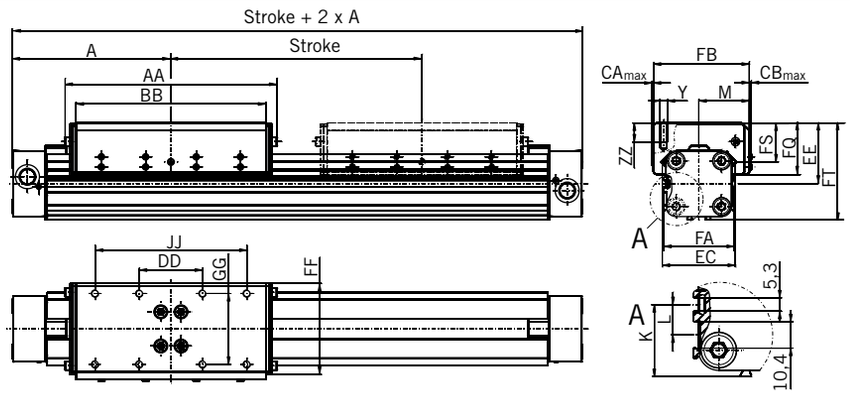

Other mountings and options see accessories.

Fig. A shows BG32 and BG40

Tandem Cylinder

Two pistons are fitted: dimension "Z" is optional.
(Please note minimum distance Z_{min}).

- Available sizes Ø 25, 32, 40
- Free choice of stroke length up to 6000 mm in 1 mm steps
- Longer strokes on request
- **Stroke length to order is stroke + dimension "Z"**

Please note:

To avoid multiple actuation of magnetic switches, the second piston is not equipped with magnets.

Tandem Cylinder

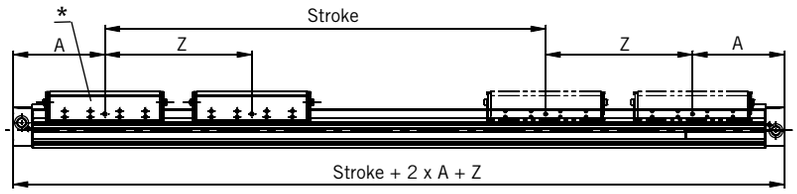

Standard air connection

End cap can be rotated 4 x 90°.
The air connection and cushion screw can therefore be positioned as desired.

* piston with magnet

End Cap/Air Connection can be rotated 4 x 90°

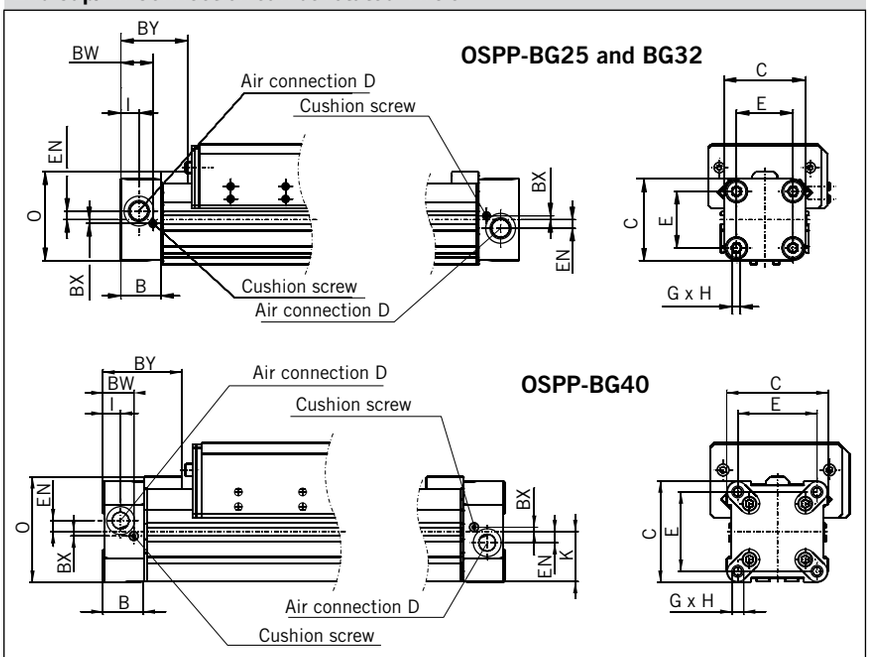

Dimension Table [mm]

Series	A	B	C	D	E	G	H	I	K	L	M	O	Y	Z_{min}	AA	BB	BW
BG25	100	22	41	G1/8	27	M5	15	9	17.5	-	32	47	M6	128	126	108	17.5
BG32	125	25.5	52	G1/4	36	M6	15	11.5	28.5	12	40	59	M6	170	168	150	20.5
BG40	150	28	69	G1/4	54	M6	15	12	34.5	12	47	72	M6	212	198	178	21

Series	BX	BY	CA_{max}	CB_{max}	DD	EC	EE	EN	FA	FB	FF	FQ	FS	FT	GG	JJ	ZZ
BG25	2.2	40	1.5	1.5	40	44	38	3.6	44	60	56	32	24	59.5	43	80	12
BG32	2.5	44	0	2	50	58	48	5.5	56	76	72	40.8	30.8	76.5	56	120	12
BG40	3	54	0	1	70	67	58	7.5	67	89	84	48	36	92.5	60	140	12

End cap - Air connection both at one end
Series OSPP-BG 25

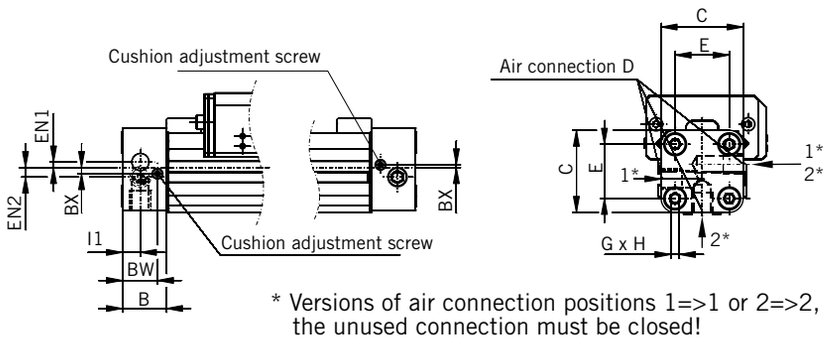

Both Air Connections at One End

A special end cap with both air connections on one side is available for situations where shortage of space, simplicity of installation or the nature of the process make it desirable.
Air supply to the other end is given via internal air passages.

In this case the end caps cannot be rotated.

End cap - Air connection both at one end
Series OSPP-BG32 and BG40

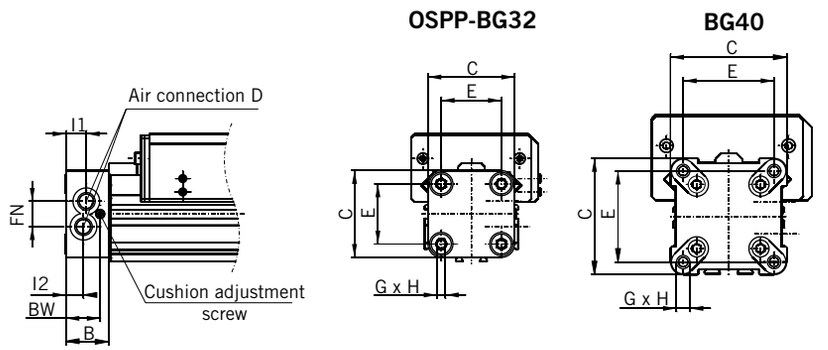

End cap - Air connection on the End-face
Series OSPP-BG25 to BG40

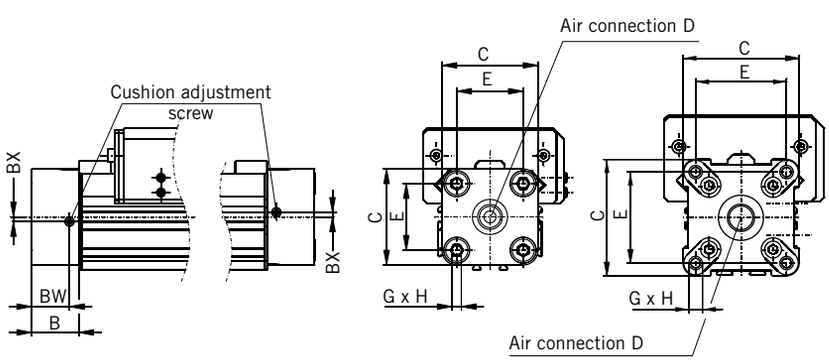

Air Connection on the End-face

In some situations it is necessary or desirable to fit a special end cap with the air connection on the end-face instead of the standard end cap with the air connection on the side.
The special end cap can also be rotated 4 x 90° to locate the cushion adjustment screw as desired.

Supplied in pairs.

Dimension Table [mm]

Series	B	C	D	E	G	H	BW	EN1	EN2	FN	I1	I2
BG25	22	41	G1/8	27	M5	15	17.5	3.6	3.9	-	9	-
BG32	25.5	52	G1/4	36	M6	15	20.5	-	-	15.2	12.2	10.5
BG40	28	69	G1/4	54	M6	15	21	-	-	17	12	12

The right to introduce technical modifications is reserved

Linear Drive Accessories

ø 25-40 mm
End Cap Mountings

OSP
ORIGA SYSTEM PLUS

For linear drive
• Series OSPP-BG

On the end-face of each cylinder end cap there are four threaded holes for mounting the cylinder. The hole layout is square, so that the mounting can be fitted to the bottom, top or either side.

The air connection can still be positioned as desired.

Mid-Section Support

For linear drive
• Series OSPP-BG

For permissible support spacings see diagram page 41.

Stainless steel version on request.

Series OSPP-BG25 and BG32: Type A1 (Supplied in pairs)

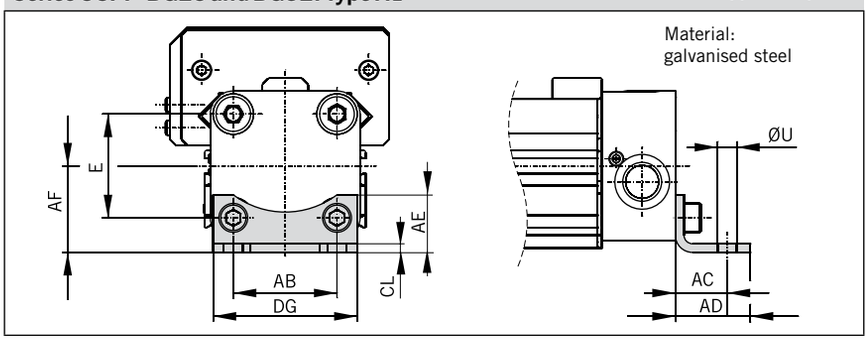

Series OSPP-BG40: Type C1 (Supplied in pairs)

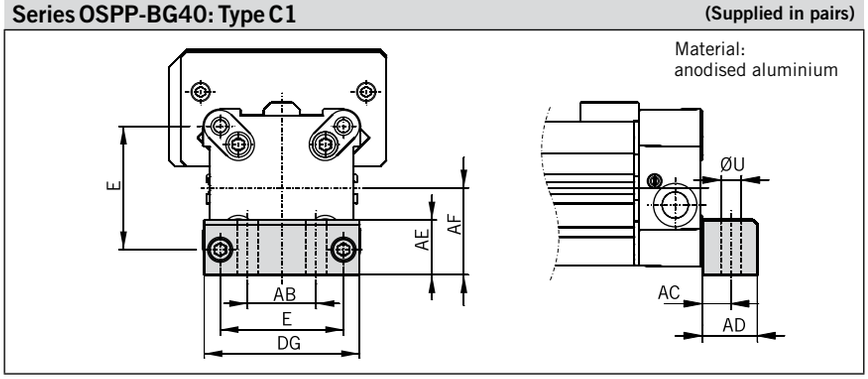

Series OSPP-BG25 and BG32: Type E1BG

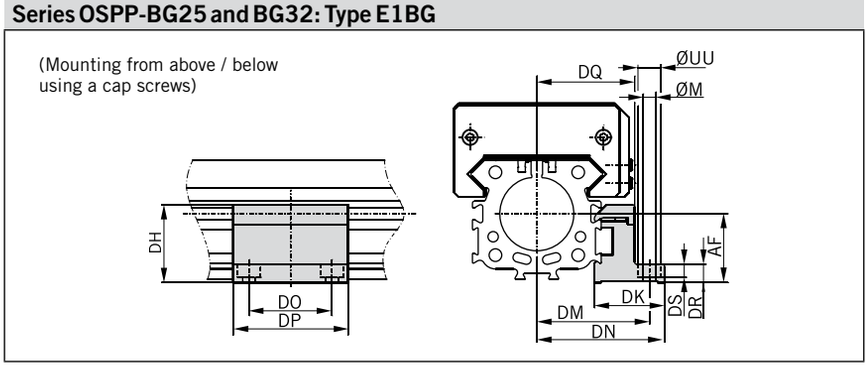

Series OSPP-BG25 and BG32: Type D1BG

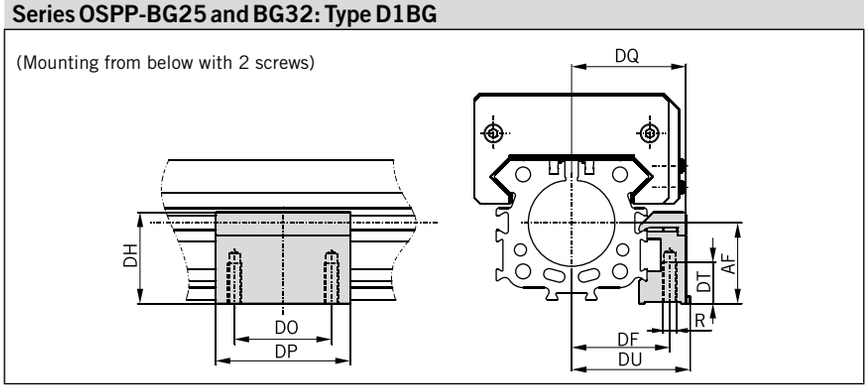

Dimension Table [mm]

Series	E	R	ØU	ØM	AB	AC	AD	AE	AF	CL	DF	DG
BG25	27	M5	5,8	5,5	27	16	22	18	22	2,5	29	39
BG32	36	M5	6,6	5,5	36	18	26	20	30	3	36,5	50
BG40	54	M6	9	7	30	12,5	24	24	38	-	39	68

													Ident-No.			
Series	**DH**	**DK**	**DM**	**DN**	**DO**	**DP**	**DQ**	**DR**	**DS**	**DT**	**DU**	**ØUU**	**Type A1***	**Type C1***	**Type E1BG**	**Type D1BG**
BG25	20	30,5	42	49,5	36	50	35	8	5,7	15	36,5	10	**2010FIL**	**-**	**21482FIL**	**21483FIL**
BG32	34	30,5	49	55,5	36	50	42,5	8	5,7	15	42,5	10	**3010FIL**	**-**	**21487FIL**	**21488FIL**
BG40	43	34	56	63	45	60	48	10	-	11	48	-	**-**	**4010FIL**	**21510FIL**	**21511FIL**

* = Pair

Order Instructions – BASIC GUIDE

1-6	7+8	9	10	11	12	13	14-18	19	20	21	22	23	24	25
OSPPBG	25	0	0	0	0	0	01100	0	0	0	**0**	0	**0**	**0**

Piston-Ø
25
32
40

Version / Piston	
0	Standard
1	Tandem
* **6**	ATEX Standard [3]

Air Connection	
0	standard
1	on the end face
2	both at one end (not turnable)
3	left standard right end face
4	right standard left end face
A	3/2 way valve VOE 24 V = Ø 25,32,40
B	3/2 way valve VOE 230 V~/110 V= Ø 25,32,40
C	3/2 way valve VOE 48 V= Ø 25,32,40
E	3/2 way valve VOE 110 V~ Ø 25,32,40

Seals	
0	standard (NBR)
1	Viton® [1]

Lubrication	
0	standard
1	slow speed [2]

Screws	
0	standard
1	stainless

Stroke
Input in mm (5 digits)

End cap position	
0	l+r 0° = in front
1	l+r 90° = underneath
2	l+r 180° = at the back
3	l+r 270° = same side as outerband
4	l 90° = underneath; r 0° = in front
5	l 180° = at the back; r 0° = in front
6	l 270° = same side as outerband; r 0° = in front
7	l 0° = in front; r 90° = underneath
8	l 180° = at the back; r 90° = underneath
9	l 270° = same side as outerband; r 90° = underneath
A	l 0° = in front; r 180° = at the back
B	l 90° = underneath; r 180° = at the back
C	l 270° = same side as outerband; r 180° = at the back
D	l 0° = in front; r 270° = same side as outerband
E	l 90° = underneath; r 270° = same side as outerband
F	l 180° = at the back; r 270° = same side as outerband

Cushioning	
0	standard

Piston Mounting	
0	without

Cover / Cable Channel	
0	standard
1	cable channel dove tail (Ø 32, 40 mm)
2	cable channel dove tail two-sided (Ø 32, 40 mm)

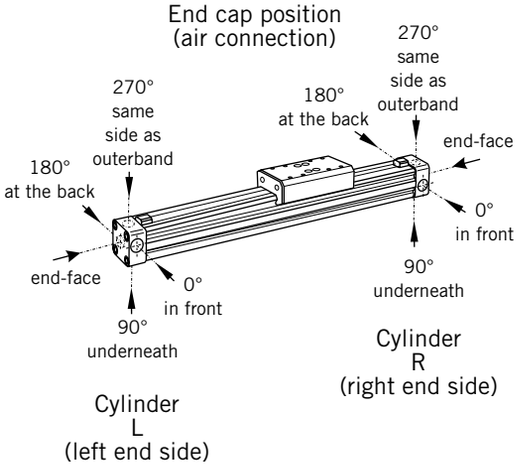

* for more informations ATEX Basic Guide see page 35

[1] Viton with VOE not possible.

[2] "Slow speed lubrication" in combination with „Viton® " seals on demand.

[3] ATEX with VOE not possible.

Accessories – please order separately

Description	Further information see
End Cap Mounting	**Page 44**
Mid-Section Support	**Page 44**
Magnetic Switches	**Page 127**

The right to introduce technical modifications is reserved

Linear Guides
Series OSP-P

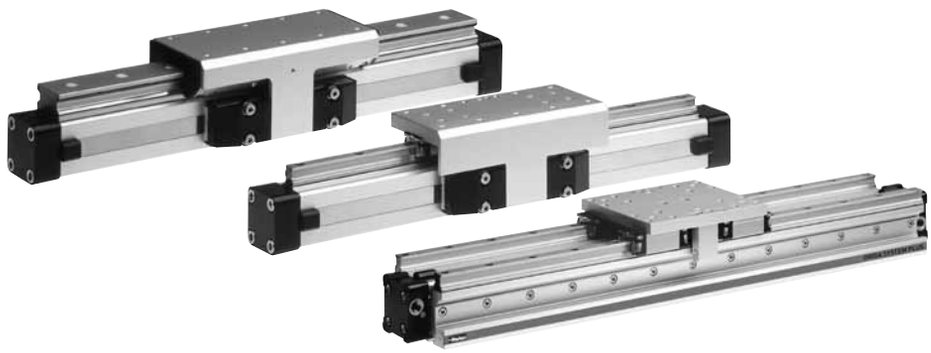

Contents

Description	Page
Overview	47-48
Plain bearing guide SLIDELINE	49-51
Roller guide POWERSLIDE	53-54
Aluminium roller guide PROLINE	59-61
Recirculating ball bearing guide STARLINE	63-69
Recirculating ball bearing guide KF	71-77
Heavy duty guide HD	79-86

The right to introduce technical modifications is reserved

OSP
ORIGA SYSTEM PLUS

Adaptive modular system

The Origa system plus – OSP – provides a comprehensive range of linear guides for the pneumatic and electric linear drives.

Advantages:

- Takes high loads and forces
- High precision
- Smooth operation
- Can be retrofitted
- Can be installed in any position

Rodless Pneumatic Cylinder Series OSP - P

Piston diameters 10 – 80 mm

See
page 15-24 (Standard)
page 35-36 (ATEX-Version)

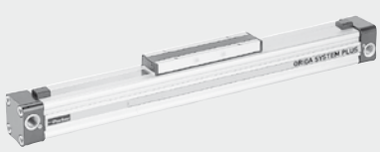

BASIC GUIDE
Compact, robust plain bearing guide for medium loads.

Piston diameters 25-40 mm

See
page 39-45 (Standard)
page 35-36 (ATEX-Version)

Linear Guides

SLIDELINE
The cost-effective plain bearing guide for moderate loads.
Active/ Passive Brake optional.

Piston diameters 16 – 80 mm

See Page 49-50 (Standard)
See Page 35-36 (ATEX-Version)

POWERSLIDE
The roller guide for heavy loads and hard application conditions

Piston diameters 16 – 50 mm

See page 53-57

PROLINE
The compact aluminium roller guide for high loads and velocities.
Active/ Passive Brake optional.
Piston diameters 16 – 50 mm

See page 59-61

STARLINE
Recirculating ball bearing guide for very high loads and precision

Piston diameters 16 – 50 mm

See page 63-69

KF GUIDE
Recirculating ball bearing guide for high loads and precision.
Correspond to FESTO dimensions (Type DGPL-KF)

Piston diameters 16 – 50 mm

See page 71-77

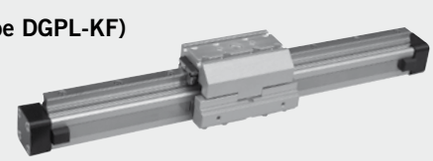

HD HEAVY DUTY GUIDE
Recirculating ball bearing guide for highest loads and greatest accuracy.

Piston diameters 25 – 50 mm

See page 79-86

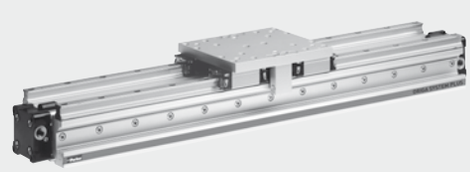

Plain Bearing Guide SLIDELINE

OSP
ORIGA SYSTEM PLUS

Series SL 16 to 80
for Linear-drive
• Series OSP-P

Versions

for pneumatic linear drive:
Series OSP-P

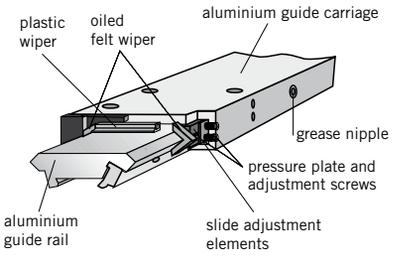

Option – Integrated Brake

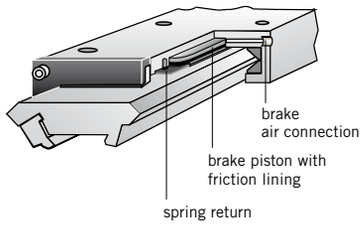

Integrated Brake (optional)
for series OSP-P25 to OSP-P50:
- Actuated by pressure
- Released by exhausting and spring return

For further technical data see also linear drives OSP-P (from page 15)

Features:

- ATEX-version (without brake) is also available (see page 35-36)
- Anodised aluminium guide rail with prism-shaped slideway arrangement
- Adjustable plastic slide elements – optional with integral brake
- Composite sealing system with plastic and felt wiper elements to remove dirt and lubricate the slideways
- Corrosion resistant version available on request
- Any length of stroke up to 5500 mm (longer strokes on request)

Loads, Forces and Moments

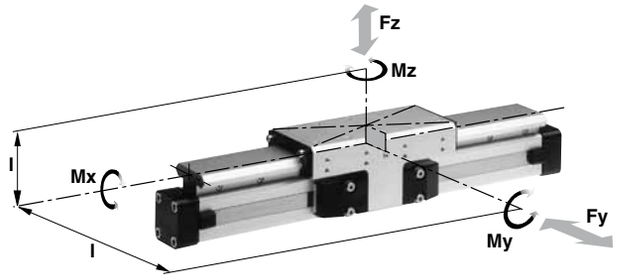

Technical Data

The table shows the maximum permissible values for smooth operation, which should not be exceeded even under dynamic conditions.

The load and moment figures apply to speeds v < 0.2 m/s.

*** Please note:**
In the cushioning diagram, add the mass of the guide carriage to the mass to be cushioned.

1) Only with integrated brake: Braking force on dry oil-free surface Values are decreased for lubricated slideways
2) Corrosion resistant fixtures available on request

Series	For linear drive	Max. moments [Nm]			Max. loads [N]	Maximum braking force at 6 bar [N] 1)	Mass of linear drive with guide [kg]		Mass * of guide carriage [kg]	Order-No. ** SLIDELINE 2) Guide without cylinder	
		Mx	My	Mz	Fy, Fz		with 0 mm stroke	increase per 100 mm stroke		without brake	with brake
SL16	OSP-P16	6	11	11	325	-	0.57	0.22	0.23	**20341**	**-**
SL25	OSP-P25	14	34	34	675	325	1.55	0.39	0.61	**20342**	**20409**
SL32	OSP-P32	29	60	60	925	545	2.98	0.65	0.95	**20196**	**20410**
SL40	OSP-P40	50	110	110	1500	835	4.05	0.78	1.22	**20343**	**20411**
SL50	OSP-P50	77	180	180	2000	1200	6.72	0.97	2.06	**20195**	**20412**
SL63	OSP-P63	120	260	260	2500	-	11.66	1.47	3.32	**20853**	**-**
SL80	OSP-P80	120	260	260	2500	-	15.71	1.81	3.32	**21000**	**-**

** Please use this order pattern: Order-No. + „stroke in mm“ (5 digits)
Example: SLIDELINE guide without brake D25 mm, stroke 1000 mm: 20342-01000

For linear drives see page 9-13, **for ATEX-version** see page 35, 36
For mountings see page 107-115

The right to introduce technical modifications is reserved

Dimensions

Series OSP-P

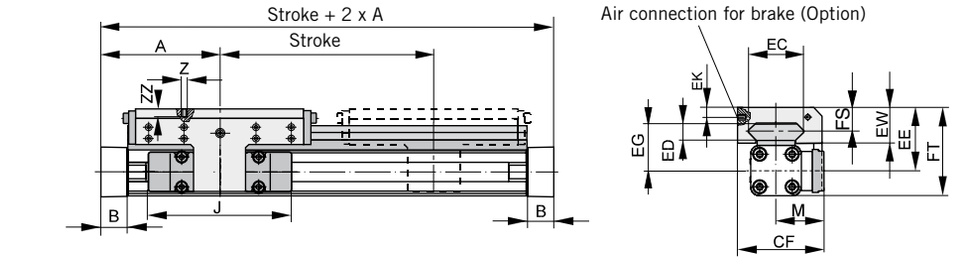

For further mounting elements and options see accessories.

For further information and technical data see data sheets for linear drives OSP-P (from page 15)

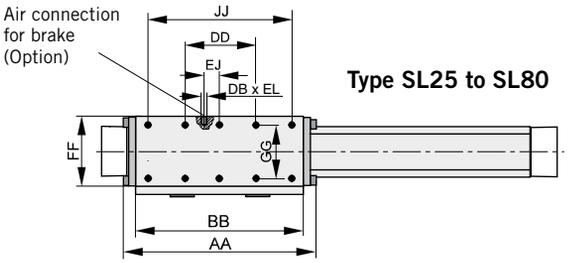

Type SL25 to SL80

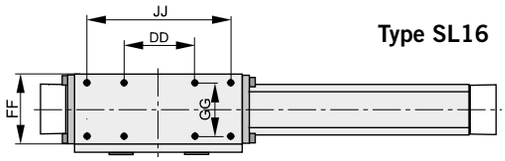

Type SL16

Dimension Table [mm]

Series	A	B	J	M	Z	AA	BB	DB	DD	CF	EC	ED	EE	EG	EJ	EK	EL	EW	FF	FT	FS	GG	JJ	ZZ
SL 16	65	14	69	31	M4	106	88	–	30	55	36	8	40	30	–	–	–	22	48	55	14	36	70	8
SL 25	100	22	117	40.5	M6	162	142	M5	60	72.5	47	12	53	39	22	6	6	30	64	73.5	20	50	120	12
SL 32	125	25.5	152	49	M6	205	185	M5	80	91	67	14	62	48	32	6	6	33	84	88	21	64	160	12
SL 40	150	28	152	55	M6	240	220	M5	100	102	77	14	64	50	58	6	6	34	94	98.5	21.5	78	200	12
SL 50	175	33	200	62	M6	284	264	M5	120	117	94	14	75	56	81	6	6	39	110	118.5	26	90	240	16
SL 63	215	38	256	79	M8	312	292	–	130	152	116	18	86	66	–	–	–	46	152	139	29	120	260	14
SL 80	260	47	348	96	M8	312	292	–	130	169	116	18	99	79	–	–	–	46	152	165	29	120	260	14

Mid-Section Support

(for versions see page 109)

Mid-section supports are required from a certain stroke length to prevent excessive deflection and vibration of the linear drive. The diagrams show the maximum permissible unsupported length in relation to loading.
A distinction must be drawn between loading 1 and loading 2.
Deflection of 0.5 mm max. between supports is permissible.

Note:
For speeds v > 0.5 m/s the distance between supports should not exceed 1 m.

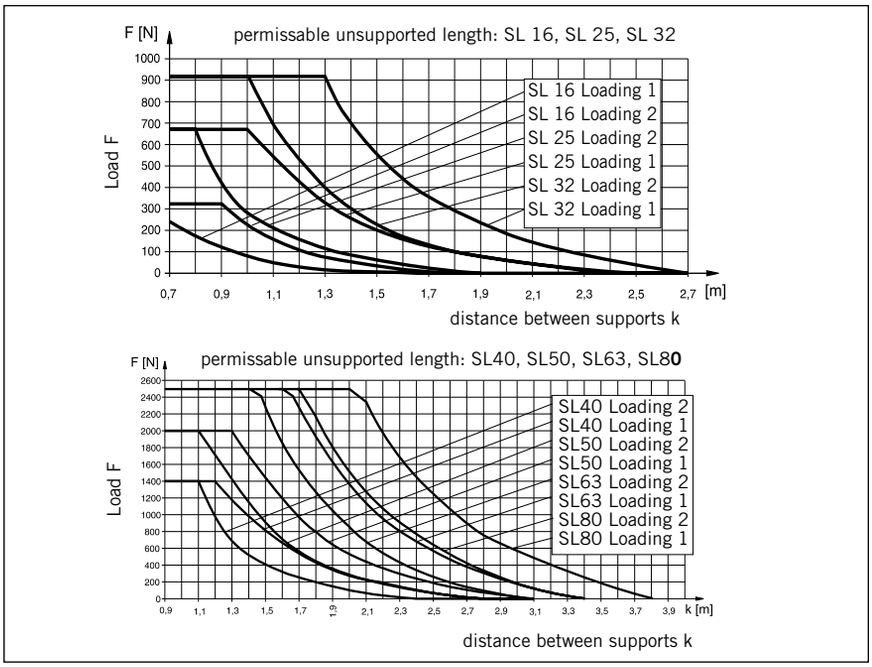

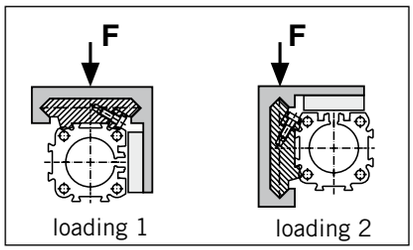

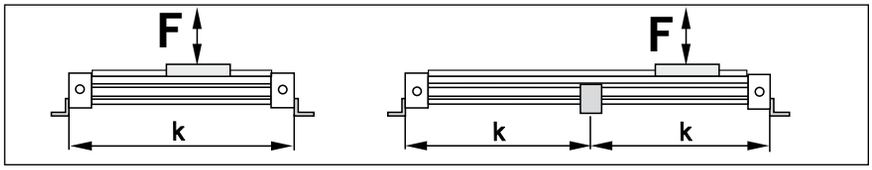

Order Instructions – SLIDELINE

1-4	5+6	7	8	9	10	11	12-16	17	18	19	20	21	22	23	24	25
OSPP	25	0	0	0	0	0	01100	0	0	0	0	0	0	**0**	**0**	0

Piston-Ø
16
25
32
40
50
63
80

Stroke
Input in mm (5 digits)

Piston Mounting	
0	without

Measuring system	
0	without
X	SFI 0.1 mm
Y	SFI 1 mm

Screws	
0	standard
1	stainless

Cushioning	
0	standard

Version / Piston	
0	standard
1	Tandem

Lubrication	
0	standard
1	slow speed [2]

End cap position	
0	l+r 0° = in front
1	l+r 90° = underneath
2	l+r 180° = at the back
3	l+r 270° = same side as outerband
4	l 90° = underneath; r 0° = in front
5	l 180° = at the back; r 0° = in front
6	l 270° = same side as outerband; r 0° = in front
7	l 0° = in front; r 90° = underneath
8	l 180° = at the back; r 90° = underneath
9	l 270° = same side as outerband; r 90° = underneath
A	l 0° = in front; r 180° = at the back
B	l 90° = underneath; r 180° = at the back
C	l 270° = same side as outerband; r 180° = at the back
D	l 0° = in front; r 270° = same side as outerband
E	l 90° = underneath; r 270° = same side as outerband
F	l 180° = at the back; r 270° = same side as outerband

Guides/ Brakes/ Inversion	
0	without
2	Slideline SL Ø 16-80
3	Slideline with Activebrake SL-AB Ø 25-50
4	Slideline with Multibrake SL-MB Ø 25-80

Cover / Cable Channel	
0	standard
1	cable channel
2	cable channel two-sided
X	without Cover rail

Air Connection	
0	standard
1	on the end face
2	both at one end (not turnable)
3	left standard right end face
4	right standard left end face
A	3/2 way valve VOE 24 V = Ø 25,32,40, 50
B	3/2 way valve VOE 230 V~/110 V= Ø 25,32,40,50
C	3/2 way valve VOE 48 V= Ø 25,32,40,50
E	3/2 way valve VOE 110 V~ Ø 25,32,40,50

Seals	
0	standard (NBR)
1	Viton® [1]

add. Guide Carriage	
0	without
2	Guide Carriage Slideline SL Ø 16-80
3	Guide Carriage Slideline Activebrake SL-AB Ø 26-50
4	Guide Carriage Slideline Multibrake SL-MB Ø 25-80
M	Guide Carriage Slideline Multibrake SL-MB without brakefunction Ø 25-80

End cap position (air connection)

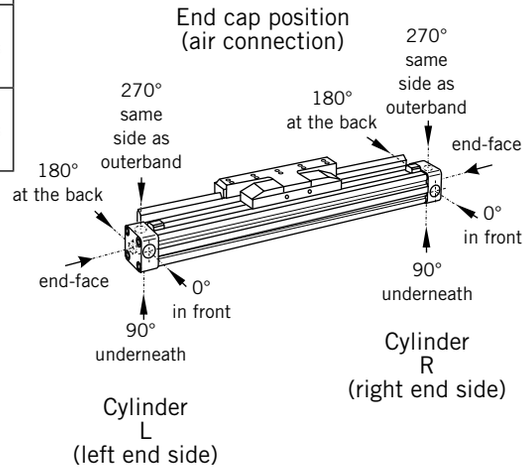

[1] Viton with VOE not possible.

[2] "Slow speed lubrication" in combination with „Viton® " seals on demand.

The right to introduce technical modifications is reserved

Roller Guide POWERSLIDE

OSP
ORIGA SYSTEM PLUS

Series PS 16 to 50
for Linear-drive
• Series OSP-P

Versions

For pneumatic linear drive:
Series OSP-P

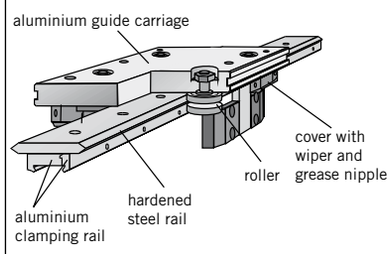

Loads, Forces and Moments

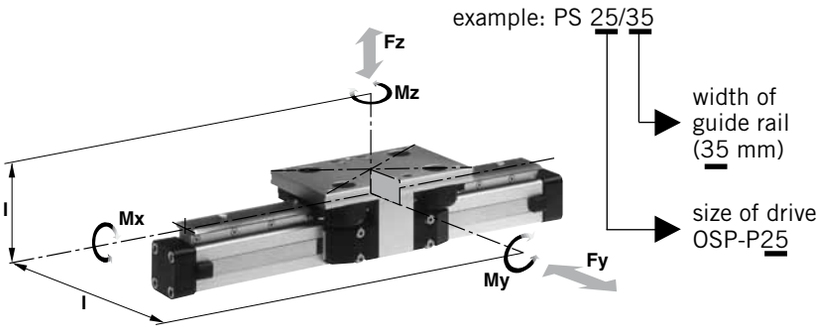

Features:

- Anodised aluminium guide carriage with vee rollers having 2 rows of ball bearings
- Hardened steel guide rail
- Several guide sizes can be used on the same drive
- Corrosion resistance version available on request
- Max. speed v = 3 m/s,
- Tough roller cover with wiper and grease nipple
- Any length of stroke up to 3500 mm, (longer strokes on request)

Technical Data

The Table shows the maximum permissible values for smooth operation, which should not be exceeded even under dynamic conditions.
For further information and technical data see data sheets for linear drives OSP-P (from page 15).

* **Please note:**
In the cushioning diagram, add the mass of the guide carriage to the mass to be cushioned.

Series	For linear drive	Max. Moment [Nm]			Max. loads [N]	Mass of linear drive with guide [kg]		Mass * guide carriage [kg]	**Order-No ** POWERSLIDE** Guide without cylinder [1]
		Mx	My	Mz	Fy, Fz	with 0 mm stroke	increase per 100 mm stroke		
PS 16/25	OSP-P16	14	45	45	1400	0.93	0.24	0.7	**20285**
PS 25/25	OSP-P25	14	63	63	1400	1.5	0.4	0.7	**20015**
PS 25/35	OSP-P25	20	70	70	1400	1.7	0.4	0.8	**20016**
PS 25/44	OSP-P25	65	175	175	3000	2.6	0.5	1.5	**20017**
PS 32/35	OSP-P32	20	70	70	1400	2.6	0.6	0.8	**20286**
PS 32/44	OSP-P32	65	175	175	3000	3.4	0.7	1.5	**20287**
PS 40/44	OSP-P40	65	175	175	3000	4.6	1.1	1.5	**20033**
PS 40/60	OSP-P40	90	250	250	3000	6	1.3	2.2	**20034**
PS 50/60	OSP-P50	90	250	250	3000	7.6	1.4	2.3	**20288**
PS 50/76	OSP-P50	140	350	350	4000	11.5	1.8	4.9	**20289**

[1] corrosion resistance version available on request (max. loads and moments are 25% lower)

** Please use this order pattern: Order-No. + „stroke in mm“ (5 digits)
Example: PS25/25 Guide D25 mm, stroke 1000 mm: 20015-01000

For **linear drives** see page 9-13
For **mountings** see page 107-115

The right to introduce technical modifications is reserved

Dimensions

Series OSP-P

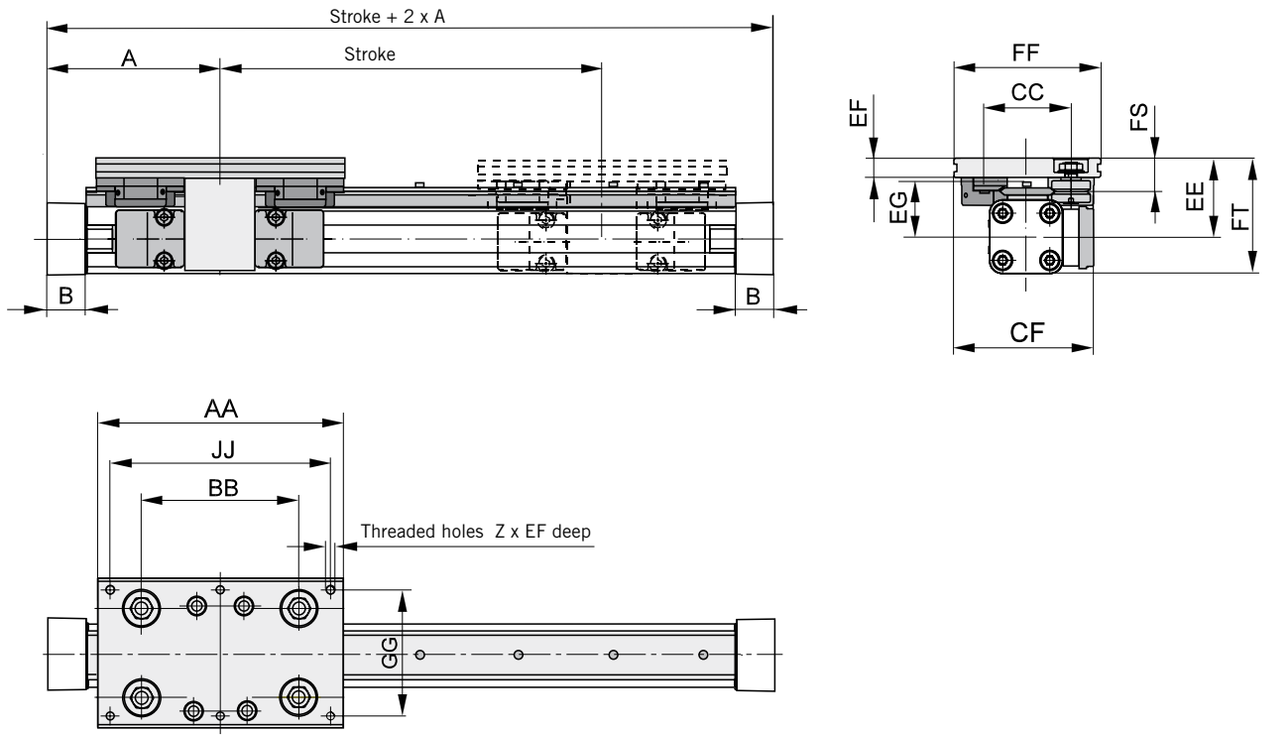

Dimension Table [mm]

Series	A	B	Z	AA	BB	CC	CF	EE	EF	EG	FF	FS	FT	GG	JJ
PS 16/25	65	14	4xM6	120	65	47	80	49	12	35	80	21	64	64	100
PS 25/25	100	22	6xM6	145	90	47	79.5	53	11	39	80	20	73.5	64	125
PS 25/35	100	22	6xM6	156	100	57	89.5	52.5	12.5	37.5	95	21.5	73	80	140
PS 25/44	100	22	6xM8	190	118	73	100	58	15	39	116	26	78.5	96	164
PS 32/35	125	25.5	6xM6	156	100	57	95.5	58.5	12.5	43.5	95	21.5	84.5	80	140
PS 32/44	125	25.5	6xM8	190	118	73	107	64	15	45	116	26	90	96	164
PS 40/44	150	28	6xM8	190	118	73	112.5	75	15	56	116	26	109.5	96	164
PS 40/60	150	28	6xM8	240	167	89	122.5	74	17	54	135	28.5	108.5	115	216
PS 50/60	175	33	6xM8	240	167	89	130.5	81	17	61	135	28.5	123.5	115	216
PS 50/76	175	33	6xM10	280	178	119	155.5	93	20	64	185	39	135.5	160	250

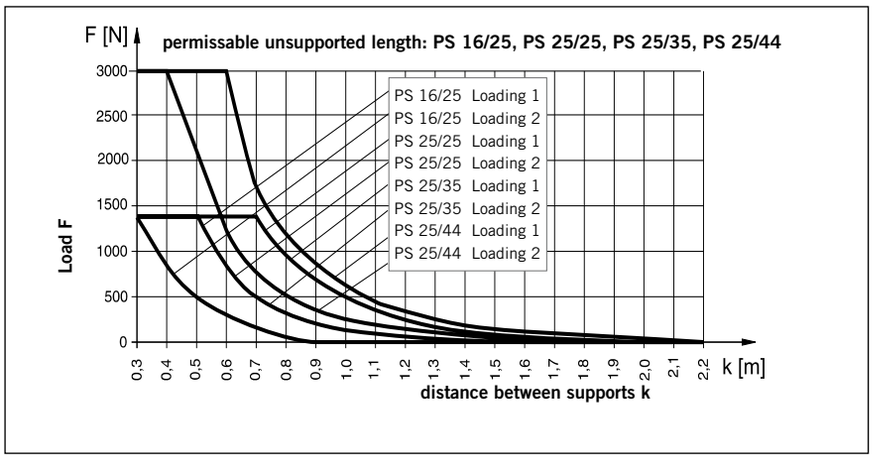

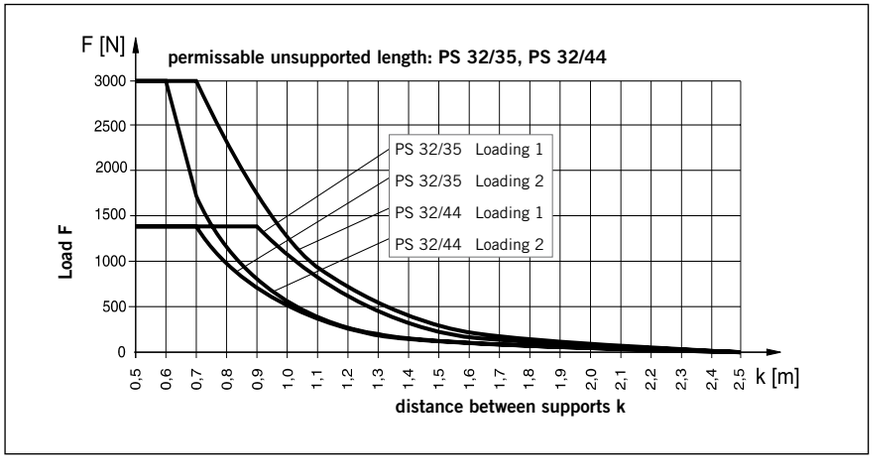

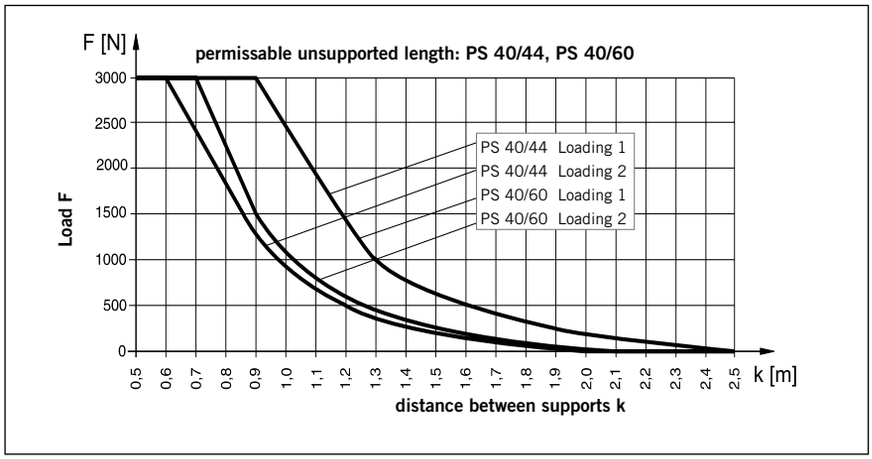

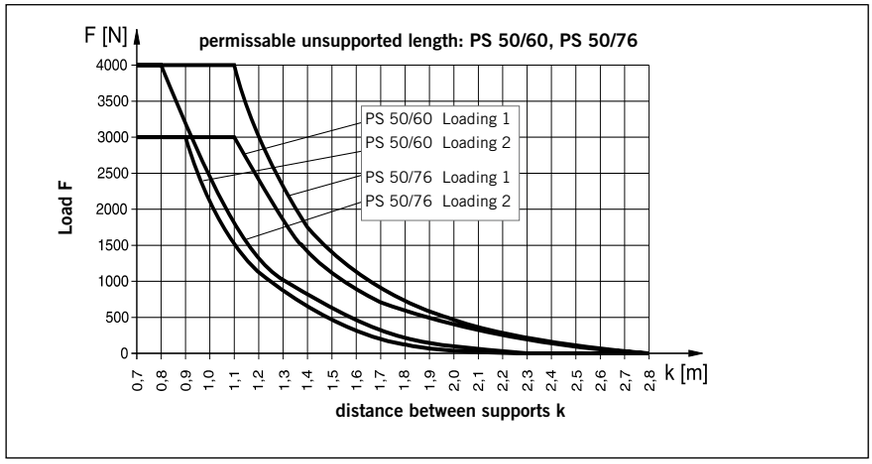

Mid-Section Support

(for versions, see accessories)

Mid section supports are required from a certain stroke length to prevent excessive deflection and vibration of the linear drive. The diagrams show the maximum permissible unsupported length in relation to loading.
A distinction must be drawn between loading 1 and loading 2.
Deflection of 0.5 mm max. between supports is permissible.

Note
For speeds v > 0.5 m/s the distance between supports should not exceed 1m.

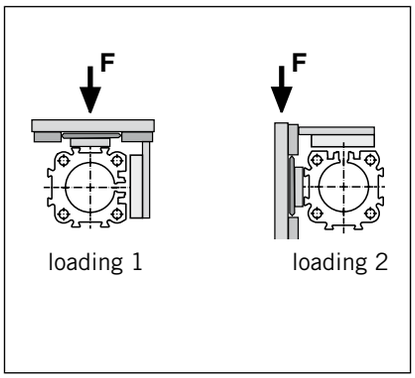

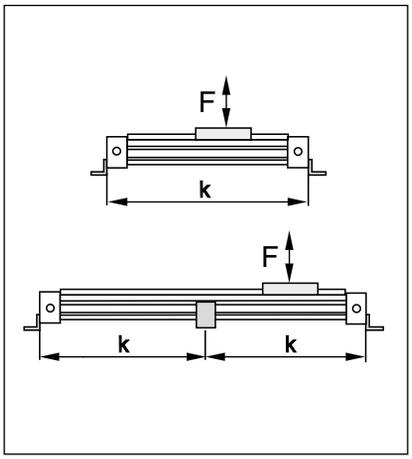

For further mounting elements and options see from page 101.

The right to introduce technical modifications is reserved

Service life

Calculation of service life is achieved in two stages:

- Determination of load factor LF from the loads to be carried
- Calculation of service life in km

1. Calculation of load factor L_F

$$L_F = \frac{Mx}{Mx_{max}} + \frac{My}{My_{max}} + \frac{Mz}{Mz_{max}} + \frac{Fy}{Fy_{max}} + \frac{Fz}{Fz_{max}}$$

with combined loads, L_F should not exceed the value 1.

Lubrication

For maximum system life, lubrication of the rollers must be maintained at all times.

Only high quality Lithium based greases should be used.

Lubrication intervals are dependant on environmental conditions (temperature, running speed, grease quality etc.) therefore the installation should be regularly inspected.

2. Service life calculation

- **For PS 16/25, PS 25/25, PS 25/35, and PS 32/35** — **Service life [km] =** $\frac{106}{(L_F + 0{,}02)^3}$
- **For PS 25/44, PS 32/44, PS 40/44, PS 40/60 and PS 50/60:** — **Service life [km] =** $\frac{314}{(L_F + 0{,}015)^3}$
- **For PS 50/76:** — **Service life [km] =** $\frac{680}{(L_F + 0{,}015)^3}$

Order Instructions – POWERSLIDE

1-4	5+6	7	8	9	10	11	12-16	17	18	19	20	21	22	23	24	25
OSPP	25	0	0	0	0	0	01100	0	0	0	0	0	0	**0**	**0**	0

Piston-Ø
16
25
32
40
50

Stroke
Input in mm (5 digits)

Piston Mounting	
0	without

Measuring system	
0	without
X	SFI 0.1 mm
Y	SFI 1 mm

Screws	
0	standard
1	stainless

Cushioning	
0	standard
1	max. length [3]

Version / Piston	
0	standard
1	Tandem

Lubrication	
0	standard
1	Slow speed [2] [3]

End cap position	
0	l+r 0° = in front
1	l+r 90° = underneath
2	l+r 180° = at the back
3	l+r 270° = same side as outerband
4	l 90° = underneath; r 0° = in front
5	l 180° = at the back; r 0° = in front
6	l 270° = same side as outerband; r 0° = in front
7	l 0° = in front; r 90° = underneath
8	l 180° = at the back; r 90° = underneath
9	l 270° = same side as outerband; r 90° = underneath
A	l 0° = in front; r 180° = at the back
B	l 90° = underneath; r 180° = at the back
C	l 270° = same side as outerband; r 180° = at the back
D	l 0° = in front; r 270° = same side as outerband
E	l 90° = underneath; r 270° = same side as outerband
F	l 180° = at the back; r 270° = same side as outerband

Guides/ Brakes/ Inversion	
0	without
E	PSXX/25 Powerslide Ø 16, 25
F	PSXX/35 Powerslide Ø 25, 32
G	PSXX/44 Powerslide Ø 25, 32, 40
H	PSXX/60 Powerslide Ø 40, 50
I	PSXX/76 Powerslide Ø 50

Cover / Cable Channel	
0	standard
1	cable channel
2	cable channel two-sided
X	without Cover rail

Air Connection	
0	standard
1	on the end face
2	both at one end (not turnable)
3	left standard right end face
4	right standard left end face
A	3/2 way valve VOE 24 V= Ø 25,32,40, 50
B	3/2 way valve VOE 230 V~/110 V= Ø 25,32,40,50
C	3/2 way valve VOE 48 V= Ø 25,32,40,50
E	3/2 way valve VOE 110 V~ Ø 25,32,40,50

Seals	
0	standard (NBR)
1	Viton® [1]

add. Guide Carriage	
0	without
E	Guide Carriage Powerslide PSXX/25 Ø 16, 25
F	Guide Carriage Powerslide PSXX/35 Ø 25, 32
G	Guide Carriage Powerslide PSXX/44 Ø 25, 32, 40
H	Guide Carriage Powerslide PSXX/60 Ø 40, 50
I	Guide Carriage Powerslide PSXX/76 Ø 50

End cap position (air connection)

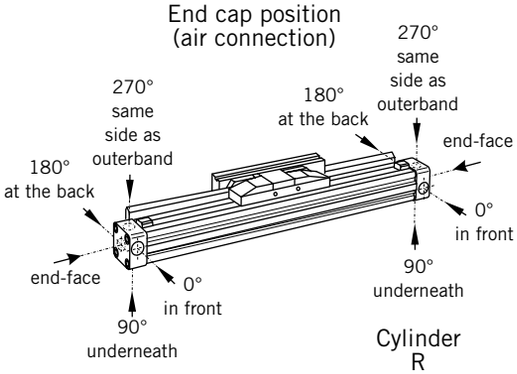

Cylinder R (right end side)

Cylinder L (left end side)

[1] Viton with VOE not possible.
[2] "Slow speed lubrication" in combination with „Viton® " seals on demand.
[3] „Lubrication slow speed" in combination with „max. cushioning length" not possible.

The right to introduce technical modifications is reserved

Aluminium Roller Guide PROLINE

OSP
ORIGA SYSTEM PLUS

Series PL 16 to 50
for Linear-drive
• Series OSP-P

Versions

for pneumatic linear drive:
Series OSP-P

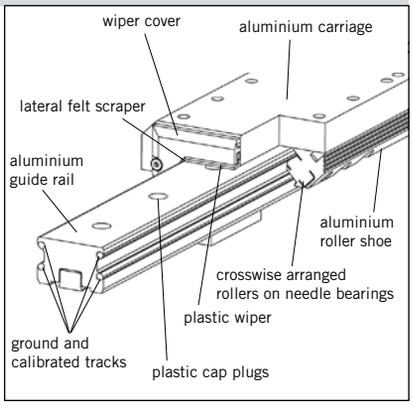

Features:

- High precision
- High velocities (10 m/s)
- Smooth operation - low noise
- Integated wiper system
- Long life lubrication
- Compact dimensions - compatible to Slideline plain bearing guide
- Any length of stroke up to 3750 mm

Technical Data

The table shows the maximal permissible loads. If multiple moments and forces act upon the cylinder simultaneously, the following equation applies:

$$\frac{Mx}{Mx_{max}} + \frac{My}{My_{max}} + \frac{Mz}{Mz_{max}} + \frac{Fy}{Fy_{max}} + \frac{Fz}{Fz_{max}} \leq 1$$

The sum of the loads should not exceed >1. With a load factor of less than 1, service life is 8000 km

The table shows the maximum permissible values for light, shock-free operation, which must not be exceeded even under dynamic conditions.

Option – Integrated Brake

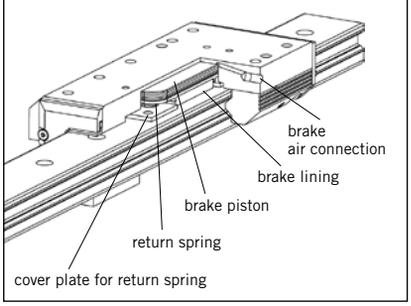

Integrated Brake (optional)
for Series OSP-P25 to OSP-P50:

- Actuated by pressurisation
- Release by depressurisation and spring actuation

Loads, Forces and Moments

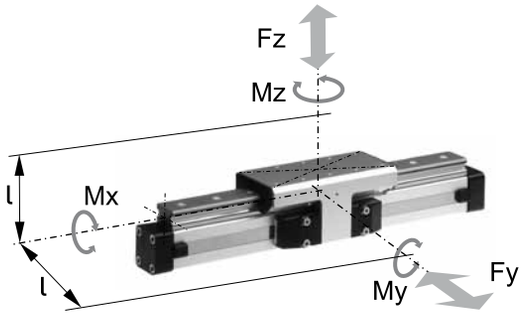

*** Please note:**
The mass of the carriage has to be added to the total moving mass when using the cushioning diagram.

Series	For linear drive	Max. Moment [Nm]			Max. loads [N]	Maximum braking force at 6 bar [N] 1)	Mass of linear drive with guide [kg]		Mass * guide carriage [kg]	Order-No ** PROLINE Guide without cylinder	
		Mx	My	Mz	Fy, Fz		with 0 mm stroke	increase per 100 mm stroke		without Brake	with Brake
PL 16	OSP-P16	8	12	12	542	-	0.55	0.19	0.24	**20855**	**-**
PL 25	OSP-P25	16	39	39	857	on request	1.65	0.40	0.75	**20856**	**20860**
PL 32	OSP-P32	29	73	73	1171	on request	3.24	0.62	1.18	**20857**	**20861**
PL 40	OSP-P40	57	158	158	2074	on request	4.35	0.70	1.70	**20858**	**20862**
PL 50	OSP-P50	111	249	249	3111	on request	7.03	0.95	2.50	**20859**	**20863**

** Please use this order pattern: Order-No. + „stroke in mm“ (5 digits)
Example: PROLINE guide without brake D16 mm, stroke 1000 mm: 20855-01000

For **linear drives** see page 9-13
For **mountings** see page 107-115

The right to introduce technical modifications is reserved

Dimension Table [mm] Series OSP-P PL16, PL25, PL32, PL40, PL50

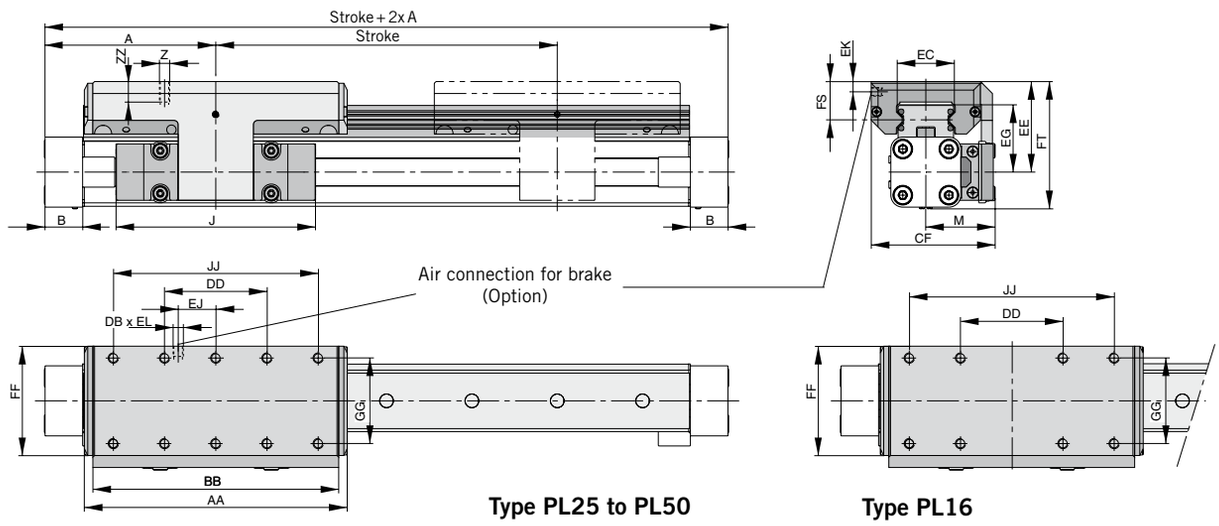

Dimension Table [mm] Series OSP-P PL16, PL25, PL32, PL40, PL50

Series	A	B	J	M	Z	AA	BB	DB	DD	CF	EC	EE	EG	EJ	EK	EL	FF	FS	FT	GG	JJ	ZZ
PL16	65	14	69	31	M4	98	88	-	30	55	23	40	30	-	-	-	48	17	55	36	70	8
PL25	100	22	117	40.5	M6	154	144	M5	60	72.5	32.5	53	39	22	6	6	64	23	73.5	50	120	12
PL32	125	25.5	152	49	M6	197	187	M5	80	91	42	62	48	32	6	6	84	25	88	64	160	12
PL40	150	28	152	55	M6	232	222	M5	100	102	47	64	50.5	58	6	6	94	23.5	98.5	78	200	12
PL50	175	33	200	62	M6	276	266	M5	120	117	63	75	57	81	6	6	110	29	118.5	90	240	16

Mid-Section Support

(For versions, see page 107-115)
Mid-section supports are required from a certain stroke length to prevent excessive deflection and vibration of the linear drive. The diagrams show the maximum permissible unsupported length in relation to loading. A distinction must be drawn between loading 1 and loading 2. Deflection of 0.5 mm max. between supports is permissible.

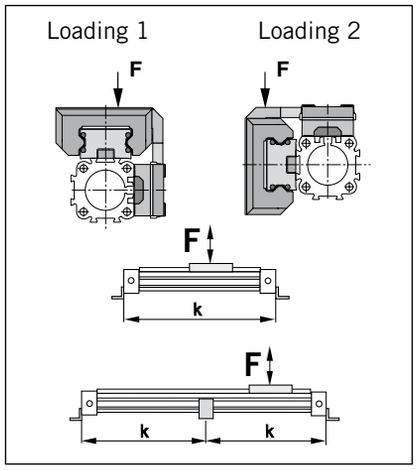

Note:

For speeds v > 0.5 m/s the distance between supports should not exceed 1 m.

Permissible Unsupported Length PL16, PL25, PL32, PL40 and PL50

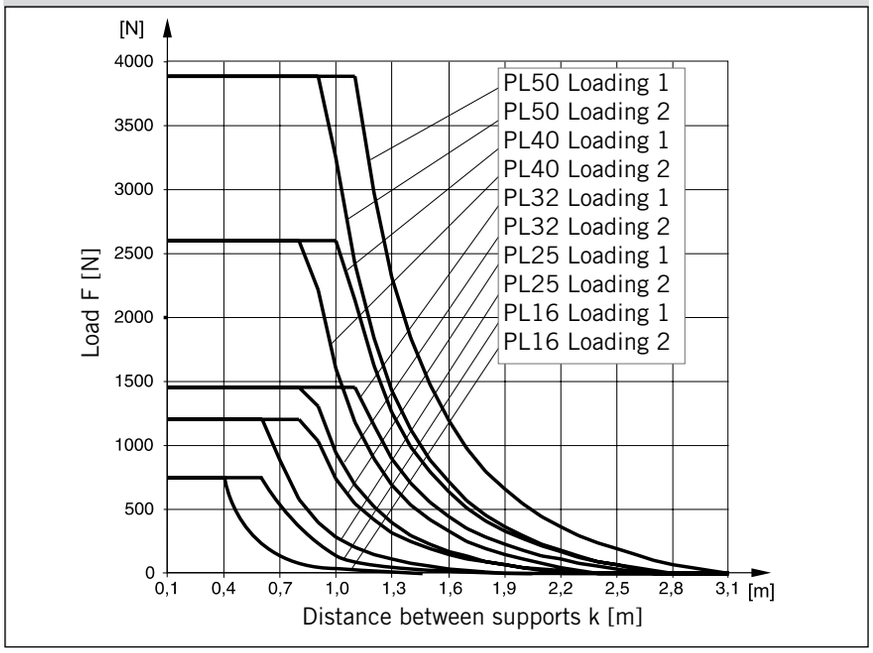

Order Instructions – PROLINE

1-4	5+6	7	8	9	10	11	12-16	17	18	19	20	21	22	23	24	25
OSPP	25	0	0	0	0	0	01100	0	0	0	0	0	0	**0**	**0**	0

Piston-Ø
16
25
32
40
50

Stroke
Input in mm (5 digits)

Piston Mounting	
0	without

Measuring system	
0	without
X	SFI 0.1 mm
Y	SFI 1 mm

Screws	
0	standard

Cushioning	
0	standard
1	max. length [3]

Version / Piston	
0	standard
1	Tandem

Lubrication	
0	standard
1	Slow speed [2) 3)]

End cap position	
0	l+r 0° = in front
1	l+r 90° = underneath
2	l+r 180° = at the back
3	l+r 270° = same side as outerband
4	l 90° = underneath; r 0° = in front
5	l 180° = at the back; r 0° = in front
6	l 270° = same side as outerband; r 0° = in front
7	l 0° = in front; r 90° = underneath
8	l 180° = at the back; r 90° = underneath
9	l 270° = same side as outerband; r 90° = underneath
A	l 0° = in front; r 180° = at the back
B	l 90° = underneath; r 180° = at the back
C	l 270° = same side as outerband; r 180° = at the back
D	l 0° = in front; r 270° = same side as outerband
E	l 90° = underneath; r 270° = same side as outerband
F	l 180° = at the back; r 270° = same side as outerband

Guides/ Brakes/ Inversion	
0	without
6	Proline PL Ø 16-50
7	Proline with Activebrake PL-AB Ø 25-50
8	Proline with Multibrake PL-MB Ø 25-50

Cover / Cable Channel	
0	standard
1	cable channel
2	cable channel two-sided
X	without Cover rail

Air Connection	
0	standard
1	on the end face
2	both at one end (not turnable)
3	left standard right end face
4	right standard left end face
A	3/2 way valve VOE 24 V = Ø 25,32,40, 50
B	3/2 way valve VOE 230 V~/110 V= Ø 25,32,40,50
C	3/2 way valve VOE 48 V= Ø 25,32,40,50
E	3/2 way valve VOE 110 V~ Ø 25,32,40,50

Seals	
0	standard (NBR)
1	Viton® [1)]

add. Guide Carriage	
0	without
6	Guide Carriage Proline PL Ø 16-50
7	Guide Carriage Proline Activebrake PL-AB Ø 25-50
8	Guide Carriage Proline Multibrake PL-MB Ø 25-50
N	Guide Carriage Proline Multibrake PL-MB without brake function Ø 25-50

End cap position (air connection)

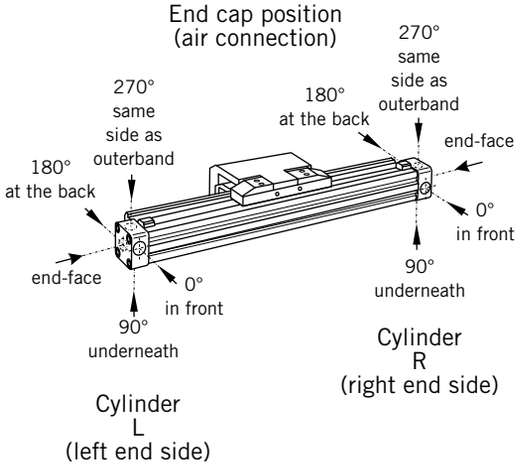

[1)] Viton with VOE not possible.
[2)] "Slow speed lubrication" in combination with „Viton®" seals on demand.
[3)] „Lubrication slow speed" in combination with „max. cushioning length" not possible.

The right to introduce technical modifications is reserved

Recirculating Ball Bearing Guide STARLINE

OSP
ORIGA SYSTEM PLUS

Series STL 16 to 50
for Linear Drive Series OSP-P

Versions

for pneumatic linear drive:
Series OSP-P

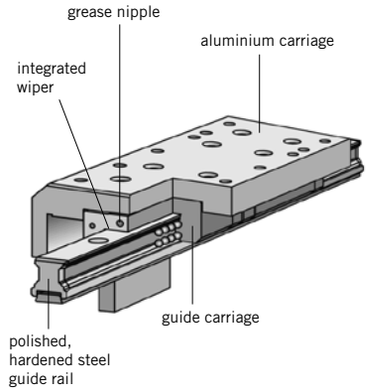

Loads, Forces and Moments

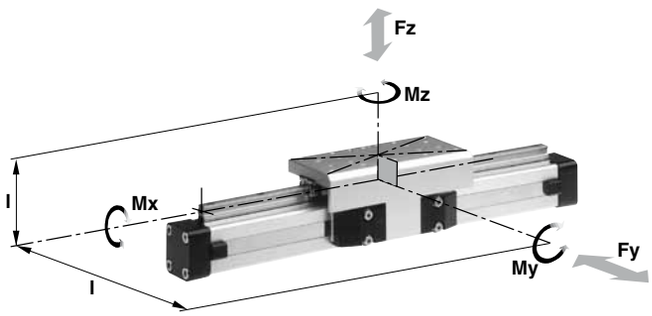

Features:
- Polished and hardened steel guide rail
- For very high loads in all directions
- High precision
- Integrated wiper system
- Integrated grease nipples
- Any length of stroke up to 3700 mm
- Anodized aluminium guide carriage – dimensions compatible with OSP guides SLIDELINE and PROLINE
- Installation height (STL16 - 32) compatible with OSP guides SLIDELINE and PROLINE
- Maximum speed
  STL16: v = 3 m/s
  STL25 to 50: v = 5 m/s

Technical Data
The table shows the maximum permissible loads. If multiple moments and forces act upon the cylinder simultaneously, the following equation applies:

$$\frac{Mx}{Mx_{max}} + \frac{My}{My_{max}} + \frac{Mz}{Mz_{max}} + \frac{Fy}{Fy_{1max}} + \frac{Fz}{Fz_{max}} \leq 1$$

The sum of the loads should not exceed >1

The table shows the maximum permissible values for light, shock-free operation, which must not be exceeded even under dynamic conditions.

*** Please note:**
The mass of the carriage has to be added to the total moving mass when using the cushioning diagram.

Series	For linear drive	Max. Moment [Nm]			Max. loads [N]		Mass of linear drive with guide [kg]		Mass * guide carriage [kg]	Order-No ** STARLINE Guide without cylinder
		Mx	My	Mz	Fy	Fz	with 0 mm stroke	increase per 100 mm stroke		
STL 16	OSP-P16	15	30	30	1000	1000	0.598	0.210	0.268	**21111**
STL 25	OSP-P25	50	110	110	3100	3100	1.733	0.369	0.835	**21112**
STL 32	OSP-P32	62	160	160	3100	3100	2.934	0.526	1.181	**21113**
STL 40	OSP-P40	150	400	400	4000	7500	4.452	0.701	1.901	**21114**
STL 50	OSP-P50	210	580	580	4000	7500	7.361	0.936	2.880	**21115**

** Please use this order pattern: Order-No. + „stroke in mm“ (5 digits)
Example: STARLINE guide D16 mm, stroke 1000 mm: 21111-01000

For **linear drives** see page 9-13
For **mountings** see page 107-115

The right to introduce technical modifications is reserved

Dimensions Series OSP-P STL16 to STL 50

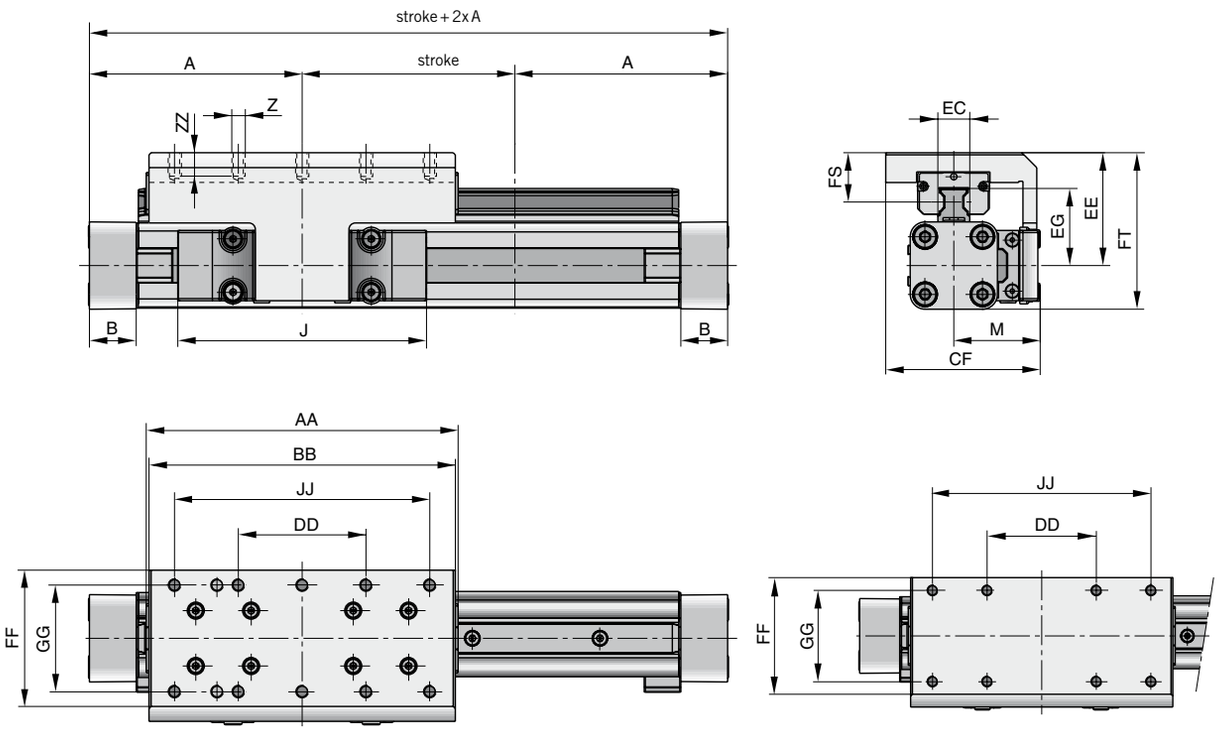

Type STL25 to PL50

Type STL16

Dimension Table [mm] Series OSP-P STL16 to STL50

Series	A	B	J	M	Z	AA	BB	CF	DD	EC	EE	EG	FF	FS	FT	GG	JJ	ZZ
STL16	65	14	69	31	M4	93	90	55	30	15	40	24.6	48	18	55	36	70	8
STL25	100	22	117	40.5	M6	146.6	144	72.5	60	15	53	36.2	64	23.2	73.5	50	120	12
STL32	125	25.5	152	49	M6	186.6	184	91	80	15	62	42.2	84	26.2	88	64	160	12
STL40	150	28	152	55	M6	231	226	102	100	20	72	51.6	94	28.5	106.5	78	200	12
STL50	175	33	200	62	M6	270.9	266	117	120	23	85	62.3	110	32.5	128.5	90	240	16

Permissible Unsupported Length STL16 to STL50

Loading 1 – Top carrier

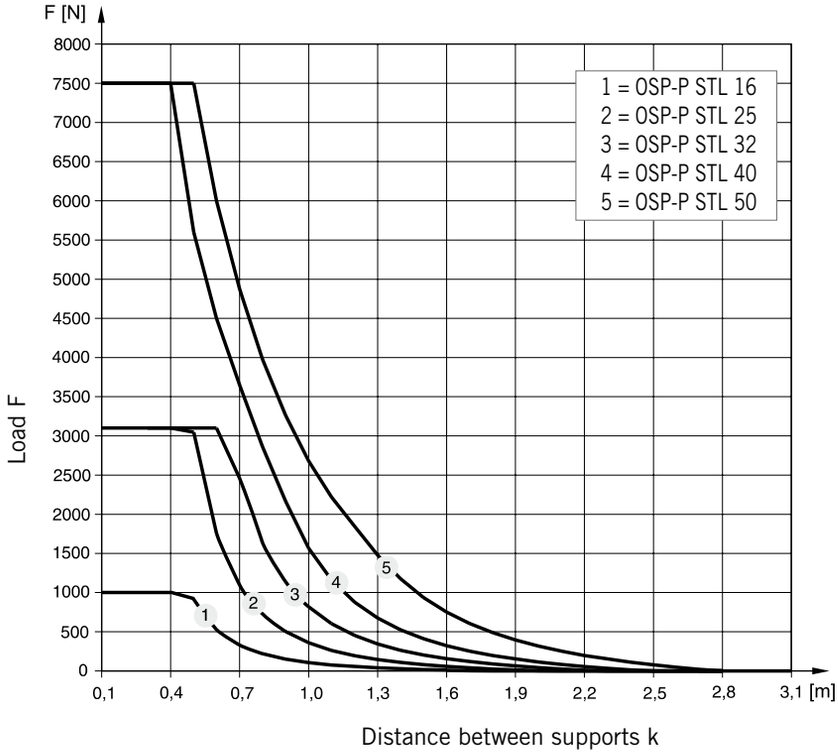

Permissible Unsupported Length STL16 to STL50

Loading 2 – Side carrier

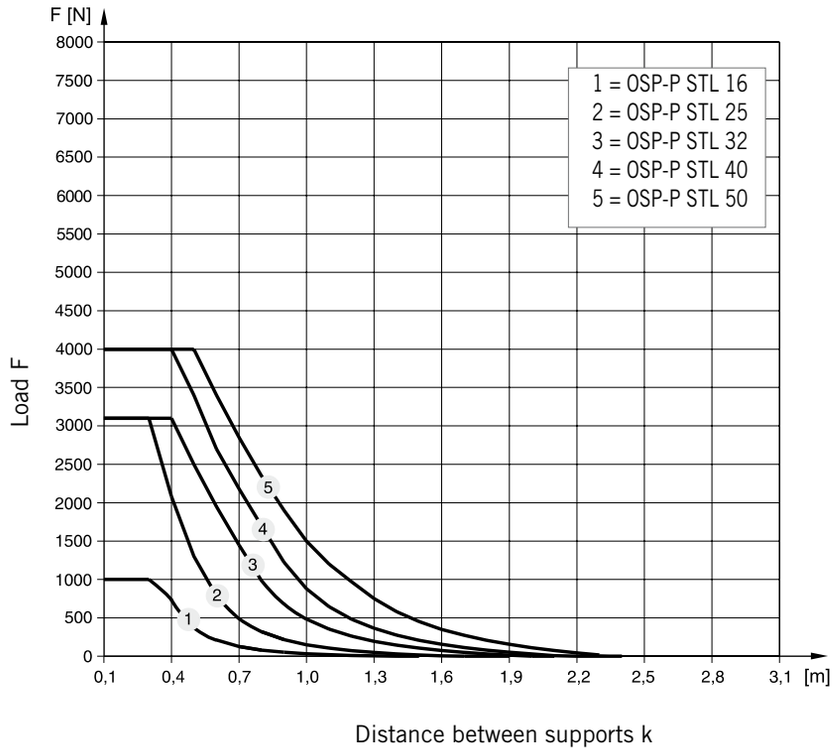

Mid-Section Support

(For versions, see page 106-107)

Mid-section supports are required from a certain stroke length to prevent excessive deflection and vibration of the linear drive. The diagrams show the maximum permissible unsupported length in relation to loading. A distinction must be drawn between loading 1 and loading 2. Deflection of 0.5 mm max. between supports is permissible.

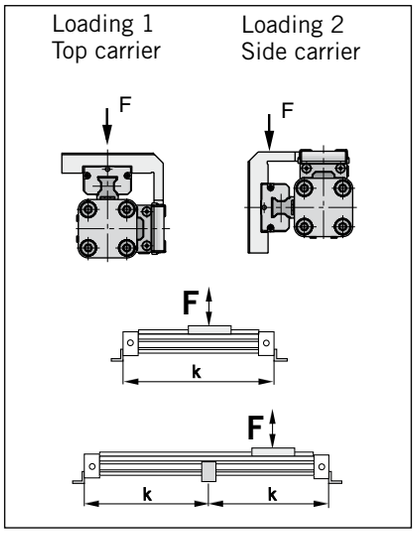

Note:
For speeds v > 0.5 m/s the distance between supports should not exceed 1 m.

The right to introduce technical modifications is reserved

Variable Stop

The variable stop Type VS provides simple stroke limitation.
It can be retrofitted and positioned anywhere along the stroke length.
For every cylinder diameter two types of shock absorber are available – see „Shock Absorber Selection“ below.
Mid-section supports and magnetic switches can still be fitted on the same side as the variable stop.

Depending on the application, two variable stops can be fitted if required.

Variable Stop Type VS16 to VS50

Arrangement with two variable stops

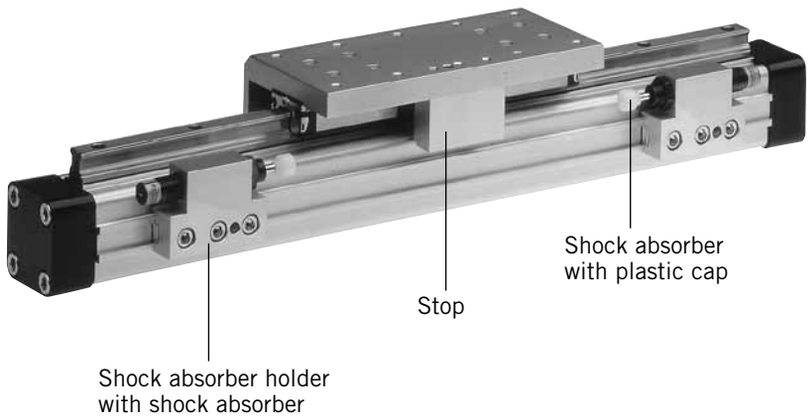

Shock Absorber Selection

The shock absorber is selected in dependence on the mass and speed.

The mass of the carrier itself must be taken into account.

Shock Absorber Selection in Dependence on Mass and Speed for Series OSP-STL16

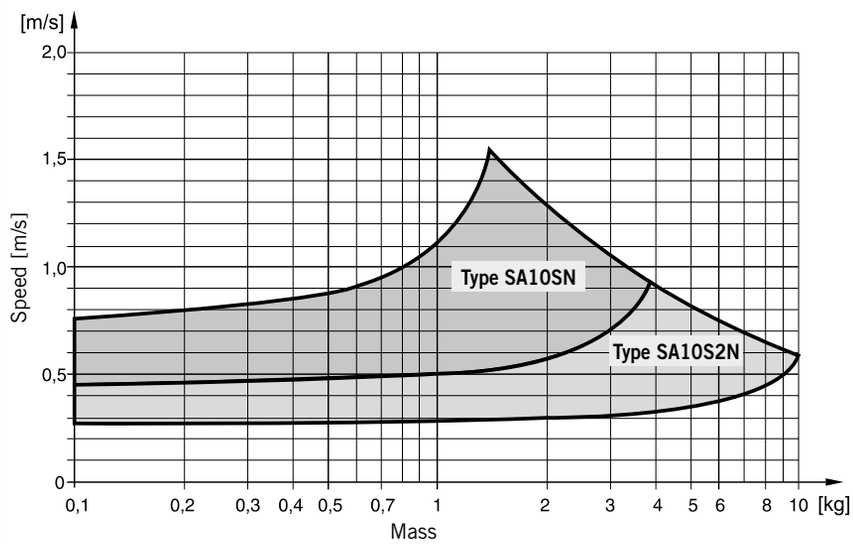

The values relate to an effective driving force of 78 N (6 bar)

Shock Absorber Selection in Dependence on Mass and Speed for Series OSP-STL25

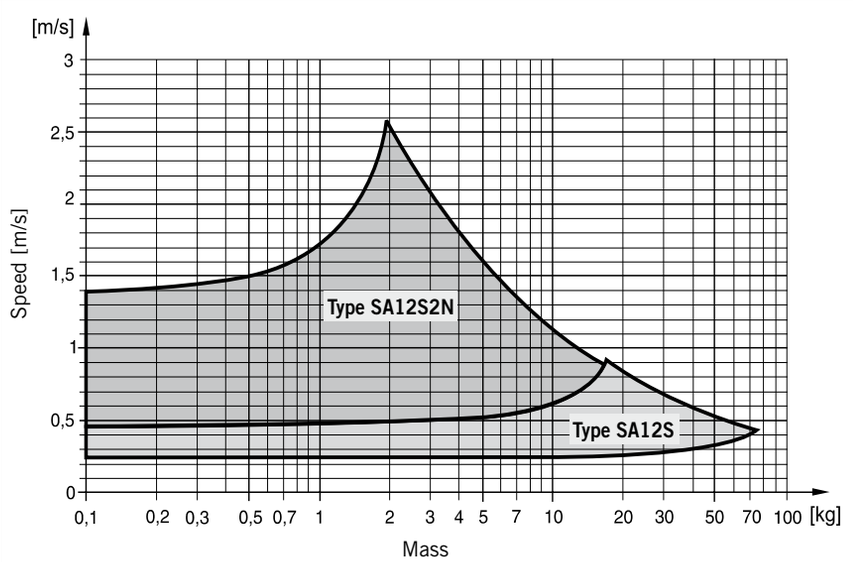

The values relate to an effective driving force of 250 N (6 bar)

Shock Absorber Selection in Dependence on Mass and Speed for Series OSP-STL32

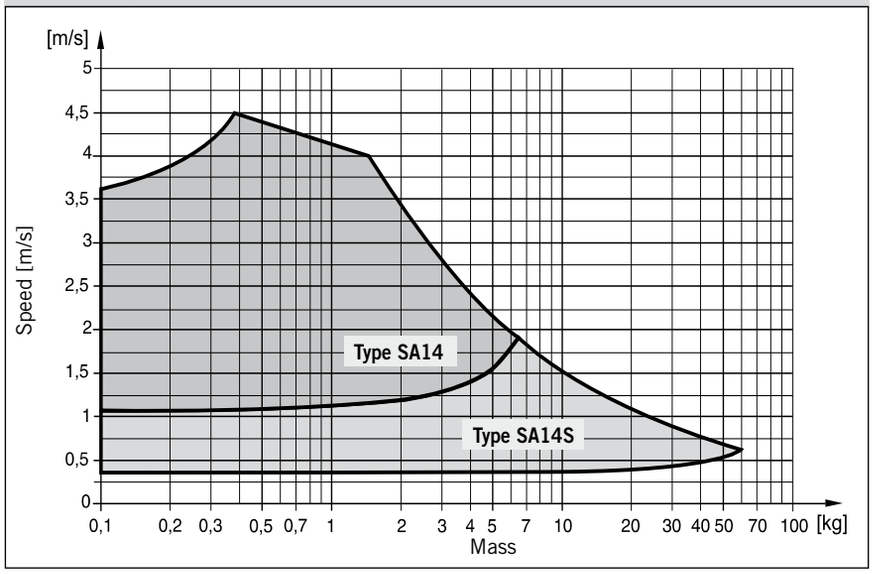

The values relate to an effective driving force of 420 N (6 bar)

Shock Absorber Selection in Dependence on Mass and Speed for Series OSP-STL40

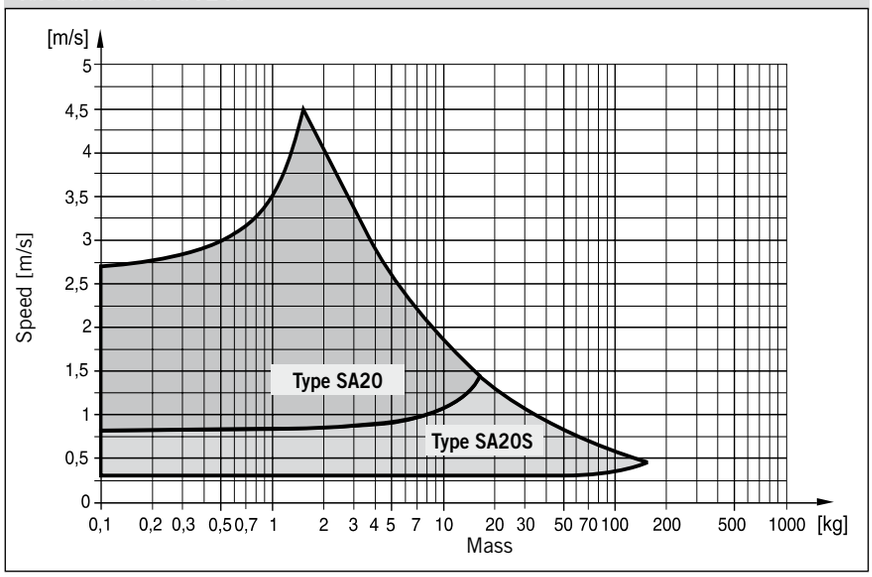

The values relate to an effective driving force of 640 N (6 bar)

Shock Absorber Selection in Dependence on Mass and Speed for Series OSP-STL50

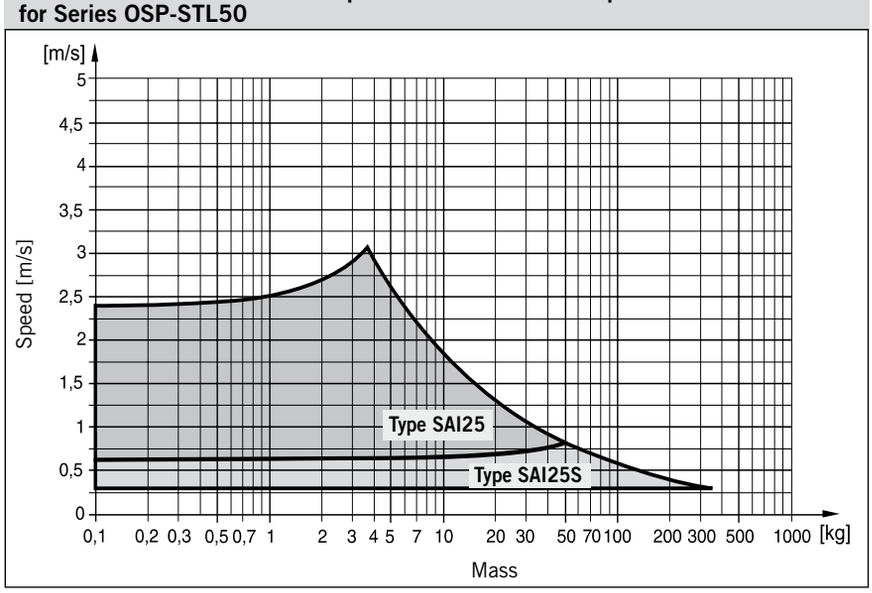

The values relate to an effective driving force of 1000 N (6 bar)

The right to introduce technical modifications is reserved

Dimensions – Variable Stop Type VS16 to VS50

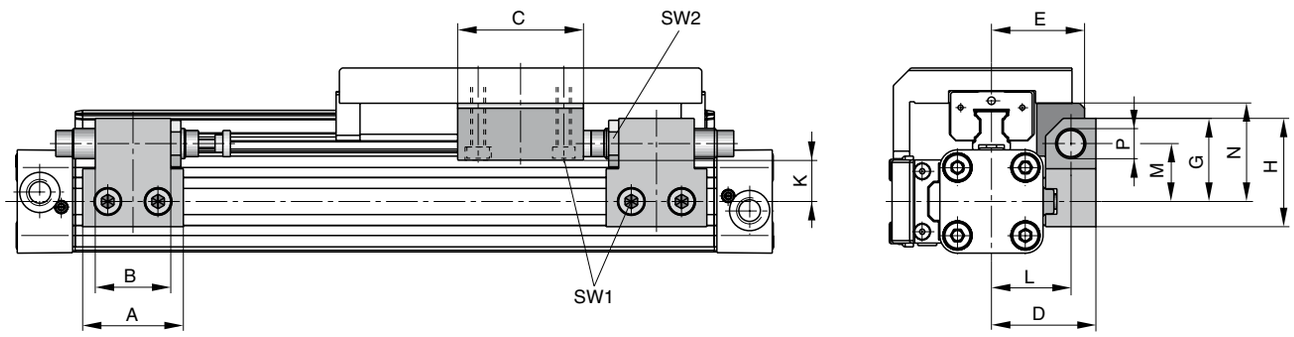

Dimension Table [mm] – Variable Stop Type VS16 to VS50

Series	Type	A	B	C	D	E	G	H	K	L	M	N	P	SW1	SW2
OSP-STL16	**VS16**	30	14	25	33	30	28	38	16.2	25.5	20.5	30	M10x1	4	12.5
OSP-STL25	**VS25**	40	30	50	41.5	37	33	43	18	31.5	23	39	M12x1	5	16
OSP-STL32	**VS32**	60	40	50	45.5	42	35	45	19	35.5	25	48	M14x1.5	5	17
OSP-STL40	**VS40**	84	52	60	64	59	48	63	25.6	50	34	58.6	M20x1.5	5	24
OSP-STL50	**VS50**	84	-	60	75	69	55	70	26.9	57	38	66.9	M25x1.5	5	30

Order Information – Variable Stop Type VS16 to VS50

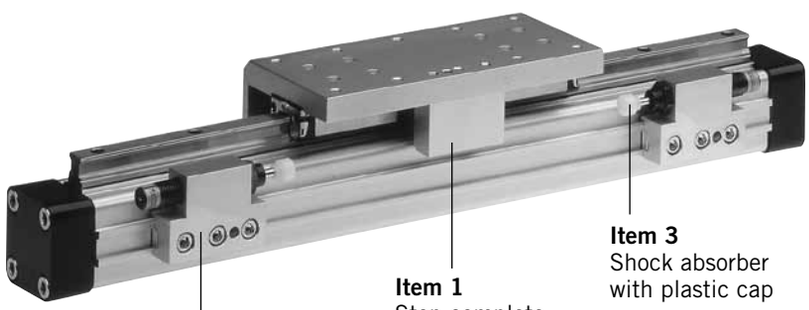

Item 3
Shock absorber
with plastic cap

Item 1
Stop complete
with fittings

Item 2
Shock absorber holder
complete with fittings
– without shock absorber

Order Instructions – Variable Stop Type VS16 to VS50 — without cylinder and without guide

Item	Description	Size VS16		VS25		VS32		VS40		VS50	
		Type	Order No.	Type	Order No.	Type	Order No.	Type	Order No.	Type	Order No.
1	Stop, complete	-	21196FIL	-	21197FIL	-	21198FIL	-	21199FIL	-	21200FIL
2	Shock absorber holder complete	-	21201FIL	-	21202FIL	-	21203FIL	-	21204FIL	-	21205FIL
3*	Shock absorber, soft	SA10SN	7718FIL	SA12S2N	7723FIL	SA14	7708FIL	SA20	7710FIL	SAI25	7712FIL
	Shock absorber, hard	SA10S2N	7721FIL	SA12S	7707FIL	SA14S	7709FIL	SA20S	7711FIL	SAI25S	7713FIL

* Shock absorber with plastic cap

Note: Order instructions for VS in combination with the cylinder and guide see page 69, pos. 18

Order Instructions – STARLINE

1-4	5+6	7	8	9	10	11	12-16	17	18	19	20	21	22	23	24	25
OSPP	25	0	0	0	0	0	01100	0	0	0	0	0	0	**0**	**0**	0

Piston-Ø
16
25
32
40
50

Stroke
Input in mm (5 digits)

Piston Mounting	
0	without

Measuring system	
0	without
X	SFI 0.1 mm
Y	SFI 1 mm

Screws	
0	standard

Cushioning	
0	standard
1	max. length [3]
2	VS variable stop, soft left for Starline
3	VS variable stop, hard, left for Starline
4	VS variable stop, soft, right for Starline
5	VS variable stop, hard, right for Starline
6	VS variable stop, soft, both sides for Starline
7	VS variable stop, hard, both sides for Starline

Version / Piston	
0	standard
1	Tandem

Lubrication	
0	standard
1	Slow speed [2] [3]

Cover / Cable Channel	
0	standard
1	cable channel
2	cable channel two-sided
X	without Cover rail

Air Connection	
0	standard
1	on the end face
2	both at one end (not turnable)
3	left standard right end face
4	right standard left end face
A	3/2 way valve VOE 24 V = Ø 25,32,40, 50
B	3/2 way valve VOE 230 V~/110 V= Ø 25,32,40,50
C	3/2 way valve VOE 48 V= Ø 25,32,40,50
E	3/2 way valve VOE 110 V~ Ø 25,32,40,50

Seals	
0	standard (NBR)
1	Viton® [1]

End cap position	
0	l+r 0° = in front
1	l+r 90° = underneath
2	l+r 180° = at the back
3	l+r 270° = same side as outerband
4	l 90° = underneath; r 0° = in front
5	l 180° = at the back; r 0° = in front
6	l 270° = same side as outerband; r 0° = in front
7	l 0° = in front; r 90° = underneath
8	l 180° = at the back; r 90° = underneath
9	l 270° = same side as outerband; r 90° = underneath
A	l 0° = in front; r 180° = at the back
B	l 90° = underneath; r 180° = at the back
C	l 270° = same side as outerband; r 180° = at the back
D	l 0° = in front; r 270° = same side as outerband
E	l 90° = underneath; r 270° = same side as outerband
F	l 180° = at the back; r 270° = same side as outerband

Guides/ Brakes/ Inversion	
0	without
B	Starline STL

add. Guide Carriage	
0	without
B	Guide Carriage Starline STL

End cap position (air connection)

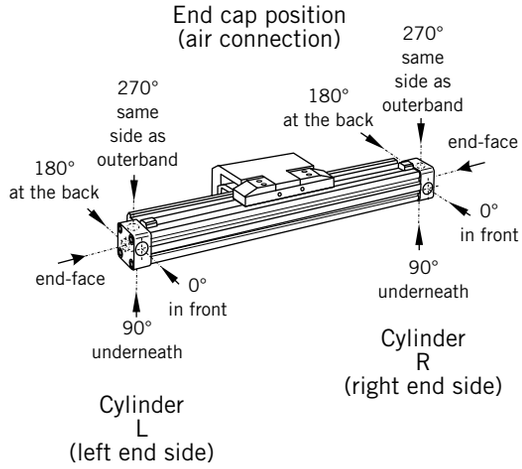

[1] Viton with VOE not possible.

[2] "Slow speed lubrication" in combination with „Viton®" seals on demand.

[3] „Lubrication slow speed" in combination with „max. cushioning length" not possible.

The right to introduce technical modifications is reserved

Recirculating Ball Bearing Guide KF

OSP
ORIGA SYSTEM PLUS

Series KF16 to KF50
For Linear Drives
Series OSP-P CLASSIC

Versions

for Pneumatic Linear Drive:
Series OSP-P KF

Loads, Forces and Moments

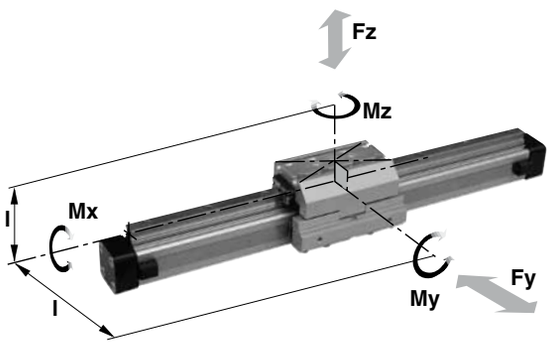

Features:

- Anodized aluminium guide carriage, the mounting dimensions correspond to FESTO Type: DGPL-KF
- Polished and hardened steel guide rail
- For high loads in all directions
- High precision
- Integrated wiper system
- Integrated grease nipples
- Any length of stroke up to 3700 mm
- Maximum speed
  KF16, KF40: v = 3 m/s
  KF25, KF32, KF50: v = 5 m/s

Technical Data

The table shows the maximum permissible loads. If multiple moments and forces act upon the cylinder simultaneously, the following equation applies:

$$\frac{Mx}{Mx_{max}} + \frac{My}{My_{max}} + \frac{Mz}{Mz_{max}} + \frac{Fy}{Fy_{max}} + \frac{Fz}{Fz_{max}} \leq 1$$

The sum of the loads should not exceed >1

The table shows the maximum permissible values for light, shock-free operation, which must not be exceeded even under dynamic conditions.

*** Please note:**
the mass of the carriage has to be added to the total moving mass when using the cushioning diagram.

Series	For linear drive	Max. moment [Nm]			Max. loads [N]		Mass of linear drive with guide [kg]		Mass * guide carriage [kg]	Groove stone	Order-No.	
		Mx	My	Mz	Fy	Fz	with 0 mm stroke	increase per 100 mm stroke		Thread size	Groove Stone	Guide KF without cylinder **
KF16	OSP-P16	12	25	25	1000	1000	0.558	0.21	0.228	-	**-**	**21101**
KF25	OSP-P25	35	90	90	3100	3100	1.522	0.369	0.607	M5	**13508FIL**	**21102**
KF32	OSP-P32	44	133	133	3100	3100	2.673	0.526	0.896	M5	**13508FIL**	**21103**
KF40	OSP-P40	119	346	346	4000	7100	4.167	0.701	1.531	M6	**13509FIL**	**21104**
KF50	OSP-P50	170	480	480	4000	7500	7.328	0.936	2.760	M8	**13510FIL**	**21105**

** Please use this order pattern: Order-No. + „stroke in mm“ (5 digits)
Example: KF guide D16 mm, stroke 1000 mm: 21101-01000

For **linaer drives** see page 9-13
For **mountings** see page 107-115

The right to introduce technical modifications is reserved

Dimensions Series OSP-P KF16 to KF50

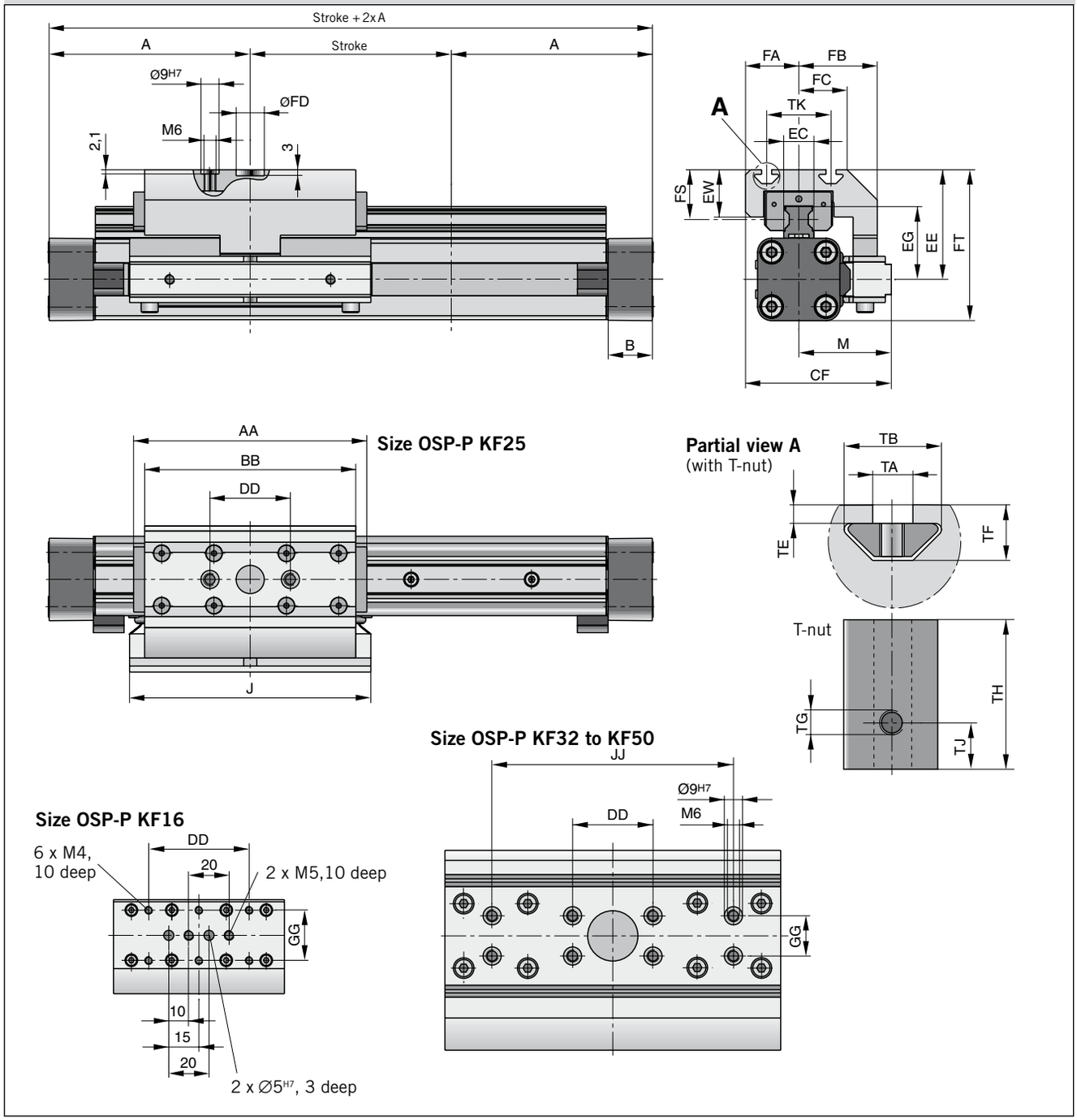

Dimension Table [mm] Series OSP-P KF16, KF25, KF32, KF40, KF50

Series	A	B	J	AA	BB	CF	DD	EC	EE	EG	EW	JJ	GG	M
KF16	65	14	76	93	85	48	50	15	41	24.6	10	–	25	30
KF25	100	22	120	120.2	105	72.5	40	15	54.5	36.2	23.5	–	–	46
KF32	125	25.5	160	146.2	131	93.8	40	15	60.5	42.2	23.5	–	20	59.8
KF40	150	28	150	188.5	167	103.3	40	20	69.5	51.6	26.5	120	20	60.8
KF50	175	33	180	220.2	202	121	40	23	90.5	62.3	32.5	120	40	69

Series	FA	FB	FC	FD	FT	FS	TA	TB	TE	TF	TG	TH	TJ	TK
KF16	17.7	29	16.5	–	56	19	–	–	–	–	–	–	–	–
KF25	26.5	39	24	14 G7	75	24.7	5	12.1	2.3	6.9	M5	11.5	4	32
KF32	34	53.8	34	25 G7	86.5	24.7	5	12.1	1.8	6.4	M5	11.5	4	47
KF40	42.5	56.8	41	25 G7	104	26	6	12.8	1.8	8.4	M6	17	5.5	55
KF50	52	65	50	25 G7	134	38	8	21.1	4.5	12.5	M8	23	7.5	72

Permissible Unsupported Length OSP-P KF16 to KF50

Loading 1 – Top carrier

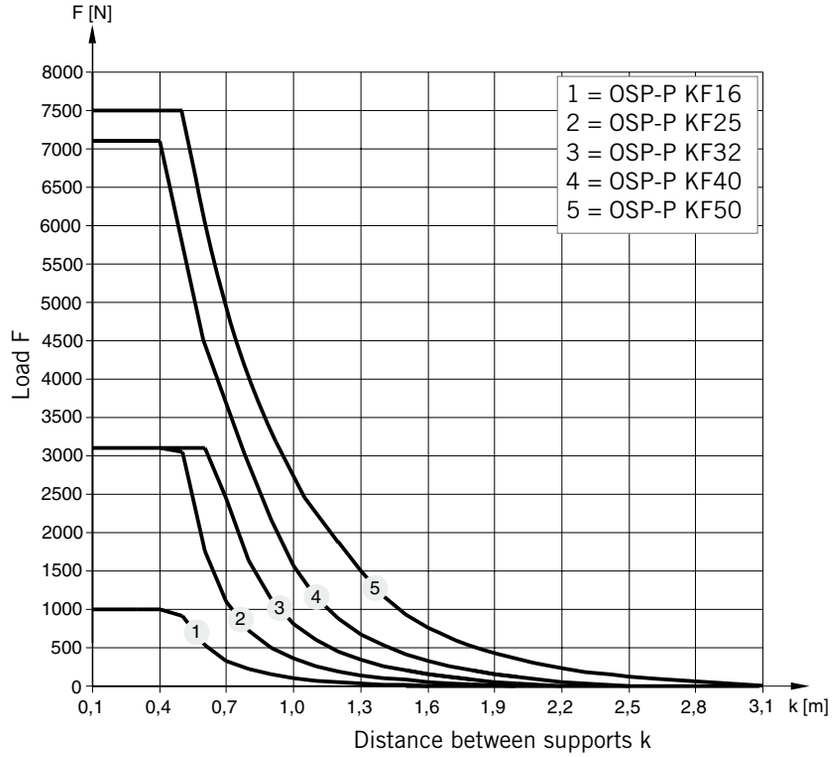

Permissible Unsupported Length OSP-P KF16 to KF50

Loading 2 – Side carrier

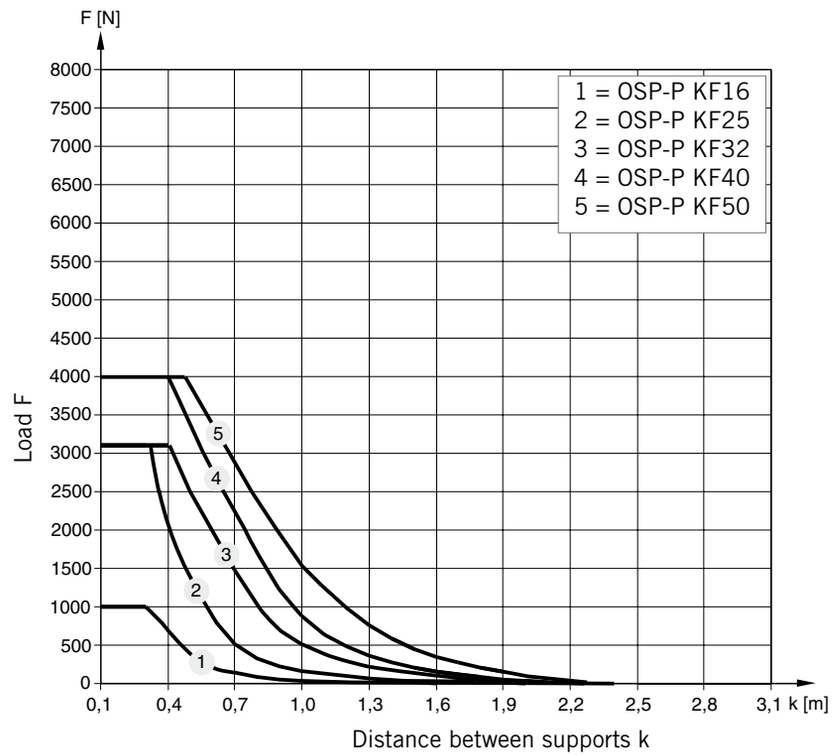

Mid-Section Support

(For versions, see page 111, 114-115)
Mid-section supports are required from a certain stroke length to prevent excessive deflection and vibration of the linear drive. The diagrams show the maximum permissible unsupported length in relation to loading. A distinction must be drawn between loading 1 and loading 2.
Deflection of 0.5 mm max. between supports is permissible.

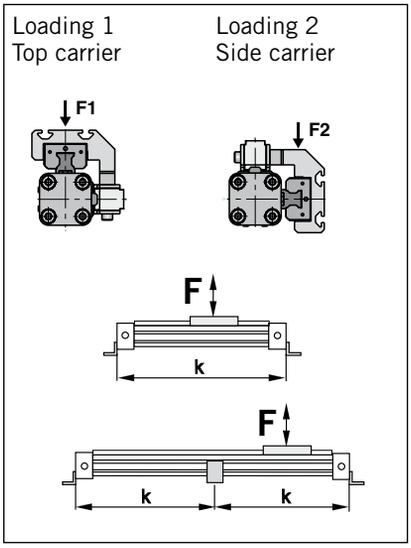

Note:

For speeds v > 0.5 m/s the distance between supports should not exceed 1 m.

The right to introduce technical modifications is reserved

Variable Stop

The variable stop Type VS provides simple stroke limitation.
It can be retrofitted and positioned anywhere along the stroke length.
For every cylinder diameter two types of shock absorber are available – see „Shock Absorber Selection“ below.
Mid-section supports and magnetic switches can still be fitted on the same side as the variable stop.

Depending on the application, two variable stops can be fitted if required.

Variable Stop Type VS16 to VS50

Arrangement with two variable stops

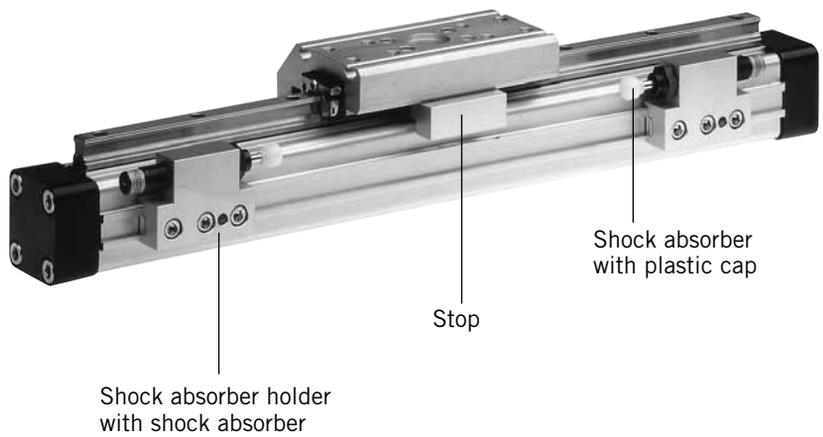

Shock Absorber Selection

The shock absorber is selected in dependence on the mass and speed.

The mass of the carrier itself must be taken into account.

Shock Absorber Selection in Dependence on Mass and Speed for Series OSP-KF16

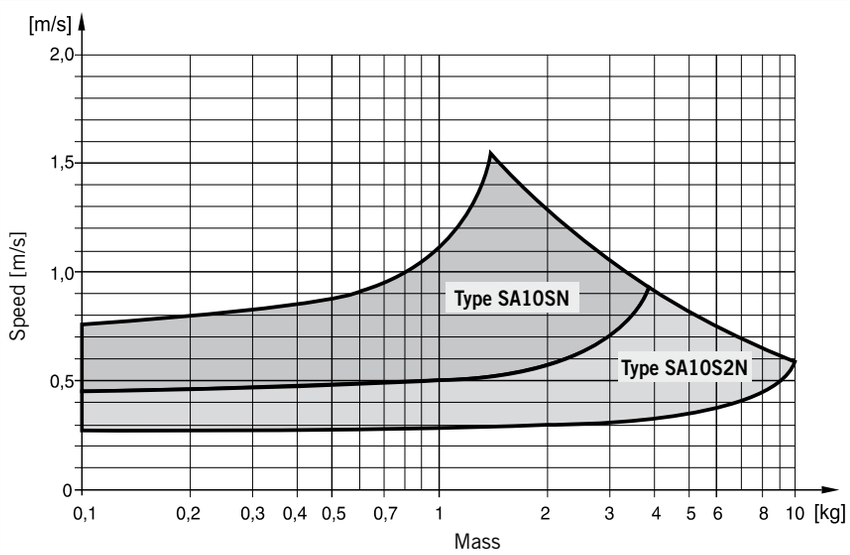

The values relate to an effective driving force of 78 N (6 bar)

Shock Absorber Selection in Dependence on Mass and Speed for Series OSP-KF25

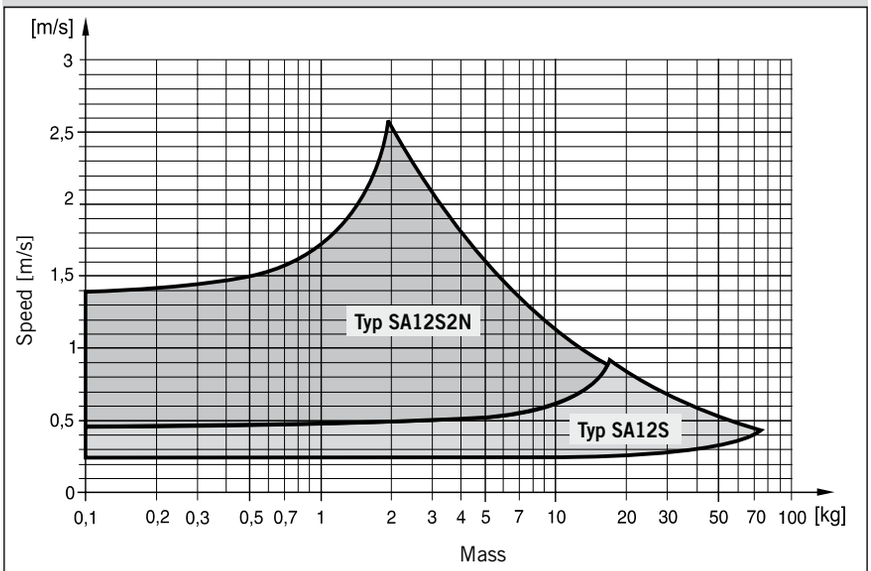

The values relate to an effective driving force of 250 N (6 bar)

Shock Absorber Selection in Dependence on Mass and Speed for Series OSP-KF32

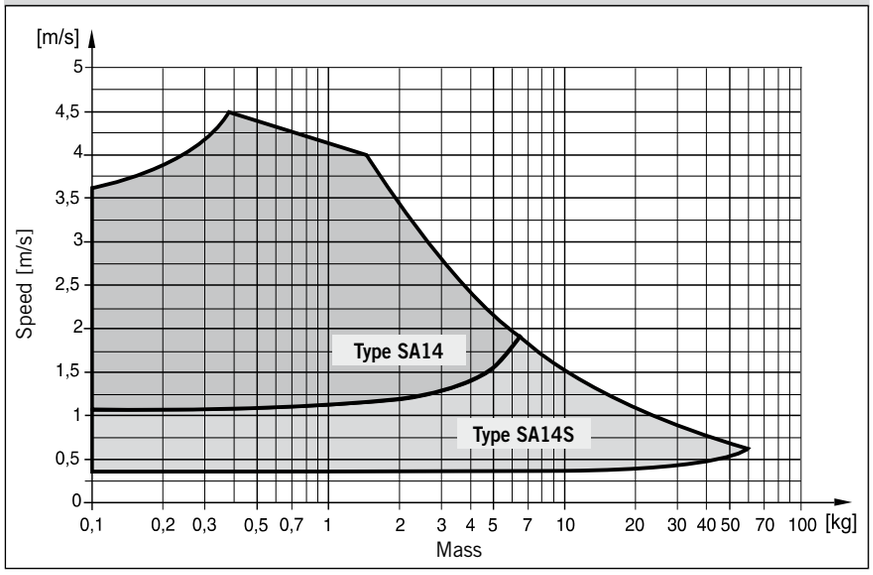

The values relate to an effective driving force of 420 N (6 bar)

Shock Absorber Selection in Dependence on Mass and Speed for Series OSP-KF40

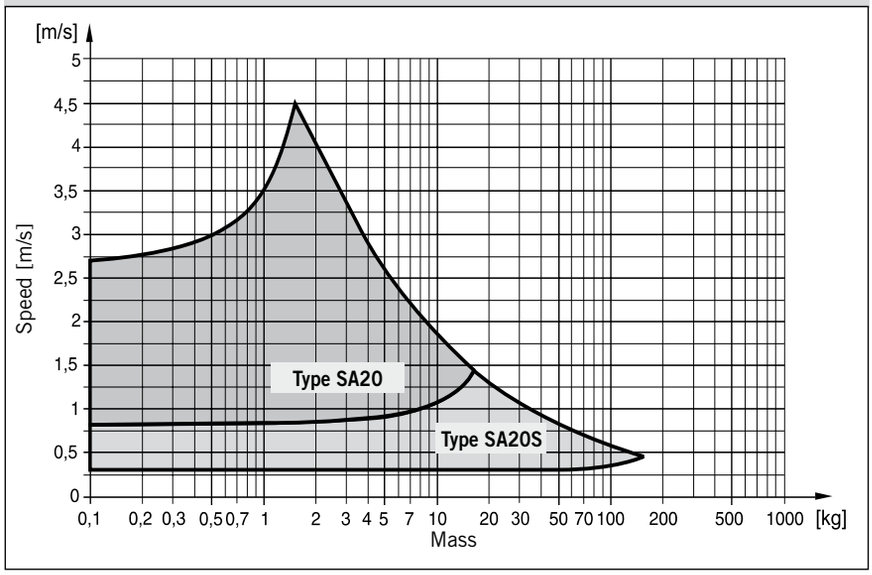

The values relate to an effective driving force of 640 N (6 bar)

Shock Absorber Selection in Dependence on Mass and Speed for Series OSP-KF50

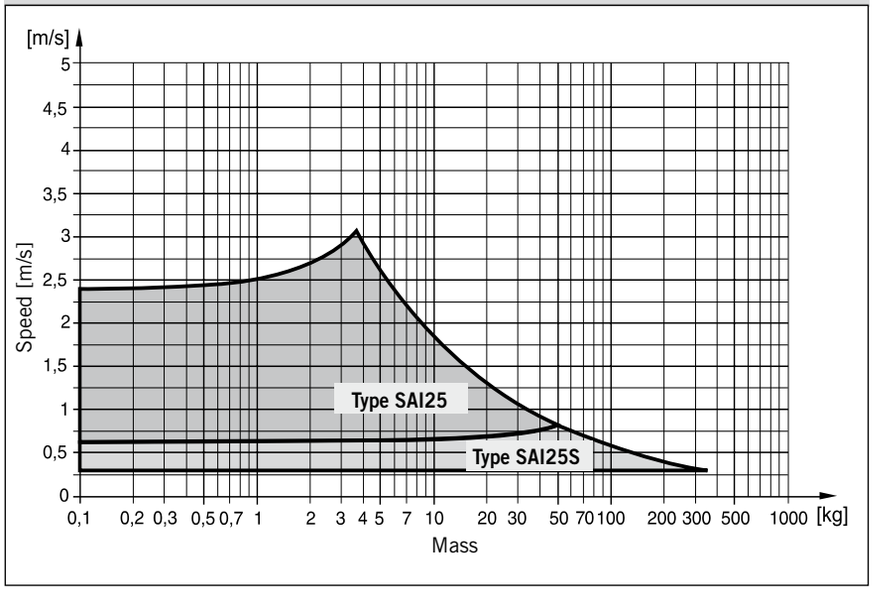

The values relate to an effective driving force of 1000 N (6 bar)

The right to introduce technical modifications is reserved

Dimensions – Variable Stop Type VS16 to VS50

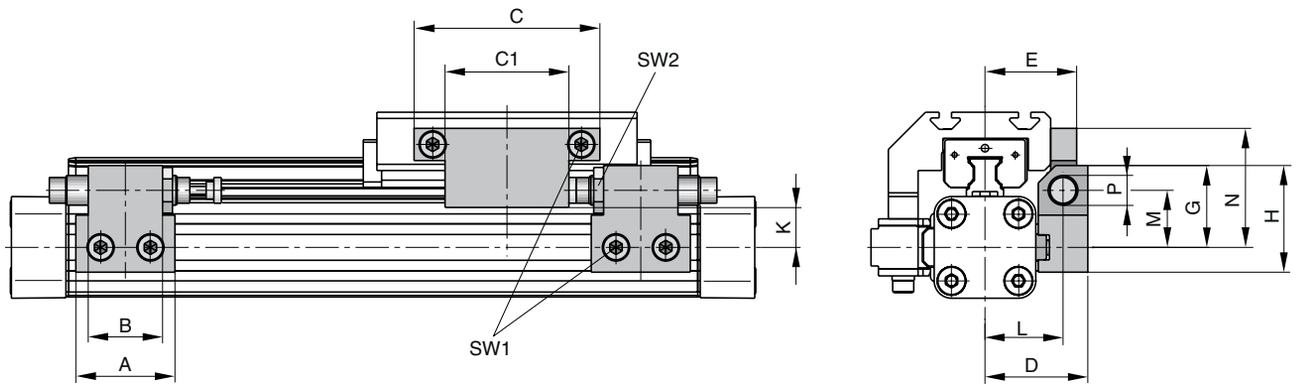

Dimension Table [mm] – Variable Stop Type VS16 to VS50

Series	Type	A	B	C	C1	D	E	G	H	K	L	M	N	P	SW1	SW2
OSP-KF16	**VS16**	30	14	50	25	33	29.7	28	38	16.2	25.5	20.5	40.5	M10 x 1	4	12.5
OSP-KF25	**VS25**	40	30	75	50	41.5	37	33	43	18	31.5	23	48	M12 x 1	5	16
OSP-KF32	**VS32**	60	40	50	-	45.5	41.5	35	45	19	35.5	25	37	M14 x 1.5	5	17
OSP-KF40	**VS40**	84	52	60	-	64	59	48	63	25.5	50	34	43	M20 x 1.5	5	24
OSP-KF50	**VS50**	84	-	60	-	75	69	55	70	26.9	57	38	58	M25 x 1.5	5	30

Order Information – Variable Stop Type VS16 to VS50

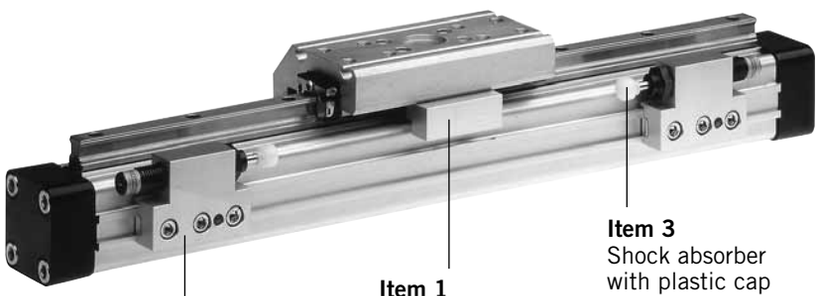

Item 3
Shock absorber
with plastic cap

Item 1
Stop complete
with fittings

Item 2
Shock absorber holder
complete with fittings
– without shock absorber

Order Instructions – Variable Stop Type VS16 to VS50

without cylinder and without guide

Item	Description	Size									
		VS16		**VS25**		**VS32**		**VS40**		**VS50**	
		Type	**Order No.**	**Type**	**Order No.**	**Type**	**Order No.**	**Type**	**Order No.**	**Type**	**Order No.**
1	Stop, complete	-	**21186FIL**	-	**21187FIL**	-	**21188FIL**	-	**21189FIL**	-	**21190FIL**
2	Shock absorber holder, complete	-	**21201FIL**	-	**21202FIL**	-	**21203FIL**	-	**21204FIL**	-	**21205FIL**
3*	Shock absorber, soft	**SA10SN**	**7718FIL**	**SA12S2N**	**7723FIL**	**SA14**	**7708FIL**	**SA20**	**7710FIL**	**SAI25**	**7712FIL**
	Shock absorber, hard	**SA10S2N**	**7721FIL**	**SA12S**	**7707FIL**	**SA14S**	**7709FIL**	**SA20S**	**7711FIL**	**SAI25S**	**7713FIL**

* Shock absorber with plastic cap

Note: Order instructions for VS in combination with the cylinder and guide see page 77, pos. 18

Order Instructions – KF

1-4	5+6	7	8	9	10	11	12-16	17	18	19	20	21	22	23	24	25
OSPP	25	0	0	0	0	0	01100	0	0	0	0	0	0	**0**	**0**	0

Piston-Ø
16
25
32
40
50

Version / Piston	
C	Classic
T	Classic Tandem

Air Connection	
0	standard
1	on the end face
2	both at one end (not turnable)
3	left standard right end face
4	right standard left end face
A	3/2 way valve VOE 24 V= Ø 25,32,40, 50
B	3/2 way valve VOE 230 V~/110 V= Ø 25,32,40,50
C	3/2 way valve VOE 48 V= Ø 25,32,40,50
E	3/2 way valve VOE 110 V~ Ø 25,32,40,50

Seals	
0	standard (NBR)
1	Viton® [1]

Lubrication	
0	standard
1	Slow speed [2] [3]

Screws	
0	standard

Stroke
Input in mm (5 digits)

End cap position	
0	l+r 0° = in front
1	l+r 90° = underneath
2	l+r 180° = at the back
3	l+r 270° = same side as outerband
4	l 90° = underneath; r 0° = in front
5	l 180° = at the back; r 0° = in front
6	l 270° = same side as outerband; r 0° = in front
7	l 0° = in front; r 90° = underneath
8	l 180° = at the back; r 90° = underneath
9	l 270° = same side as outerband; r 90° = underneath
A	l 0° = in front; r 180° = at the back
B	l 90° = underneath; r 180° = at the back
C	l 270° = same side as outerband; r 180° = at the back
D	l 0° = in front; r 270° = same side as outerband
E	l 90° = underneath; r 270° = same side as outerband
F	l 180° = at the back; r 270° = same side as outerband

Cushioning	
0	standard
1	max. length [3]
2	VS variable stop, soft left for KF
3	VS variable stop, hard, left for KF
4	VS variable stop, soft, right for KF
5	VS variable stop, hard, right for KF
6	VS variable stop, soft, both sides for KF
7	VS variable stop, hard, both sides for KF

Piston Mounting	
0	without

Guides/ Brakes/ Inversion	
0	without
C	KF

add. Guide Carriage	
0	without
C	Guide Carriage KF

Measuring system	
0	without
X	SFI 0.1 mm
Y	SFI 1 mm

Cover / Cable Channel	
0	standard
1	cable channel
2	cable channel two-sided
X	without Cover rail

End cap position (air connection)

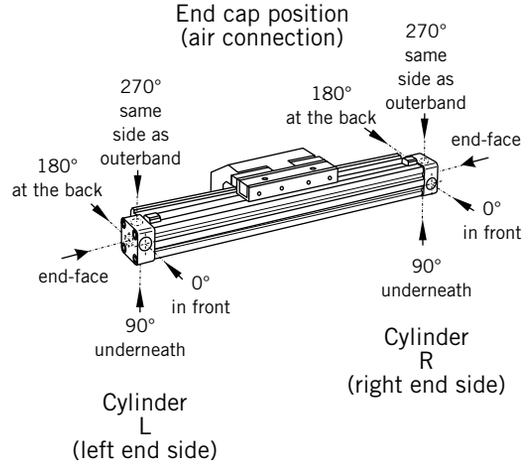

[1] Viton with VOE not possible.

[2] "Slow speed lubrication" in combination with „Viton®" seals on demand.

[3] „Lubrication slow speed" in combination with „max. cushioning length" not possible.

The right to introduce technical modifications is reserved

Heavy Duty-Guide HD

OSP
ORIGA SYSTEM PLUS

Series HD 25 to 50
for Linear Drive Series OSP-P

Version with pneumatic linear drive series OSP-P

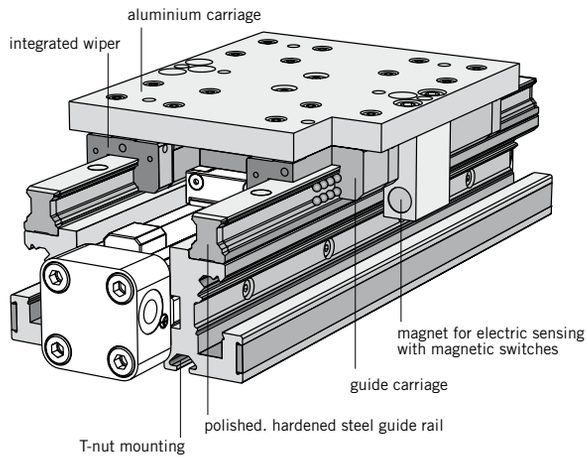

Loads. Forces and Moments

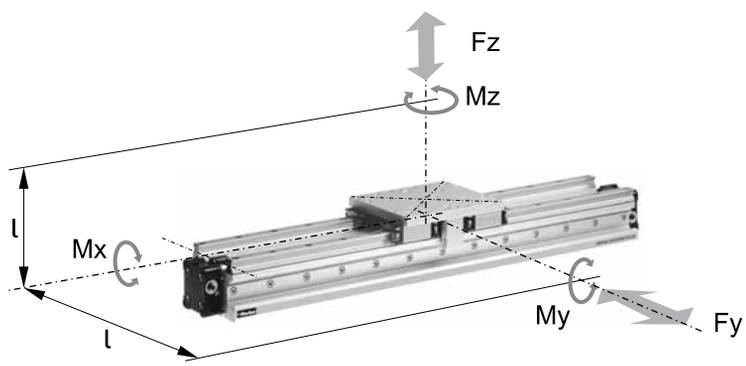

Features:

- Guide system: 4-row recirculating ball bearing guide
- Polished and hardened steel guide rail
- For highest loads in all directions
- Highest precision
- Integrated wiper system
- Integrated grease nipples
- Any lengths of stroke up to 3700 mm (longer strokes on request)
- Anodized aluminium guide carriage - dimensions compatible with OSP guide GUIDELINE
- Maximum speed v = 5 m/s

Options:

- With variable stop
- With intermediate stop module

Technical Data

The table shows the maximum permissible loads. If multiple moments and forces act upon the cylinder simultaneously, the following equation applies:

$$\frac{Mx}{Mx_{max}} + \frac{My}{My_{max}} + \frac{Mz}{Mz_{max}} + \frac{Fy}{Fy_{max}} + \frac{Fz}{Fz_{max}} \leq 1$$

The sum of the loads should not >1

The table shows the maximum permissible values for light, shock-free operation. which must not be exeeded even under dynamic conditions.

* **Please note:**
The mass of the carriage does not have to be added to the total moving mass when using the cushioning diagram.

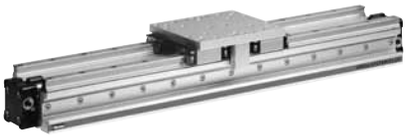

Series	For linear drive	Max. moment [Nm]			Max. loads [N]		Mass of linear drive with guide carriage [kg]		Mass * guide [kg]	Order-No. ** HD Guide without cylinder
		Mx	My	Mz	Fy	Fz	with 0 mm stroke	increase per 100 mm stroke		
HD 25	OSP-P25	260	320	320	6000	6000	3.065	0.924	1.289	**21246**
HD 32	OSP-P32	285	475	475	6000	6000	4.308	1.112	1.367	**21247**
HD 40	OSP-P40	800	1100	1100	15000	15000	7.901	1.748	2.712	**21248**
HD 50	OSP-P50	1100	1400	1400	18000	18000	11.648	2.180	3.551	**21249**

** Please use this order pattern: Order-No. + „stroke in mm“ (5 digits)
Example: HD Guide D25 mm, stroke 1000 mm: 21246-01000

For **linear drives** see page 9-13

The right to introduce technical modifications is reserved

Dimensions

Series OSP-P

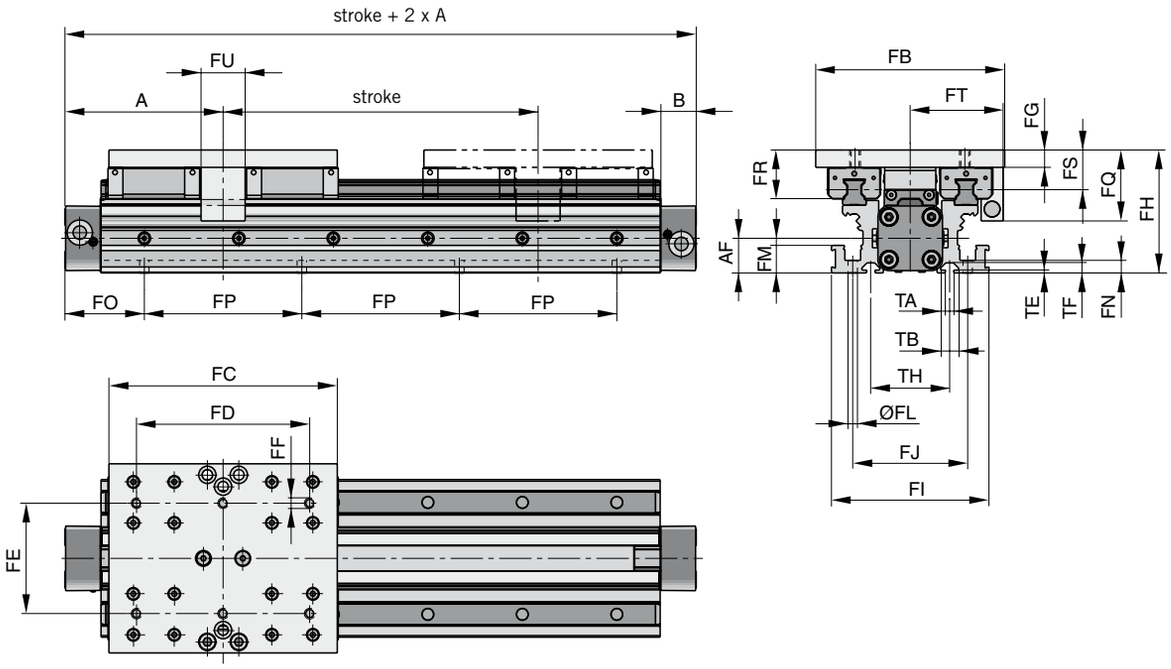

Note:

The HD heavy duty guide must be mounted on a flat surface for its entire length.

If T-grooves or T-bolts are used, the distance between them should not exeed 100 mm.

Variable Stop
Type VS25 to VS50

The variable stop provides simple stroke limitation and can be supplied mounted on the right or left, as required.

For further information see following data sheets:

For dimensions and order instructions see page 82

For shock absorber selection see page 66, 67

Incremental displacement measuring system
ORIGA-Sensoflex
Series SFI-plus

can be supplied mounted on the right or left, as required.

For further information see page 135-139

Arrangement of magnetic switches:

Magnetic switches can be fitted anywhere on either side.

For further information see following data sheets:

Magnetic Switches see page 123-130

Cable Cover see page 126

Linear Drives OSP-P see from page 15

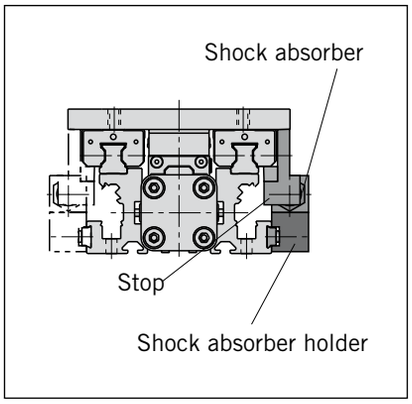

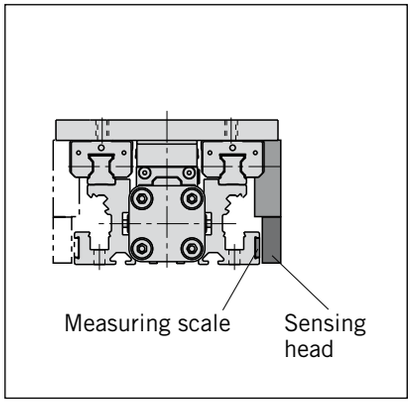

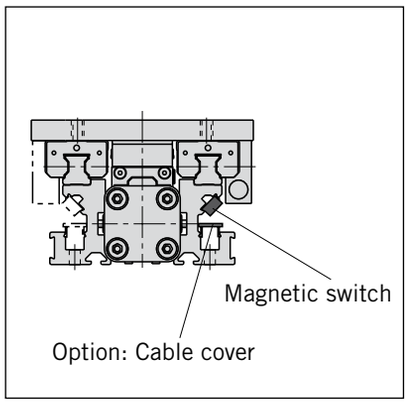

Dimension Table [mm]

Series	A	B	AF	FB	FC	FD	FE	FF	FG	FH	FI	FJ	ØFL
HD25	100	22	22	120	145	110	70	M6	11	78	100	73	6
HD32	125	25.5	30	120	170	140	80	M6	11	86	112	85	6
HD40	150	28	38	160	180	140	110	M8	14	108	132	104	7.5
HD50	175	33	48	180	200	160	120	M8	14	118	150	118	7.5

Series	FM	FN	FP	FQ	FR	FS	FT	FU	TA	TB	TE	TF	TH
HD25	17.5	8	100	45	31	25	59	28	5.2	11.5	1.8	6.4	50
HD32	17.5	8	100	45	31	25	63	30	5.2	11.5	1.8	6.4	60
HD40	22	10	100	58	40	31.5	76	30	8.2	20	4.5	12.3	66
HD50	22	10	100	58	44	35.5	89	30	8.2	20	4.5	12.3	76

FO				
OSP-P				
x	HD25	HD32	HD40	HD50
00	50.0	75.0	50.0	75.0
01	50.5	75.5	50.5	75.5
02	51.0	76.0	51.0	76.0
03	51.5	76.5	51.5	76.5
04	52.0	77.0	52.0	77.0
05	52.5	77.5	52.5	77.5
06	53.0	78.0	53.0	78.0
07	53.5	78.5	53.5	78.5
08	54.0	79.0	54.0	79.0
09	54.5	79.5	54.5	79.5
10	55.0	80.0	55.0	80.0
11	55.5	80.5	55.5	80.5
12	56.0	81.0	56.0	81.0
13	56.5	81.5	56.5	81.5
14	57.0	82.0	57.0	82.0
15	57.5	82.5	57.5	82.5
16	58.0	83.0	58.0	83.0
17	58.5	83.5	58.5	83.5
18	59.0	84.0	59.0	84.0
19	59.5	84.5	59.5	84.5
20	60.0	85.0	60.0	85.0
21	60.5	85.5	60.5	85.5
22	61.0	36.0	61.0	86.0
23	61.5	36.5	61.5	86.5
24	62.0	37.0	62.0	87.0
25	62.5	37.5	62.5	87.5
26	63.0	38.0	63.0	88.0
27	63.5	38.5	63.5	88.5
28	64.0	39.0	64.0	89.0
29	64.5	39.5	64.5	89.5
30	65.0	40.0	65.0	90.0
31	65.5	40.5	65.5	90.5
32	66.0	41.0	66.0	91.0
33	66.5	41.5	66.5	91.5
34	67.0	42.0	67.0	92.0
35	67.5	42.5	67.5	92.5
36	68.0	43.0	68.0	93.0
37	68.5	43.5	68.5	43.5
38	69.0	44.0	69.0	44.0
39	69.5	44.5	69.5	44.5
40	70.0	45.0	70.0	45.0
41	70.5	45.5	70.5	45.5
42	71.0	46.0	71.0	46.0
43	71.5	46.5	71.5	46.5
44	72.0	47.0	72.0	47.0
45	72.5	47.5	72.5	47.5
46	73.0	48.0	73.0	48.0
47	73.5	48.5	73.5	48.5
48	74.0	49.0	74.0	49.0
49	74.5	49.5	74.5	49.5

FO				
OSP-P				
x	HD25	HD32	HD40	HD50
50	75.0	50.0	75.0	50.0
51	75.5	50.5	75.5	50.5
52	76.0	51.0	76.0	51.0
53	76.5	51.5	76.5	51.5
54	77.0	52.0	77.0	52.0
55	77.5	52.5	77.5	52.5
56	78.0	53.0	78.0	53.0
57	78.5	53.5	78.5	53.5
58	79.0	54.0	79.0	54.0
59	79.5	54.5	79.5	54.5
60	80.0	55.0	80.5	55.0
61	80.5	55.5	80.5	55.5
62	81.0	56.0	81.0	56.0
63	81.5	56.5	81.5	56.5
64	82.0	57.0	82.0	57.0
65	32.5	57.5	82.5	57.5
66	33.0	58.0	83.0	58.0
67	33.5	58.5	83.5	58.5
68	34.0	59.0	84.0	59.0
69	34.5	59.5	84.5	59.5
70	35.0	60.0	85.0	60.0
71	35.5	60.5	85.5	60.5
72	36.0	61.0	86.0	61.0
73	36.5	61.5	86.5	61.5
74	37.0	62.0	87.0	62.0
75	37.5	62.5	87.5	62.5
76	38.0	63.0	88.0	63.0
77	38.5	63.5	38.5	63.5
78	39.0	64.0	39.0	64.0
79	39.5	64.5	39.5	64.5
80	40.0	65.0	40.0	65.0
81	40.5	65.5	40.5	65.5
82	41.0	66.0	41.0	66.0
83	41.5	66.5	41.5	66.5
84	42.0	67.0	42.0	67.0
85	42.5	67.5	42.5	67.5
86	43.0	68.0	43.0	68.0
87	43.5	68.5	43.5	68.5
88	44.0	69.0	44.0	69.0
89	44.5	69.5	44.5	69.5
90	45.0	70.0	45.0	70.0
91	45.5	70.5	45.5	70.5
92	46.0	71.0	46.0	71.0
93	46.5	71.5	46.5	71.5
94	47.0	72.0	47.0	72.0
95	47.5	72.5	47.5	72.5
96	48.0	73.0	48.0	73.0
97	48.5	73.5	48.5	73.5
98	49.0	74.0	49.0	74.0
99	49.5	74.5	49.5	74.5

Note:

the dimension FO is derived from the last two digits of the stroke:

Example:

Stroke 15**25** **mm**

X

For a cylinder OSP-P25 the adjacent table indicates that for x = 25 mm:
FO = 62.5 mm

The right to introduce technical modifications is reserved

Dimensions – Variable Stop Type VS25 to VS50

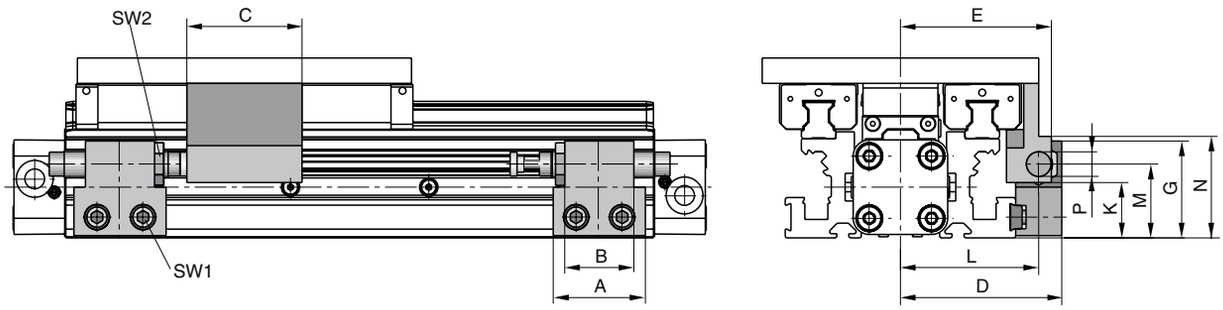

Dimension Table [mm] – Variable Stop Type VS25 to VS50

Series	Type	A	B	C	D	E	G	K	L	M	N	P	SW1	SW2
OSP-HD25	VS25	40	30	50	70	65.5	42	26	60	32	42	M12 x 1	5	16
OSP-HD32	VS32	60	40	54	73	71	44	28	63	34	53	M14 x 1.5	5	17
OSP-HD40	VS40	84	52	55	96	92	59	35	82	45	61	M20 x 1.5	5	24
OSP-HD50	VS50	84	-	60	107	105	66	37	89	49	66	M25 x 1.5	5	30

Order Information – Variable Stop Type VS25 to VS50

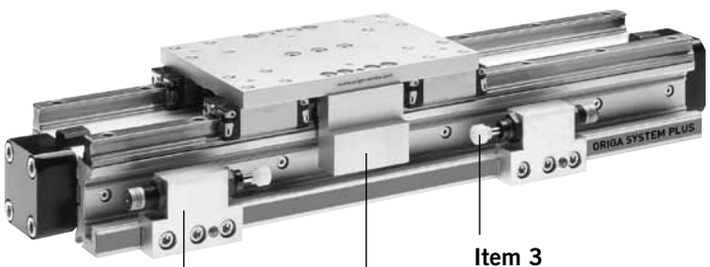

Item 3
Shock absorber
with plastic cap

Item 1
Stop complete
with fittings

Item 2
Shock absorber holder
complete with fittings
– without shock absorber

Shock Absorber Selection

For shock absorber selection in dependence on mass and speed see page 66, 67.

Order Instructions – Variable Stop Type VS25 to VS50 — without cylinder and HD-guide

Item	Description	Size							
		VS25		VS32		VS40		VS50	
		Type	Order-No.	Type	Order-No.	Type	Order-No.	Type	Order-No.
1	Stop, complete	-	21257FIL	-	21258FIL	-	21259FIL	-	21260FIL
2	Shock absorber holder, complete	-	21202FIL	-	21203FIL	-	21204FIL	-	21205FIL
3*	Shock absorber, soft	SA12S2N	7723FIL	SA14	7708FIL	SA20	7710FIL	SAI25	7712FIL
	Shock absorber, hard	SA12S	7707FIL	SA14S	7709FIL	SA20S	7711FIL	SAI25S	7713FIL

* Shock absorber with plastic cap (see page 66, 67)

Note: Order instructions for VS in combination with the HD Guide see page 86, pos. 18

Intermediate stop module

The intermediate stop module ZSM allows the guide carriage to stop at any desired intermediate positions with high accuracy. It can be retrofitted. Depending on the application, i.e. the number of intermediate stops, one or more intermediate position stops can be used. The intermediate position stops can be retracted and extended without the need for the guide carriage to be moved back out of position. Therefore the guide carriage can be made to stop at the defined intermediate positions in any order.

ORIGA intermediate stop module ZSM:

- Allows stopping at any intermediate positions
- Intermediate position stops can be located steplessly anywhere along the whole stroke length
- Movement to the next position without reverse stroke
- Compact unit
- Cost-effective positioning module without electrical or electronic components
- Option: end stop with fine adjustment

Intermediate stop module Type ZSM..HD

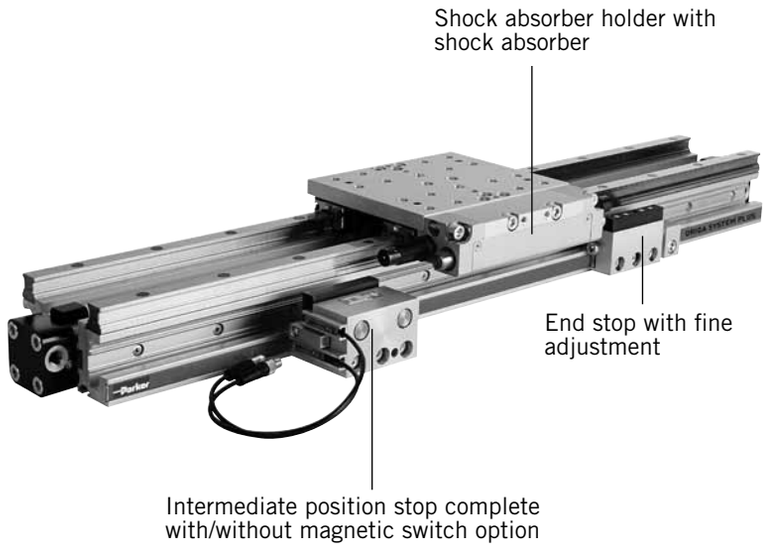

Technical data

Temperature range	-10°C to +70°C
Operating pressure range	4 – 8 bar
Intermediate position grid	85 mm

Shock Absorber Type SA14S

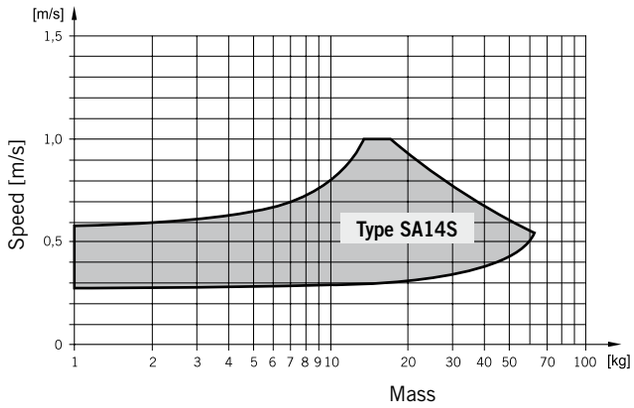

The values relate to an effective driving force of 250 N (6 bar)

The right to introduce technical modifications is reserved

Dimensions – intermediate stop module Type ZSM..HD

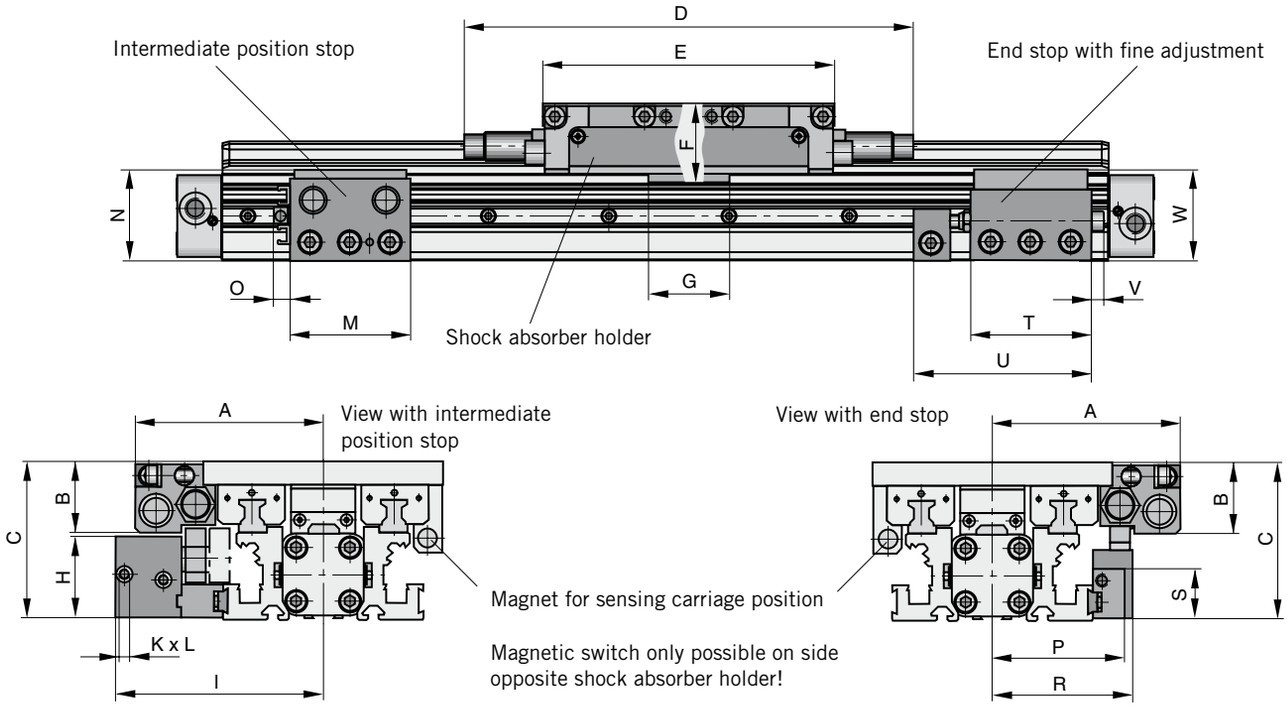

Dimension table [mm] – intermediate stop module Type ZSM..HD

Series	A	B	C	D	E	F	G	H	I	K	L	M	N	O	P	R	S	T	U	V	W
ZSM25	94	35	78	224	145	39	40	41	104	M5	5	60	45	8	66	70	26	60	93	6	46

Shock absorber arrangement in dependence on direction of movement

From right to left

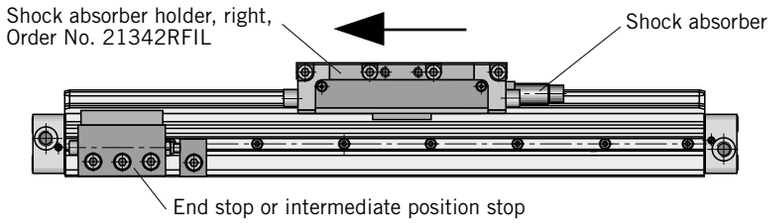

In both directions

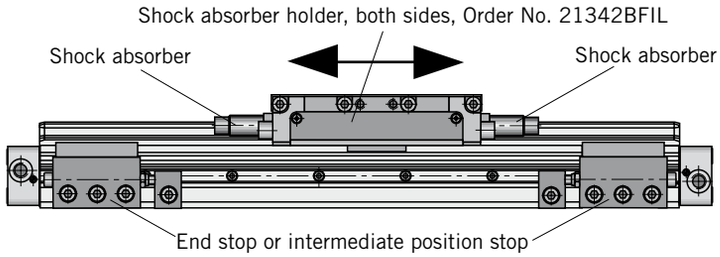

From left to right

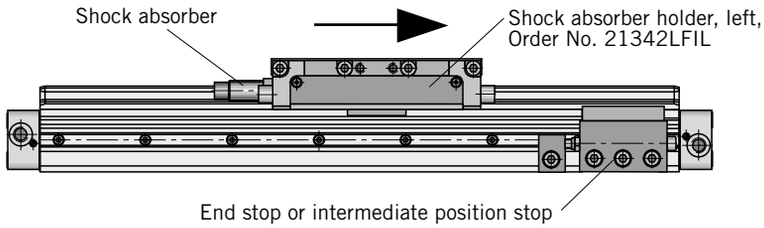

Order instructions – intermediate stop module Type ZSM..HD

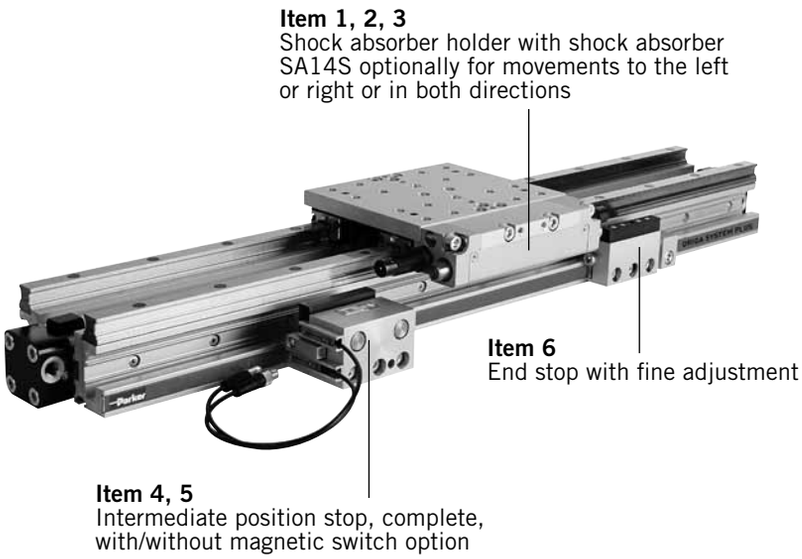

Illustration shows version with shock absorber holder for movement in both directions and magnetic switch option with T-slot switches (for magnetic switches Accessories see from page 123)

Order instructions – intermediate stop module Type ZSM..HD

Item	Description	For intermediate stop module	**Order-No.**
1*	Shock absorber holder with shock absorber SA14S, both sides	ZSM25HD	**21342BFIL**
2*	Shock absorber holder with shock absorber SA14S, left	ZSM25HD	**21342LFIL**
3*	Shock absorber holder with shock absorber SA14S, right	ZSM25HD	**21342RFIL**
4	Intermediate position stop complete, without magnetic switch option	ZSM25HD	**21343FIL**
5	Intermediate position stop complete, with magnetic switch option	ZSM25HD	**21344FIL**
6	End stop with fine adjustment	ZSM25HD	**21346FIL**

* The shock absorbers are installed in the shock absorber holder and adjusted in our workshop.

Note:
For movement onwards from the intermediate position, the intermediate position stop must advance.
The intermediate position stop can only advance if both cylinder chambers of the OSP-P cylinder are pressurized.

The right to introduce technical modifications is reserved

Order Instructions – HEAVY DUTY - HD

1-4	5+6	7	8	9	10	11	12-16	17	18	19	20	21	22	23	24	25
OSPP	25	0	0	0	0	0	01100	0	0	0	0	0	0	0	0	0

Piston-Ø
25
32
40
50

Stroke
Input in mm (5 digits)

Piston Mounting	
0	without

Measuring system	
0	without
X	SFI 0.1 mm
Y	SFI 1 mm

Screws	
0	standard

Cushioning	
0	standard
1	max. length [3]
2	VS variable stop, soft left for HD
3	VS variable stop, hard, left for HD
4	VS variable stop, soft, right for HD
5	VS variable stop, hard, right for HD
6	VS variable stop, soft, both sides for HD
7	VS variable stop, hard, both sides for HD

Version / Piston	
0	standard
1	Tandem

Lubrication	
0	standard
1	Slow speed [2] [3]

Cover / Cable Channel	
0	standard
1	cable channel
2	cable channel two-sided
X	without Cover rail

Air Connection	
0	standard
1	on the end face
2	both at one end (not turnable)
3	left standard right end face
4	right standard left end face
A	3/2 way valve VOE 24 V= Ø 25,32,40, 50
B	3/2 way valve VOE 230 V~/110 V= Ø 25,32,40,50
C	3/2 way valve VOE 48 V= Ø 25,32,40,50
E	3/2 way valve VOE 110 V~ Ø 25,32,40,50

Seals	
0	standard (NBR)
1	Viton® [1]

End cap position	
0	l+r 0° = in front
1	l+r 90° = underneath
2	l+r 180° = at the back
3	l+r 270° = same side as outerband
4	l 90° = underneath; r 0° = in front
5	l 180° = at the back; r 0° = in front
6	l 270° = same side as outerband; r 0° = in front
7	l 0° = in front; r 90° = underneath
8	l 180° = at the back; r 90° = underneath
9	l 270° = same side as outerband; r 90° = underneath
A	l 0° = in front; r 180° = at the back
B	l 90° = underneath; r 180° = at the back
C	l 270° = same side as outerband; r 180° = at the back
D	l 0° = in front; r 270° = same side as outerband
E	l 90° = underneath; r 270° = same side as outerband
F	l 180° = at the back; r 270° = same side as outerband

Guides/ Brakes/ Inversion	
0	without
D	HD

add. Guide Carriage	
0	without
D	Guide Carriage HD

End cap position (air connection)

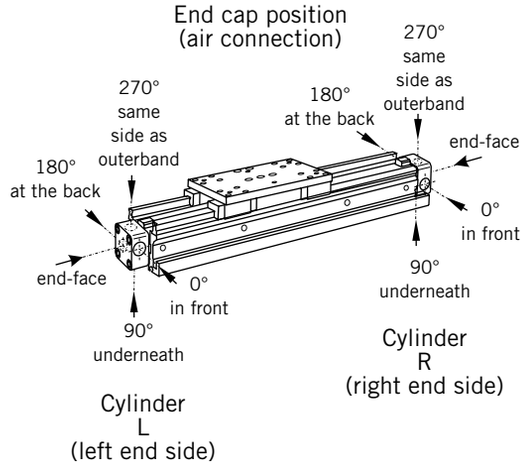

[1] Viton with VOE not possible.

[2] "Slow speed lubrication" in combination with „Viton® " seals on demand.

[3] „Lubrication slow speed" in combination with „max. cushioning length" not possible.

Active and Passive Brakes
Series OSP-P

Contents

Description	Page
Overview	88
Standard cylinder with Active brake	89-92
Plain bearing SLIDELINE with Active brake	49-51
Aluminium roller guide PROLINE with Active brake	59-61
Plain bearing SLIDELINE with Passive brake Multibrake	93-96
Aluminium roller guide PROLINE with Passive brake Multibrake	97-99

The right to introduce technical modifications is reserved

OSP
ORIGA
SYSTEM
PLUS

Active Brakes and Passive Brakes

Versions:

- ACTIVE Brake
- Plain bearing guide with integrated ACTIVE Brake
- Aluminium roller guide with integrated ACTIVE Brake
- Plain bearing guide with PASSIVE Brake
- Aluminium roller guide with PASSIVE Brake

Active Brake
for pneumatic linear drive
Series OSP-P
Piston diameters 25 - 80 mm.

See page 89-92

Slideline with Active Brake
Plain bearing guide SLIDELINE - SL
with integrated ACTIVE Brake
Piston diameters 25 - 50 mm.

See page 49-51

Proline with Active Brake
Aluminium roller guide
PROLINE - PL with
integrated ACTIVE Brake
Piston diameters 25 - 50 mm.

See page 59-61

Multibrake with Slideline
MULTI BRAKE – PASSIVE Brake
with plainbearing guide
SLIDELINE - SL
Piston diameter 25 - 80 mm.

See page 93-96

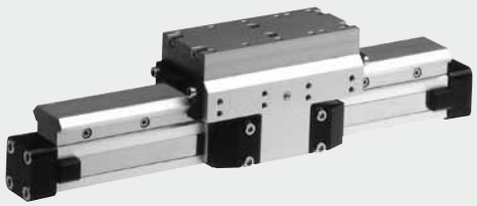

Multibrake with Proline
MULTI BRAKE – PASSIVE Brake with
aluminium roller guide
PROLINE - PL
Piston diameters 25 - 50 mm.

See page 97-99

Active Brake

OSP
ORIGA SYSTEM PLUS

Series AB 25 to 80
for linear drive
• Series OSP-P

Function

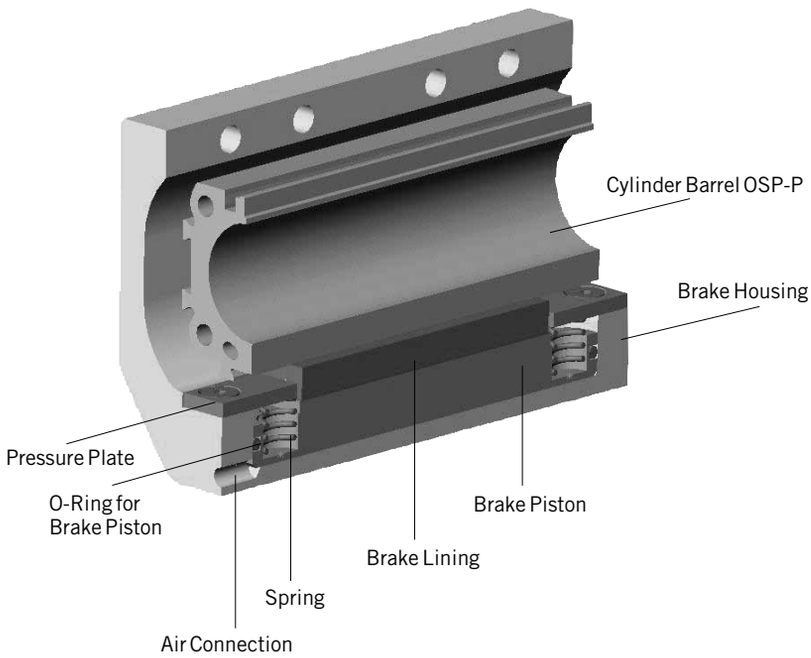

Features:

- Actuated by pressurisation
- Released by spring actuation
- Completely stainless version
- Holds position, even under changing load conditions

For further technical data, please refer to the data sheets for linear drives OSP-P (see from page 15).

Note:

For combinations Active Brake AB + SFI-plus + Magnetic Switch contact our technical department please.

Active brake in combination with Basic Cylinder see page 24, pos. 20

Forces and Weights

Series	For linear drive	Max. braking force [N] (1	Brake pad way [mm]	Mass [kg] Linear drive with brake 0 mm stroke	increase per 100 mm stroke	Brake *
AB 25	OSP-P25	350	2.5	1.0	0.197	0.35
AB 32	OSP-P32	590	2.5	2.02	0.354	0.58
AB 40	OSP-P40	900	2.5	2.83	0.415	0.88
AB 50	OSP-P50	1400	2.5	5.03	0.566	1.50
AB 63	OSP-P63	2170	3.0	9.45	0.925	3.04
AB 80	OSP-P80	4000	3.0	18.28	1.262	5.82

(1 – at 6 bar
both chambers pressurised
with 6 bar
Braking surface dry
– oil on the braking surface will
reduce the braking force

*** Please Note:**
The mass of the brake has to be added to the total moving mass when using the cushioning diagram.

For additional information on loads, forces and moment, please refer from page 16

The right to introduce technical modifications is reserved

Series OSP-P25 and P32 with Active Brake AB

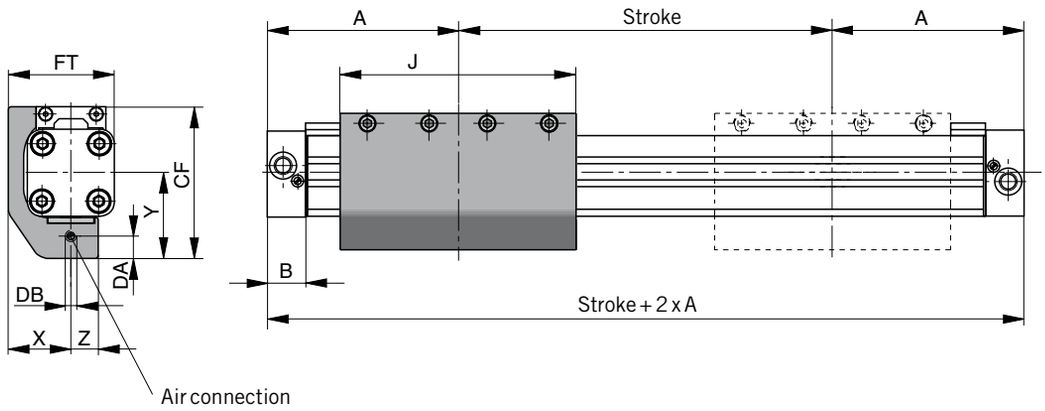

Series OSP-P40, P50, P63, P80 with Active Brake AB

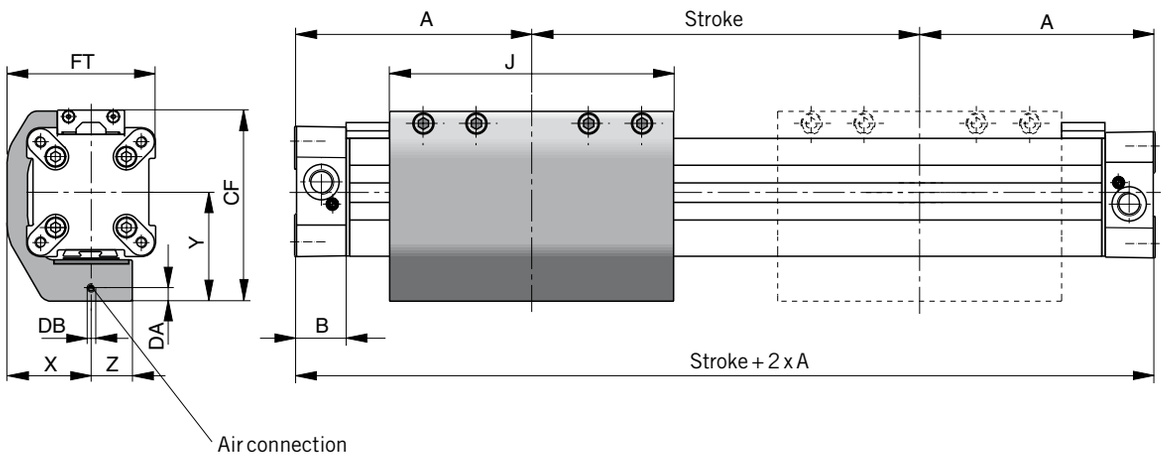

Dimension Table [mm]

Series	A	B	J	X	Y	Z	CF	DA	DB	FT
AB 25	100	22	117	29.5	43	13	74	4	M5	50
AB 32	125	25.5	151.4	36	50	15	88	4	M5	62
AB 40	150	28	151.4	45	58	22	102	7	M5	79.5
AB 50	175	33	200	54	69.5	23	118.5	7.5	M5	97.5
AB 63	215	38	256	67	88	28	151	9	G1/8	120
AB 80	260	47	348	83	105	32	185	10	G1/8	149

Series OSP – P25 and P32 with Active Brake AB: Type A3

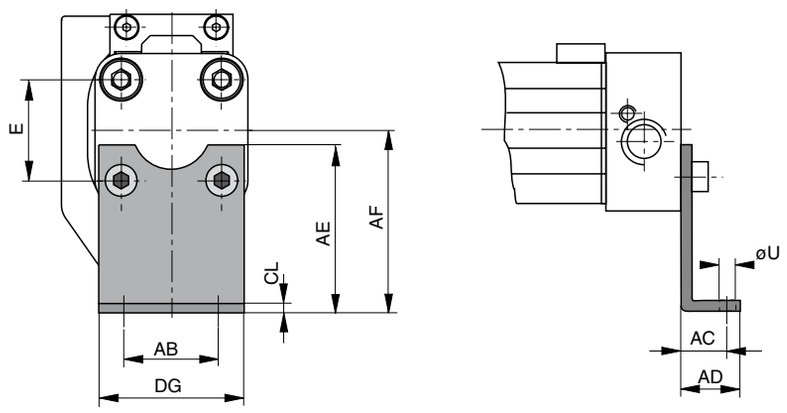

End Cap Mountings

On the end-face of each cylinder end cap there are four threaded holes for mounting the cylinder. The hole layout is square, so that the mounting can be fitted to the bottom, top or either side.

Material: Series OSP-P25, P32: Galvanised steel

The mountings are supplied in pairs.

Series OSP – P40 , P50, P63, P80 with Active Brake AB: Type C3

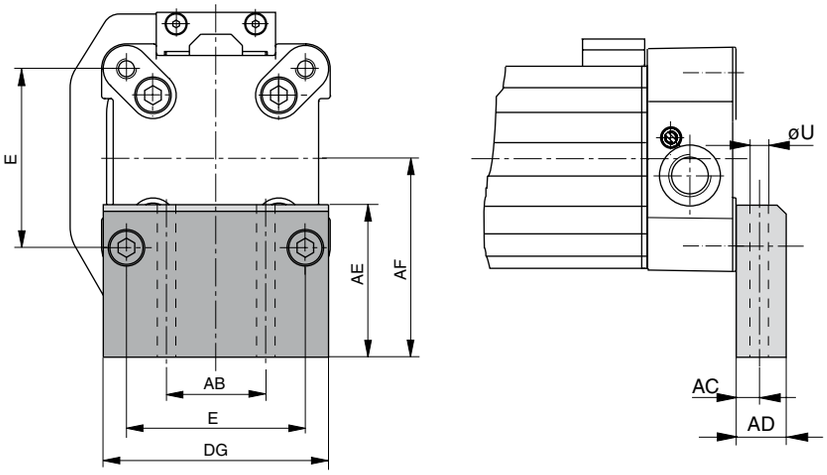

Material: Series OSP-P40, P50, P63, P80: Anodised aluminium

The mountings are supplied in pairs.

Stainless steel version on request.

Dimension Table [mm]

Series	E	øU	AB	AC	AD	AE	AF	CL	DG	Order No. Type A3	Order No. Type C3
AB 25	27	5.8	27	16	22	45	49	2.5	39	**2060FIL**	–
AB 32	36	6.6	36	18	26	42	52	3	50	**3060FIL**	–
AB 40	54	9	30	12.5	24	46	60	–	68	–	**20339FIL**
AB 50	70	9	40	12.5	24	54	72	–	86	–	**20350FIL**
AB 63	78	11	48	15	30	76	93	–	104	–	**20821FIL**
AB 80	96	14	60	17.5	35	88	110	–	130	–	**20822FIL**

The right to introduce technical modifications is reserved

Mid Section Support

Mid-section supports are required from a certain stroke length to prevent excessive deflection and vibration of the linear drive.

The diagrams show the maximum permissible unsupported length in relation to loading. Deflection of 0.5 mm max. between supports is permissible.
The mid section supports are attached to the dovetail rails, and can take axial loads.

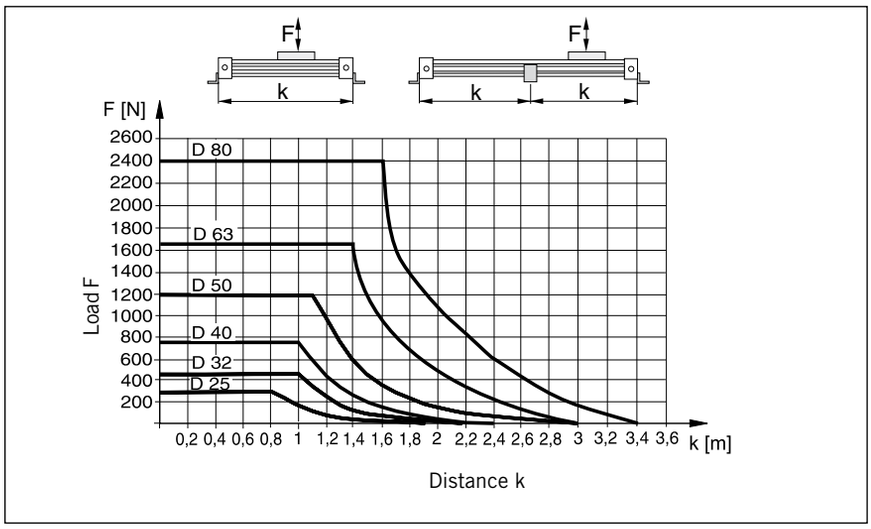

Mid Section Supports

Note to Type E3:

Mid section supports can only be mounted opposite of the brake housing.

Stainless steel version available on request.

Series OSP-P25 to P80 with Active Brake AB: Type E3
(Mounting from above / below with through-bolt)

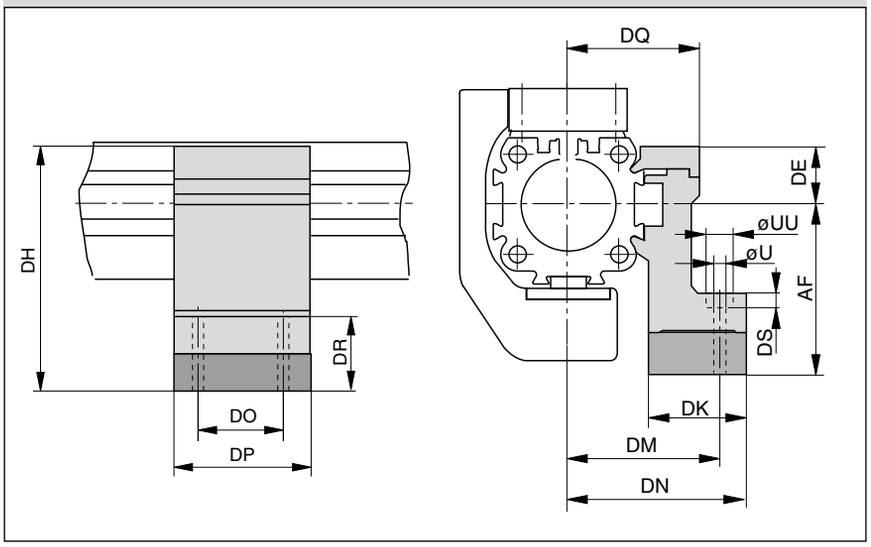

Dimension Table [mm]

Series	U	UU	AF	DE	DH	DK	DM	DN	DO	DP	DQ	DR	DS	Order no. Type E3
AB 25	5.5	10	49	16	65	26	40	47.5	36	50	34.5	35	5.7	**20353FIL**
AB 32	5.5	10	52	16	68	27	46	54.5	36	50	40.5	32	5.7	**20356FIL**
AB 40	7	–	60	23	83	34	53	60	45	60	45	32	–	**20359FIL**
AB 50	7	–	72	23	95	34	59	67	45	60	52	31	–	**20362FIL**
AB 63	9	–	93	34	127	44	73	83	45	65	63	48	–	**20453FIL**
AB 80	11	–	110	39.5	149.5	63	97	112	55	80	81	53	–	**20819FIL**

Accessories for linear drives with Active Brakes – please order separately

Description	For details information, see:
Clevis mounting	**Page 104**
Adaptor profile	**Page 118**
T-groove profile	**Page 119**
Connection profile	**Page 120**
Magnetic switch (can **only** be mounted opposite of the brake housing)	**Page 123-130**
Incremental displacement measuring system SFI-plus	**Page 135-139**

Multi-Brake Passive Brake

with plain bearing guide Slideline SL

OSP
ORIGA SYSTEM PLUS

Series MB-SL 25 to 80
for Linear-drive
• Series OSP-P

Versions

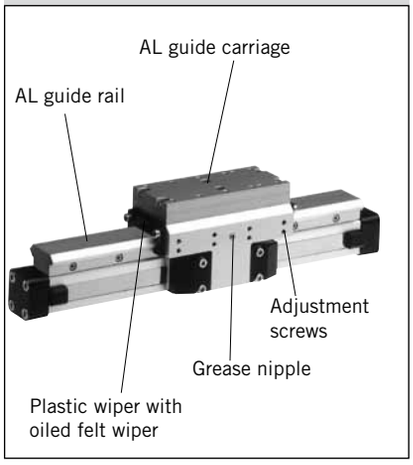

Function

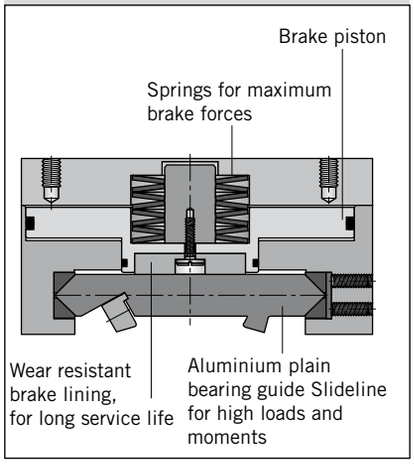

Function:

The Multi-Brake is a passive device. When the air pressure is removed the brake is actuated and movement of the cylinder is blocked. The brake is released by pressurisation.

The high friction, wear resistant brake linings allow the Multi-Brake to be used as a dynamic brake to stop cylinder movement in the shortest possible time. The powerful springs also allow the Multi-Brake to be used effectively in positioning applications.

Features:

- Brake operated by spring actuation
- Brake release by pressurisation
- Anodised aluminium rail, with prism shaped slide elements
- Adjustable plastic slide elements
- Composite sealing system with plastic and felt wiper elements to remove dirt and lubricate the slideway
- Replenishable guide lubrication by integrated grease nipples
- Blocking function in case of pressure loss
- Intermediate stops possible

Loads, Forces and Moments

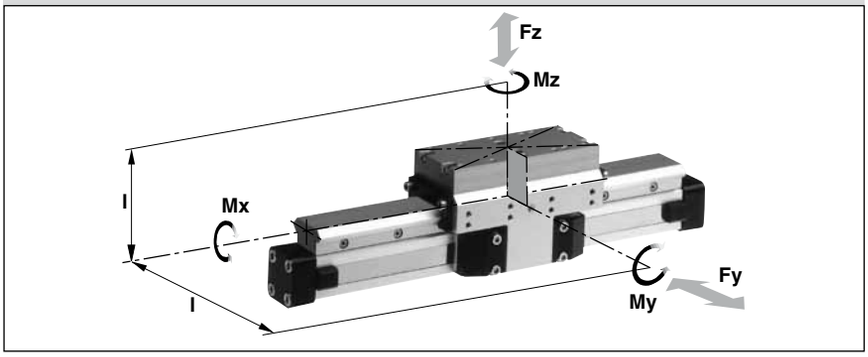

Technical Data:

The table shows the maximum values for light, shock-free operation, which must not be exceeded even in dynamic operation.

Load and moment data are based on speeds v < 0.2 m/s.

Operating pressure 4.5 - 8 bar
A pressure of 4.5 bar is required to release the brake.

For further technical information, please refer to the data sheets for linear drives OSP-P (see from page 15)

[1] Braking surface dry – oil on the braking surface will reduce the braking force

[2] **Please note:**
in the cushioning diagram, the mass of the guide carriage has to be added to the total moving mass.

Series	For linear drive	Max. moments [Nm]			Max. loads [N]	Max. brake force [N] [1]	Mass of linear drive with guide [kg]		Mass [2] guide carriage [kg]	Order-No. ** MB-SL Guide with passivebrake without cylinder *
		Mx	My	Mz	Fy, Fz		with 0 mm stroke	increase per 100 mm stroke		
MB-SL 25	OSP-P25	14	34	34	675	470	2.04	0.39	1.10	**20796**
MB-SL 32	OSP-P32	29	60	60	925	790	3.82	0.65	1.79	**20797**
MB-SL 40	OSP-P40	50	110	110	1500	1200	5.16	0.78	2.34	**20798**
MB-SL 50	OSP-P50	77	180	180	2000	1870	8.29	0.97	3.63	**20799**
MB-SL 63	OSP-P63	120	260	260	2500	2900	13.31	1.47	4.97	**20800**
MB-SL 80	OSP-P80	120	260	260	2500	2900	17.36	1.81	4.97	**20846**

** Please use this order pattern: Order-No. + „stroke in mm“ (5 digits)
Example: MB-SL guide with passive brake D 25 mm, stroke 1000 mm: 20796-01000

***MB-SL in combination with cylinder see page. 51, pos. 20**
For **linear drives** overview see page 9-13
For **mountings** see page 107-115

The right to introduce technical modifications is reserved

Series OSP-P with Passive Brake MB-SL

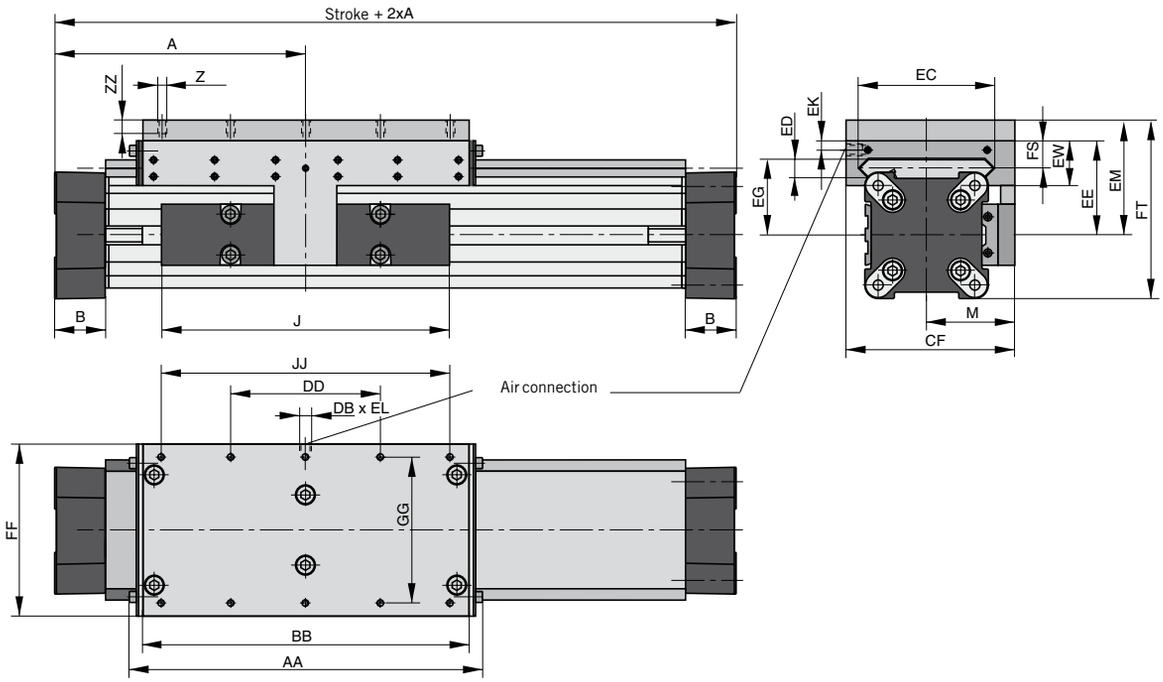

Dimension Table [mm]

Series	A	B	J	M	Z	AA	BB	DB	DD	CF	EC	ED	EE	EG	EK	EL	EM	EW	FF	FT	FS	GG	JJ	ZZ
MB-SL25	100	22	117	40,5	M6	162	142	M5	60	72.5	47	12	53	39	9	5	73	30	64	93.5	20	50	120	12
MB-SL32	125	25.5	152	49	M6	205	185	G1/8	80	91	67	14	62	48	7	10	82	33	84	108	21	64	160	12
MB-SL40	150	28	152	55	M6	240	220	G1/8	100	102	77	14	64	50	6.5	10	84	34	94	118.5	21.5	78	200	12
MB-SL50	175	33	200	62	M6	284	264	G1/8	120	117	94	14	75	56	10	12	95	39	110	138.5	26	90	240	12
MB-SL63	215	38	256	79	M8	312	292	G1/8	130	152	116	18	86	66	11	12	106	46	152	159	29	120	260	13
MB-SL80	260	47	348	96	M8	312	292	G1/8	130	169	116	18	99	79	11	12	119	46	152	185	29	120	260	13

Loading

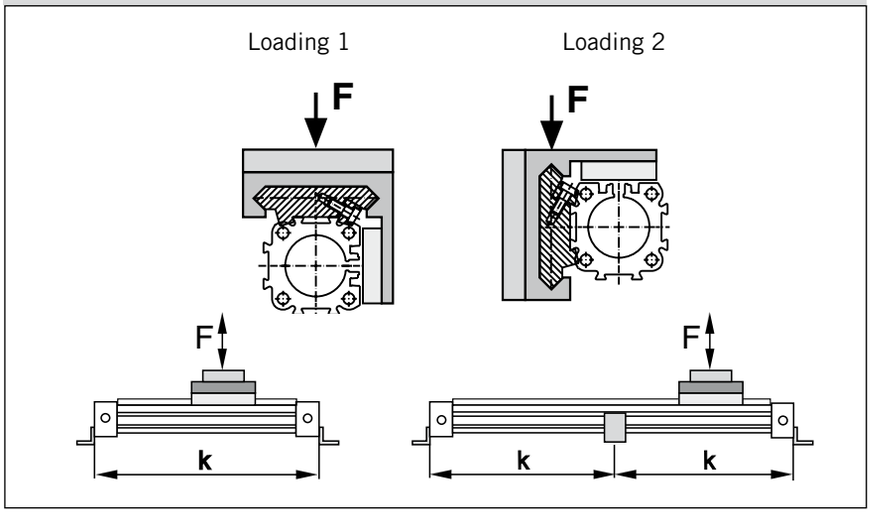

Mid Section Support

(for versions see page 106, 109)

Mid section supports are required from a certain stroke length to prevent excessive deflection and vibration of the linear drive.
The diagrams show the maximum permissible unsupported length in relation to loading. A distinction must be drawn between loading 1 and loading 2. Deflection of 0.5 mm max. between supports is permissable.

Note:

For speeds v > 0.5 m/s the distance between supports should not exceed 1 m.

Permissible Unsupported Length MB-SL25, MB-SL32

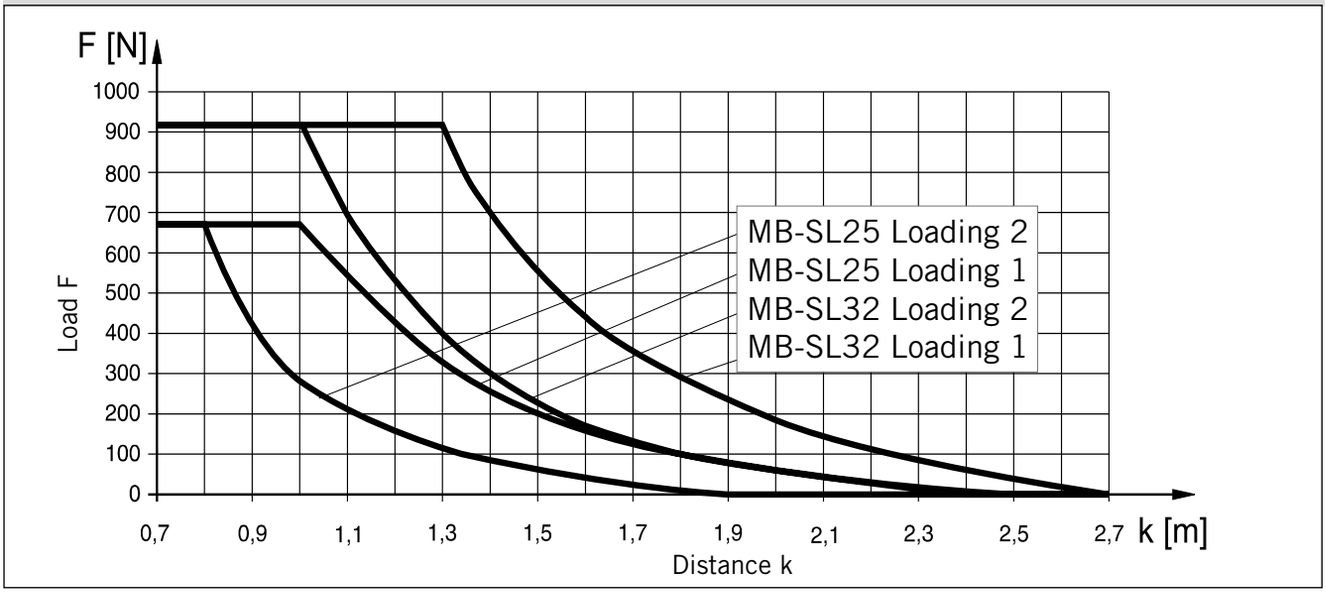

Permissible Unsupported Length MB-SL40, MB-SL50, MB-SL63 and MB-SL80

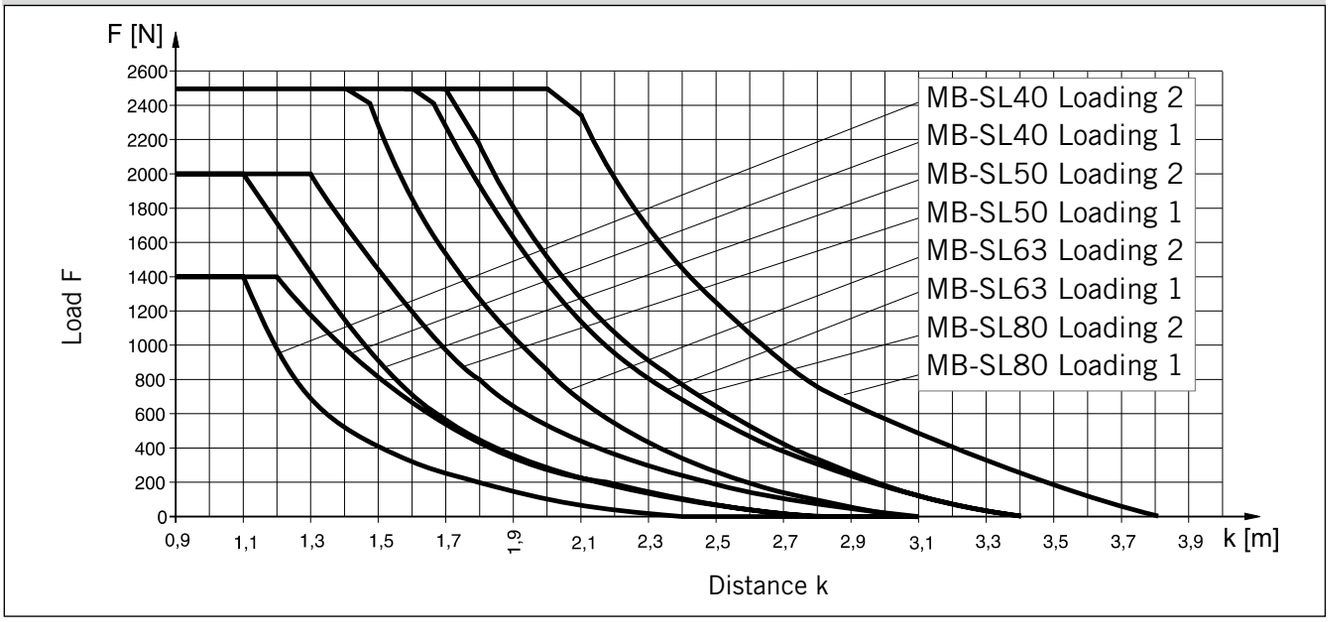

The right to introduce technical modifications is reserved

Application Example - Vertical Application

Control of a cylinder with
3/2 way valves. Basic position – **exhausted**

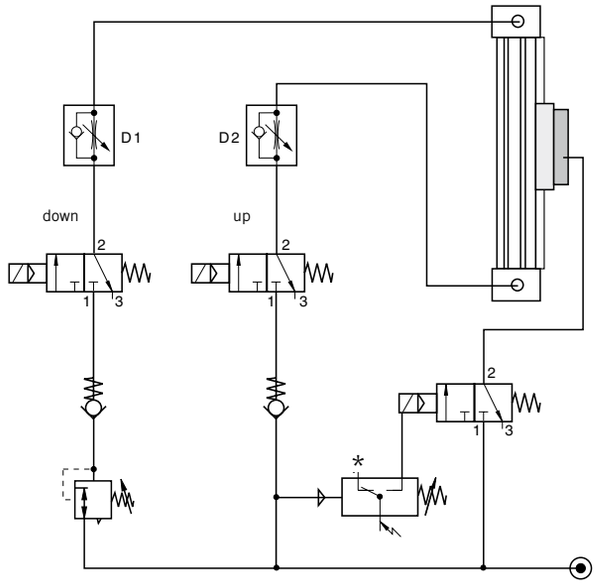

Control of a cylinder with
3/2 way valves. Basic position – **pressurised**

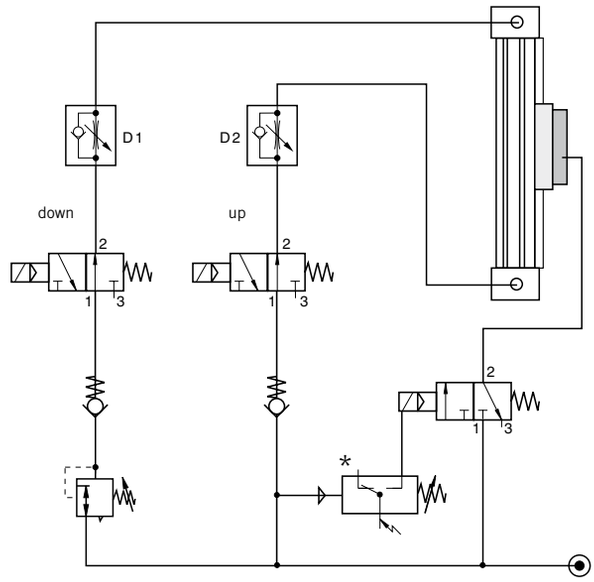

Control Examples

Under normal operating circumstances the pressure switch is closed and the air flows through the 3/2 way solenoid valves from port 1 to 2, thus lifting the brake from the rail (operating condition).
The brake is pressurised by means of a 3/2 way valve in combination with a pressure switch. When there is a pressure loss, the brake is actuated by the pressure switch.
When the air pressure is restored to both cylinder chambers, the brake is lifted and the linear drive can be moved again.

The speed regulating valves D1 and D2 control the speed of the linear drive, and have no influence on the brake. The two non-return valves give the system a higher stability.
The pressure regulating valve is used to compensate for the downward force in this vertical application.

Please note:
Before the brake is lifted, make sure that both air chambers of the linear drive are pressurised.
Small diameter tubing, fittings and valves with a nominal diameter, and tubing that is too long all change the reaction time of the brake!

* **Tip:**
The pressure switch actuates the brake when the pressure drops below the set value.

Multi-Brake Passive Brake

with Aluminium Roller Guide Proline PL

OSP
ORIGA SYSTEM PLUS

Series MB-PL 25 to 50
for Linear-drive
• Series OSP-P

Versions

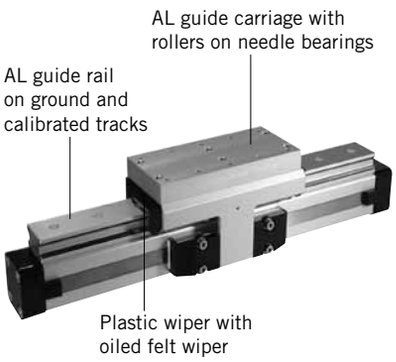

Function

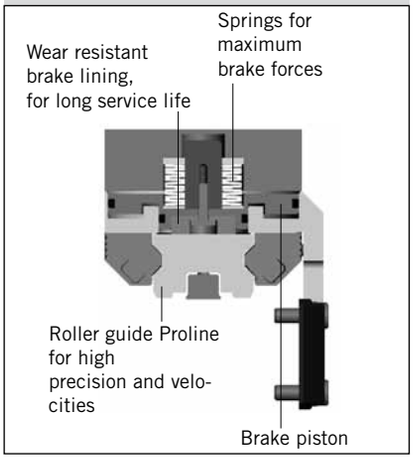

Function:

The Multi-Brake is a passive device. When the air pressure is removed the brake is actuated and movement of the cylinder is blocked. The brake is released by pressurisation.

The high friction, wear resistant brake linings allow the Multi-Brake to be used as a dynamic brake to stop cylinder movement in the shortest possible time. The powerful springs also allow the Multi-Brake to be used effectively in positioning applications.

Features:

- Brake operated by spring actuation
- Brake release by pressurisation
- Composite sealing system with plastic and felt wiper elements to remove dirt and lubricate the slideway
- Blocking function in case of pressure loss
- Intermediate stops possible

Loads, Forces and Moments

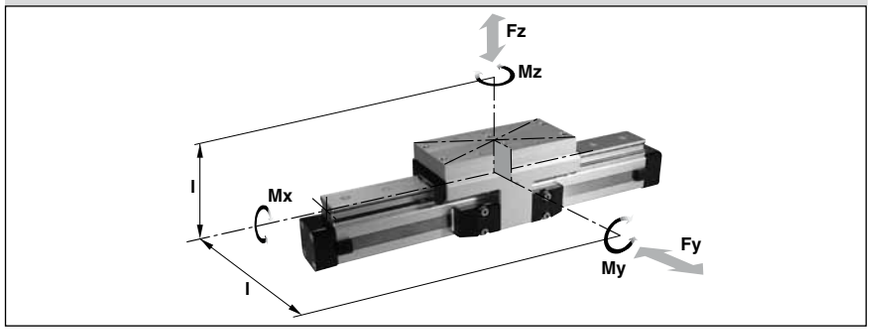

Technical Data

The table shows the maximal permissible loads. If multiple moments and forces act upon the cylinder simultaneously, the following equasion applies:

$$\frac{Mx}{Mx_{max}} + \frac{My}{My_{max}} + \frac{Mz}{Mz_{max}} + \frac{Ly}{Ly_{max}} + \frac{Lz}{Lz_{max}} \leq 1$$

The sum of the loads should not exceed >1. With a load factor of less than 1, service life is 8000 km

The table shows the maximum permissible values for light, shock-free operation, which must not be exceeded even under dynamic conditions.

Operating Pressure 4.5 - 8 bar.
A pressure of min. 4.5 bar release the brake.

[1] Braking surface dry – oil on the braking surface will reduce the braking force
[2] **Please note:**
In the cushioning diagram, the mass of the guide carriage has to be added to the total moving mass.

Series	For linear drive	Max. moments [Nm]			Max. loads [N]	Max. brake force [N] [1]	Mass of linear drive with guide [kg]		Mass [2] guide carrriage [kg]	Order-No. ** MB-PL Guide with passivebrake without cylinder *
		Mx	My	Mz	Fy, Fz		with 0 mm stroke	increase per 100 mm stroke		
MB-PL25	OSP-P25	16	39	39	857	315	2.14	0.40	1.24	**20864**
MB-PL32	OSP-P32	29	73	73	1171	490	4.08	0.62	2.02	**20865**
MB-PL40	OSP-P40	57	158	158	2074	715	5.46	0.70	2.82	**20866**
MB-PL50	OSP-P50	111	249	249	3111	1100	8.60	0.95	4.07	**20867**

** Please use this order pattern: Order-No. + „stroke in mm“ (5 digits)
Example: MB-PL guide with passive brake, D25 mm, stroke 1000 mm: 20864-01000

***MB-PL in combination with cylinder see page 61, pos. 20**
For **linear drives** overview see page 9-13
For **mountings** see page 107-115

The right to introduce technical modifications is reserved

Series OSP-P with Passive Brake MB-PL

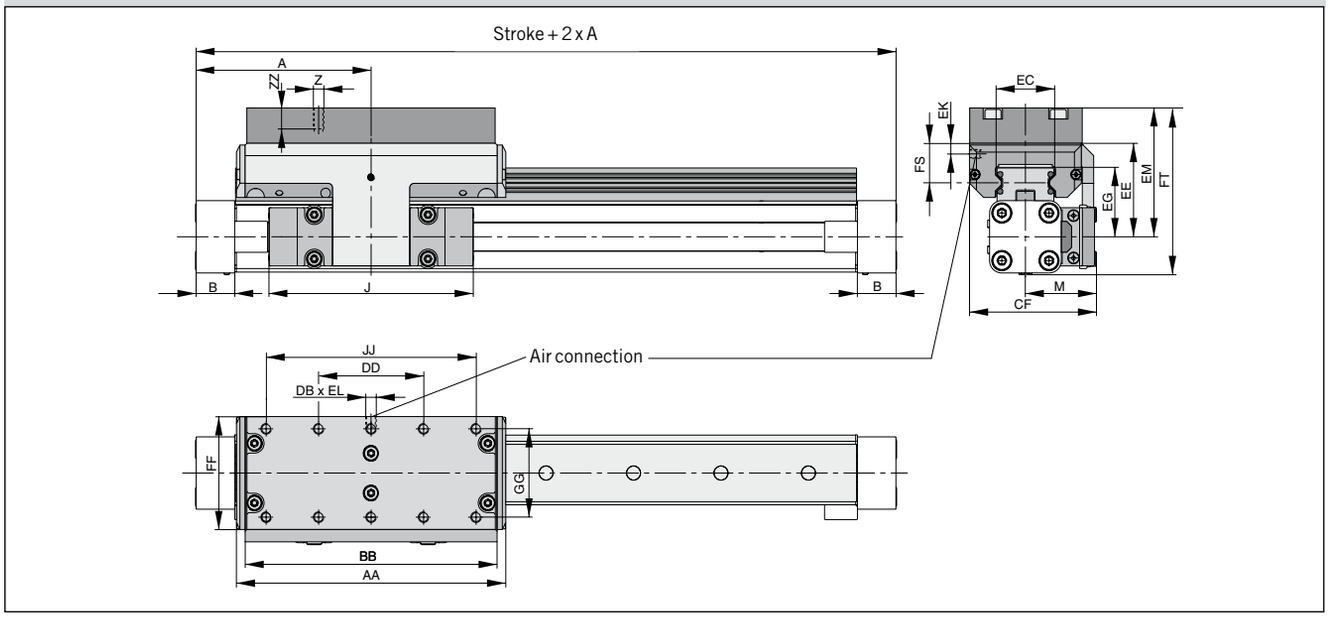

Dimension Table [mm] Series OSP-P MB-PL25, MB-PL32, MB-PL40, MB-PL50

Series	A	B	J	M	Z	AA	BB	DB	DD	CF	EC	EE	EG	EK	EL	EM	FF	FS	FT	GG	JJ	ZZ
MB-PL25	100	22	117	40.5	M6	154	144	M5	60	72.5	32.5	53	39	9	5	73	64	23	93.5	50	120	12
MB-PL32	125	25.5	152	49	M6	197	187	G1/8	80	91	42	62	48	7	10	82	84	25	108	64	160	12
MB-PL40	150	28	152	55	M6	232	222	G1/8	100	102	47	64	50.5	6.5	10	84	94	23.5	118.5	78	200	12
MB-PL50	175	33	200	62	M6	276	266	G1/8	120	117	63	75	57	10	12	95	110	29	138.5	90	240	16

Mid Section Support

(For versions see page 106, 109)

Mid section supports are required from a certain stroke length to prevent excessive deflection and vibration of the linear drive. The diagrams show the maximum permissible unsupported length in relation to loading.
A distinction must be drawn between loading 1 and loading 2. Deflection of 0.5 mm max. between supports is permissible.

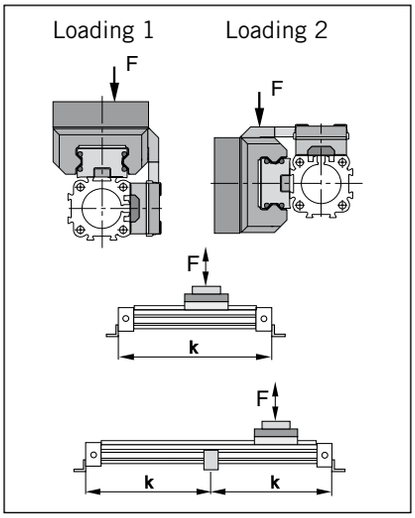

Note:

For speeds v > 0.5 m/s the distance between supports should not exceed 1 m.

Permissible Unsupported Length OSP-P MB-PL25, MB-PL32, MB-PL40, MB-PL50

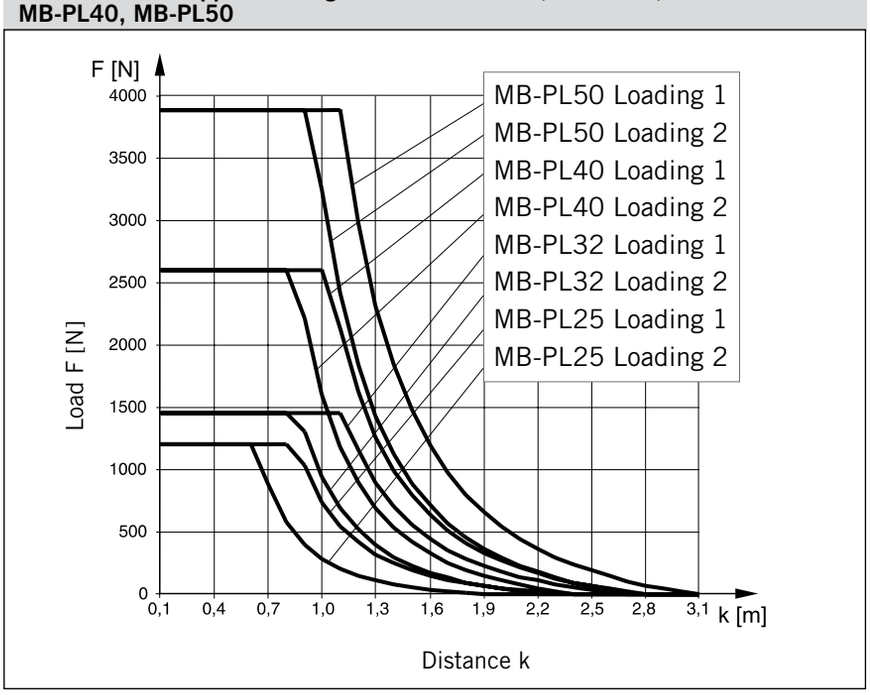

Application Example - Vertical Application

Control of a cylinder with
3/2 way valves. Basic position – **exhausted**

Control of a cylinder with
3/2 way valves. Basic position – **pressurised**

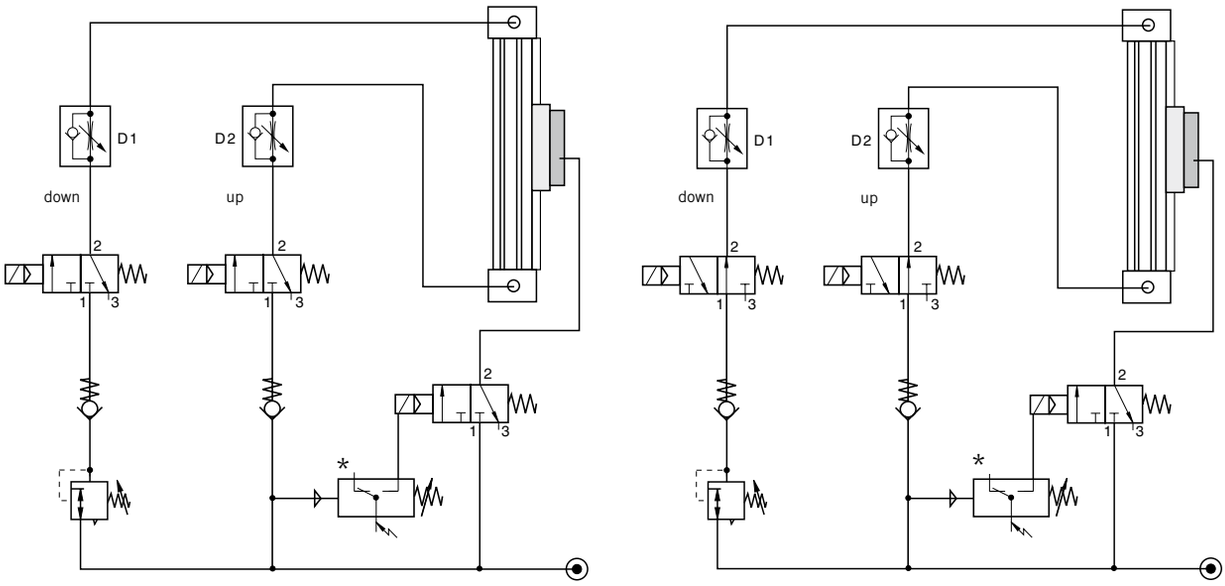

Control Examples

Under normal operating circumstances the pressure switch is closed and the air flows through the 3/2 way solenoid valves from port 1 to 2, thus lifting the brake from the rail (operating condition).
The brake is pressurised by means of a 3/2 way valve in combination with a pressure switch. When there is a pressure loss, the brake is actuated by the pressure switch.
When the air pressure is restored to both cylinder chambers, the brake is lifted and the linear drive can be moved again.

The speed regulating valves D1 and D2 control the speed of the linear drive, and have no influence on the brake. The two non-return valves give the system a higher stability.
The pressure regulating valve is used to compensate for the downward force in this vertical application.

Please note:
Before the brake is lifted, make sure that both air chambers of the linear drive are pressurised.
Small diameter tubing, fittings and valves with a nominal diameter, and tubing that is too long all change the reaction time of the brake!

* **Tip:**
The pressure switch actuates the brake when the pressure drops below the set value.

The right to introduce technical modifications is reserved

Linear Drive-Accessories (Mountings and Magnetic Switches) Series OSP-P

Contents

Description	Page
Overview	102
Clevis Mounting	103-104
End Cap Mountings	105
End Cap Mountings (for Linear Drives with guides)	107, 108, 110, 112, 113
Mid-Section Support	106
Mid-Section Support (for Linear Drives with guides)	107, 109, 111, 114, 115
Inversion Mounting	117
Adaptor Profile	118
T-Slot Profile	119
Connection Profile	120
Duplex Connection	121
Multiplex Connection	122
Magnetic Switch, standard version	123-125
Magnetic Switch for T-Nut mounting	127-130
Magnetic Switch ATEX-version Ⓔx	131-133
Cable Cover	126

The right to introduce technical modifications is reserved

Linear Drive Acccessories for Series OSP-P	
Description	
Clevis Mounting	Page 103-104
End Cap Mountings	Page 105
End Cap Mountings (for Linear Drives with guides)	From page 107
Mid-Section Support	Page 106
Mid-Section Support (for Linear Drives with guides)	From page 107
Inversion Mounting	Page 117
Adaptor Profile	Page 118
T-Slot Profile	Page 119
Connection Profile	Page 120
Dulex Connection	Page 121
Multiplex Connection	Page 122
Magnetic Switch, standard version Magnetic Switch, ATEX-version Ⓔx Magnetic Switch for T-Nut mounting	Page 123-125 Page 131-133 Page 127-130
Cable cover	Page 126

Series OSP-P10

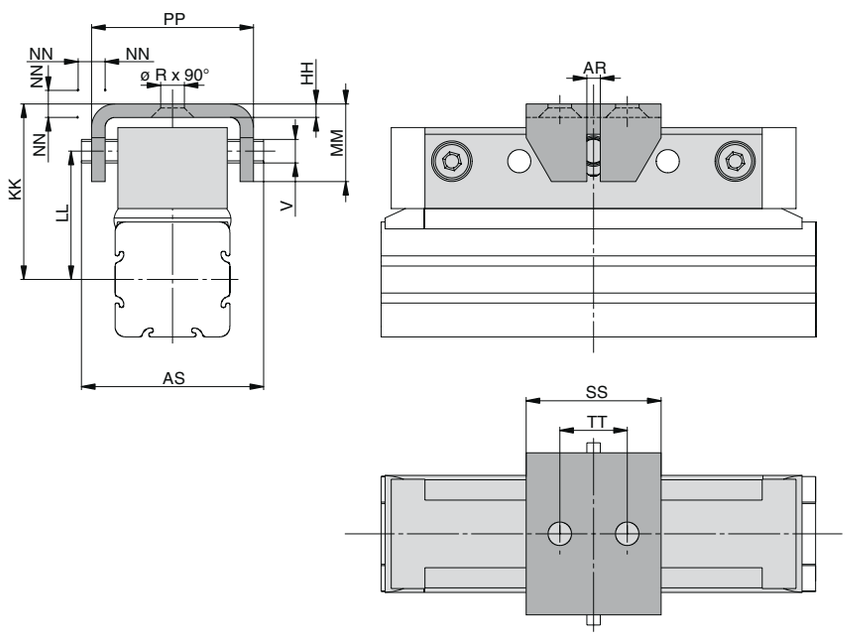

Linear Drive Accessories

ø 10 mm
Clevis Mounting

OSP
ORIGA
SYSTEM
PLUS

For Linear-drive
- **Series OSP-P**

When external guides are used, parallelism deviations can lead to mechanical strain on the piston. This can be avoided by the use of a clevis mounting.
In the drive direction, the mounting has very little play.
Freedom of movement is provided as follows:

- **Tilting in direction of movement**
- **Vertical compensation**
- **Tilting sideways**
- **Horizontal compensation**

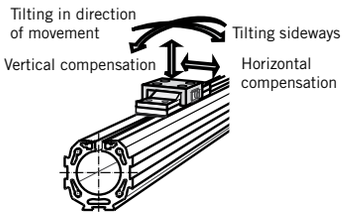

Dimension Table [mm]

Order instructions in combination with basic cylinder see page 24, pos. 19

For series	øR	V	AR	AS	HH	KK	LL	MM	NN*	PP	SS	TT	Order No. Standard	Order No. Stainless
OSP-P10	3.4	3.5	2	27	2	26	19	11.5	1	24	20	10	**20971FIL**	–

* Dimension NN gives the possible plus and minus play in horizontal and vertical movement, which also makes tilting sideways possible.

For **rodless pneumatic cylinder OSP-P** overview see page 9-13

The right to introduce technical modifications is reserved

Linear Drive Accessories
ø 16-80 mm
Clevis Mounting

OSP
ORIGA SYSTEM PLUS

For Linear-drive
• Series OSP-P

When external guides are used, parallelism deviations can lead to mechanical strain on the piston. This can be avoided by the use of a clevis mounting.
In the drive direction, the mounting has very little play.
Freedom of movement is provided as follows:

- **Tilting in direction of movement**
- **Vertical compensation**
- **Tilting sideways**
- **Horizontal compensation**

A stainless steel version is also available.

Series OSP-P16 to 32

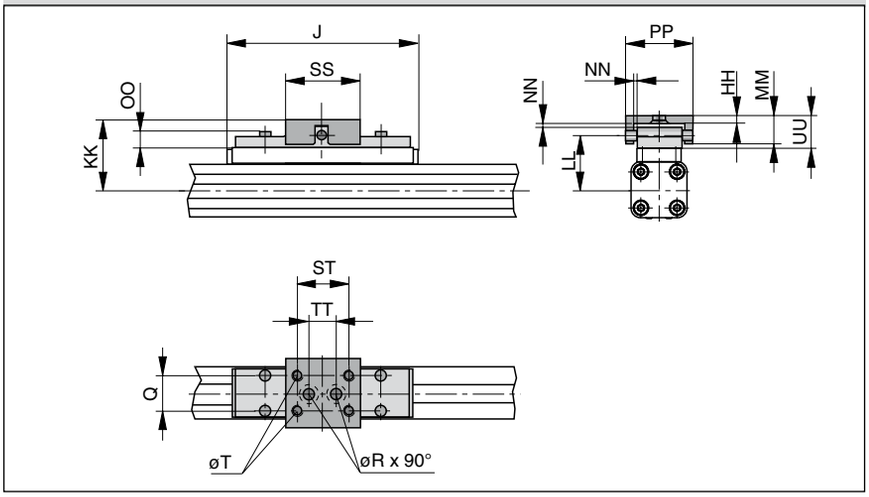

Series OSP-P40 to 80

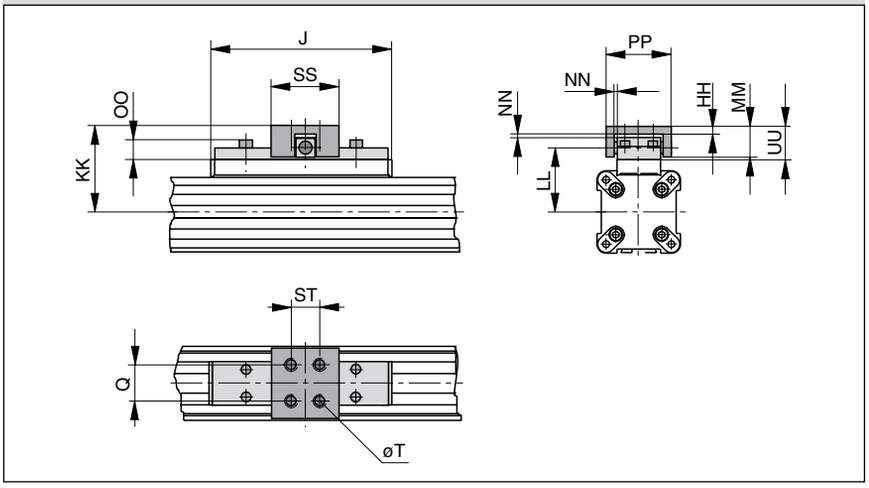

Please note:
When using additional inversion mountings, take into account the dimensions on page 117.

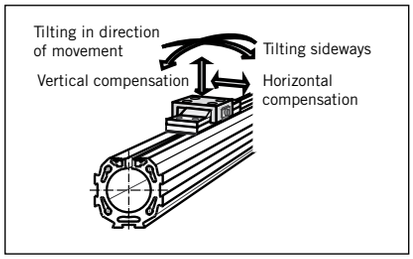

Dimension Table [mm] **Order instructions in combination with basic cylinder see page 24, pos. 19**

For series	J	Q	T	øR	HH	KK	LL	MM	NN*	OO	PP	SS	ST	TT	UU	Order No. Standard	Order No. Stainless
OSP-P16	69	10	M4	4.5	3	34	26.6	10	1	8.5	26	28	20	10	11	**20462FIL**	**20463FIL**
OSP-P25	117	16	M5	5.5	3.5	52	39	19	2	9	38	40	30	16	21	**20005FIL**	**20092FIL**
OSP-P32	152	25	M6	6.6	6	68	50	28	2	13	62	60	46	40	30	**20096FIL**	**20094FIL**
OSP-P40	152	25	M6	–	6	74	56	28	2	13	62	60	46	–	30	**20024FIL**	**20093FIL**
OSP-P50	200	25	M6	–	6	79	61	28	2	13	62	60	46	–	30	**20097FIL**	**20095FIL**
OSP-P63	256	37	M8	–	8	100	76	34	3	17	80	80	65	–	37	**20466FIL**	**20467FIL**
OSP-P80	348	38	M10	–	8	122	96	42	3	16	88	90	70	–	42	**20477FIL**	**20478FIL**

* Dimension NN gives the possible plus and minus play in horizontal and vertical movement, which also makes tilting sideways possible.

For **rodless pneumatic cylinder OSP-P** overview see page 9-13

Linear Drive Accessories

ø 10-80 mm
End Cap Mountings

OSP
ORIGA SYSTEM PLUS

For Linear-drive
• Series OSP-P

On the end-face of each end cap there are four threaded holes for mounting the actuator.
The hole layout is square, so that the mounting can be fitted to the bottom, top or either side, regardless of the position chosen for the air connection.

Material:
Series OSP-P10 – P32:
Galvanised steel.
Series OSP-P40 – P80:
Anodized aluminium.

The mountings are supplied in pairs.

Series OSP-P10 : Type A1

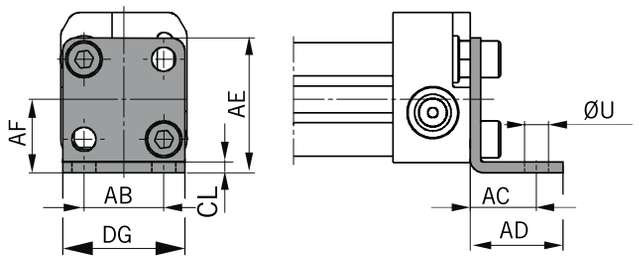

Series OSP-P16 to 32: Type A1

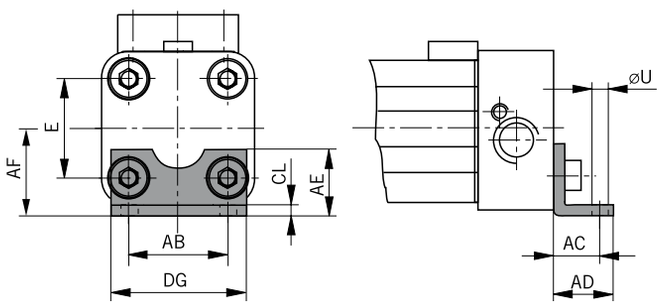

Series OSP-P40 to 80: Type C1

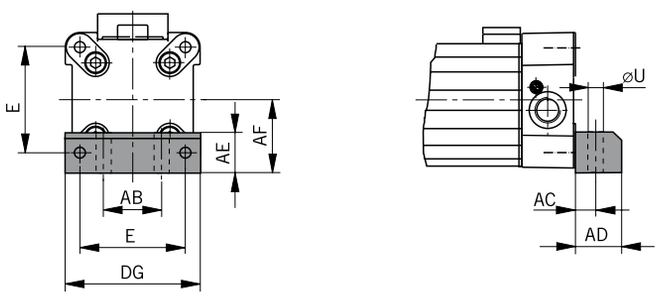

Dimension Table [mm]

For series	E	ØU	AB	AC	AD	AE	AF	CL	DG	Order-No. (* Type A1	Order-No. (* Type C1
OSP-P10	-	3.6	12	10	14	20.2	11	1.6	18.4	**0 240FIL**	**–**
OSP-P16	18	3.6	18	10	14	12.5	15	1.6	26	**20408FIL**	**–**
OSP-P25	27	5.8	27	16	22	18	22	2.5	39	**2010FIL**	**–**
OSP-P32	36	6.6	36	18	26	20	30	3	50	**3010FIL**	**–**
OSP-P40	54	9	30	12.5	24	24	38	–	68	**–**	**4010FIL**
OSP-P50	70	9	40	12.5	24	30	48	–	86	**–**	**5010FIL**
OSP-P63	78	11	48	15	30	40	57	–	104	**–**	**6010FIL**
OSP-P80	96	14	60	17.5	35	50	72	–	130	**–**	**8010FIL**

(*= Pair

For **rodless pneumatic cylinder OSP-P** overview see page 9-13

The right to introduce technical modifications is reserved

Linear Drive Accessories

ø 10-80 mm
Mid-Section Support

OSP
ORIGA SYSTEM PLUS

For Linear-drive
• Series OSP-P

Note on Types E1 and D1 (P16 – P80):
The mid-section support can also be mounted on the underside of the actuator, in which case its distance from the centre of the actuator is different.

For design notes, see page 17.

Stainless steel version on request.

Series OSP-10, Type E1
(Mounting from above / below using a cap screw)

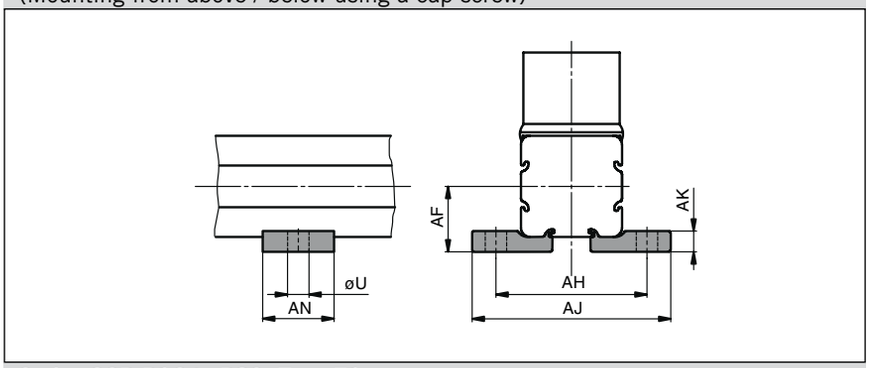

Series OSP-P16 to P80: Type E1
(Mounting from above / below using a cap screw)

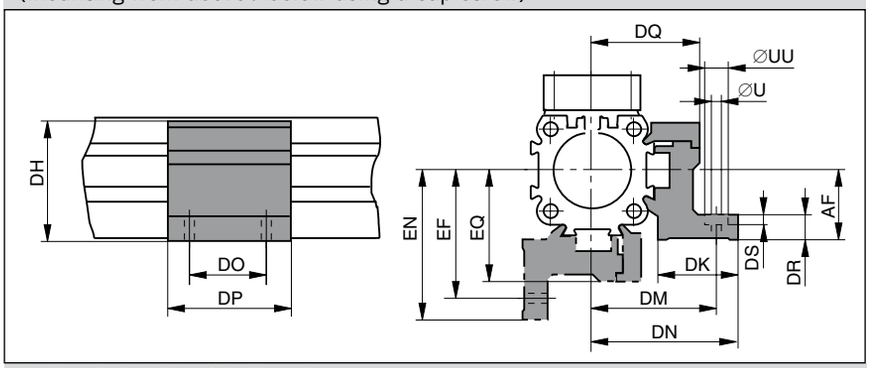

Series OSP-16 to 80, Type D1
(Mounting from below with 2 screws)

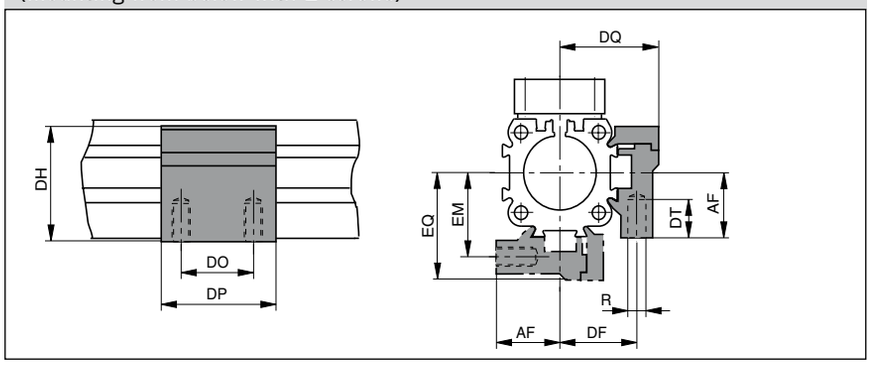

Dimension Table [mm] Series OSP-P10

For series	U	AF	AH	AJ	AK	AN	Order No. Type E1	Order No. Type D1
OSP-P10	3.6	11	25.4	33.4	3.5	12	**0250FIL**	**-**

Dimension Table [mm] – Series OSP-P16 to P80

For series	R	U	UU	AF	DF	DH	DK	DM	DN	DO	DP	DQ	DR	DS	DT	EF	EM	EN	EQ	Order No. Type E1	Order No. Type D1
OSP-P16	M3	3.4	6	15	20	29.2	24	32	36.4	18	30	27	6	3.4	6.5	32	20	36.4	27	**20435FIL**	**20434FIL**
OSP-P25	M5	5.5	10	22	27	38	26	40	47.5	36	50	34.5	8	5.7	10	41.5	28.5	49	36	**20009FIL**	**20008FIL**
OSP-P32	M5	5.5	10	30	33	46	27	46	54.5	36	50	40.5	10	5.7	10	48.5	35.5	57	43	**20158FIL**	**20157FIL**
OSP-P40	M6	7	–	38	35	61	34	53	60	45	60	45	10	–	11	56	38	63	48	**20028FIL**	**20027FIL**
OSP-P50	M6	7	–	48	40	71	34	59	67	45	60	52	10	–	11	64	45	72	57	**20163FIL**	**20162FIL**
OSP-P63	M8	9	–	57	47.5	91	44	73	83	45	65	63	12	–	16	79	53.5	89	69	**20452FIL**	**20451FIL**
OSP-P80	M10	11	–	72	60	111.5	63	97	112	55	80	81	15	–	25	103	66	118	87	**20482FIL**	**20480FIL**

For **rodless pneumatic cylinder OSP-P** overview see page 9-13

Linear Drive Accessories

Mountings for Linear Drives fitted with OSP-Guides

Overview

Mounting Type	Type	Type – OSP Guides: SLIDELINE PROLINE MULTIBRAKE 16 [1]	25	32	40	50	63 [1]	80 [1]	POWERSLIDE 16/25	25/25	25/35	25/44	32/35	32/44	40/44	40/60	50/60	50/76
End cap mounting	Type A1	X							X									
	Type A2	O	O	O														
	Type A3									O	O		O					
End cap mounting, reinforced	Type B1		X	X						X	X	X	X	X				
	Type B3								O									
	Type B4											O		O				
	Type B5																	
End cap mounting	Type C1				X	X	X	X							X	X	X	X
	Type C2				O	O												
	Type C3						O	O							O		O	
	Type C4															O		O
Mid section support, small	Type D1	X	X	X	X	X	X	X	X	X	X	X	X	X	X	X	X	X
Mid section support, wide	Type E1	X	X	X	X	X	X	X	X	X	X	X	X	X	X	X	X	X
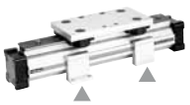	Type E2	O	O	O	O	O												
	Type E3						O	O	O	O	O		O		O		O	
	Type E4											O		O		O		O
	Type E5																	

X = carriage mounted in top (12 o'clock position)

O = carriage mounted in lateral (3 or 9 o'clock position)

= available components

[1] = not available for all sizes

For Linear-drives
- **Series OSP-P**

Note:
For mountings and mid-section supports for linear drives with recirculating ball bearing guide STARLINE, for recirculating ball bearing guide KF,
see page 110 to 115.

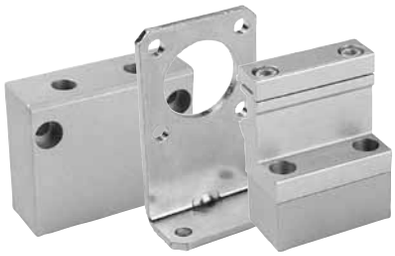

For **rodless pneumatic cylinder OSP-P** see from page 9

The right to introduce technical modifications is reserved

End cap mountings*

Four internal screw threads are located in the end faces of all OSP actuators for mounting the drive unit. End cap mountings may be secured across any two adjacent screws.

Material:

Series OSP-16, 25, 32:
Galvanised steel

Series OSP-40,50, 63, 80:
Anodized aluminium

The mountings are supplied in pairs.

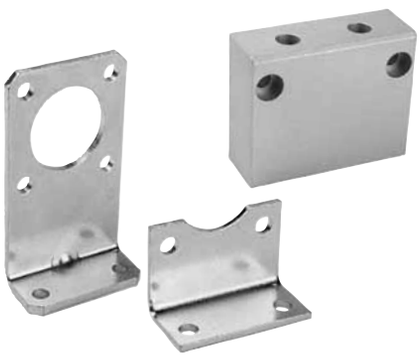

Series OSP-P16, 25, 32: Type A

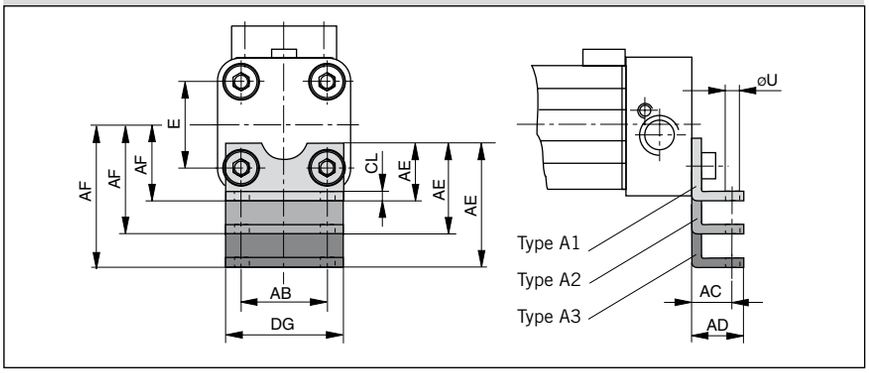

Series OSP-P16, 25, 32: Type B

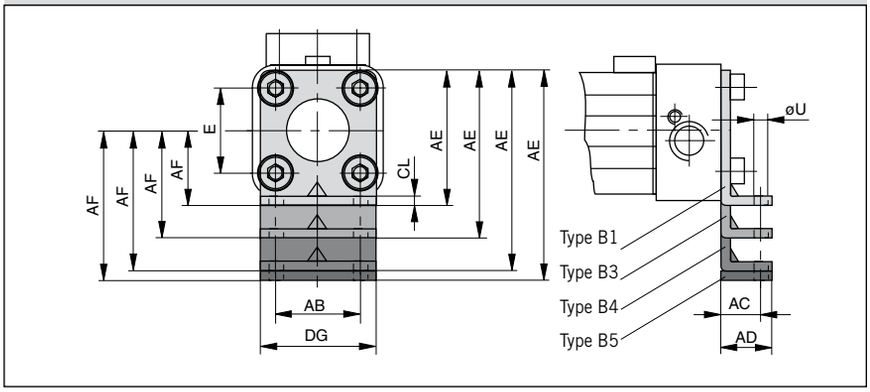

Dimension Table [mm]
– Dimensions AE and AF (Dependant on the mounting type)

Mount. type	Dimensions AE for size							AF for size						
	16	25	32	40	50	63	80	16	25	32	40	50	63	80
A1	12.5	18	20	–	–	–	–	15	22	30	–	–	–	–
A2	27.5	33	34	–	–	–	–	30	37	44	–	–	–	–
A3	–	45	42	–	–	–	–	–	49	52	–	–	–	–
B1	–	42	55	–	–	–	–	–	22	30	–	–	–	–
B3	55	–	–	–	–	–	–	42	–	–	–	–	–	–
B4	–	80	85	–	–	–	–	–	60	60	–	–	–	–
B5	–	–	90	–	–	–	–	–	–	65	–	–	–	–
C1	–	–	–	24	30	40	50	–	–	–	38	48	57	72
C2	–	–	–	37	39	–	–	–	–	–	51	57	–	–
C3	–	–	–	46	54	76	88	–	–	–	60	72	93	110
C4	–	–	–	56	77	–	–	–	–	–	70	95	–	–

Series OSP-P40, 50, 63, 80: Type C

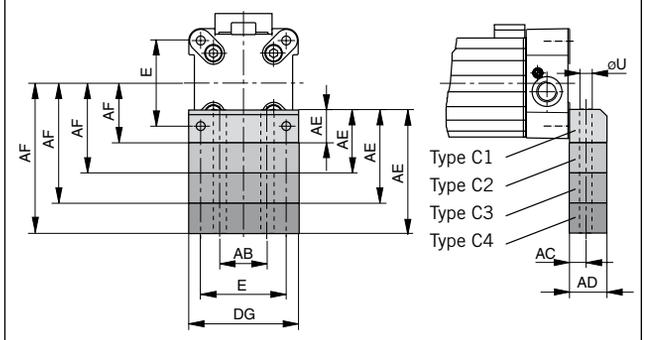

Dimension Table [mm]

For series	E	øU	AB	AC	AD	CL	DG
OSP-P16	18	3.6	18	10	14	1.6	26
OSP-P25	27	5.8	27	16	22	2.5	39
OSP-P32	36	6.6	36	18	26	3	50
OSP-P40	54	9	30	12.5	24	-	68
OSP-P50	70	9	40	12.5	24	-	86
OSP-P63	78	11	48	15	30	-	104
OSP-P80	96	14	60	17.5	35	-	130

* see mounting instructions on page 107

Series OSP-P16 to 80: Type E.
(Mounting from above / below using a cap screw)

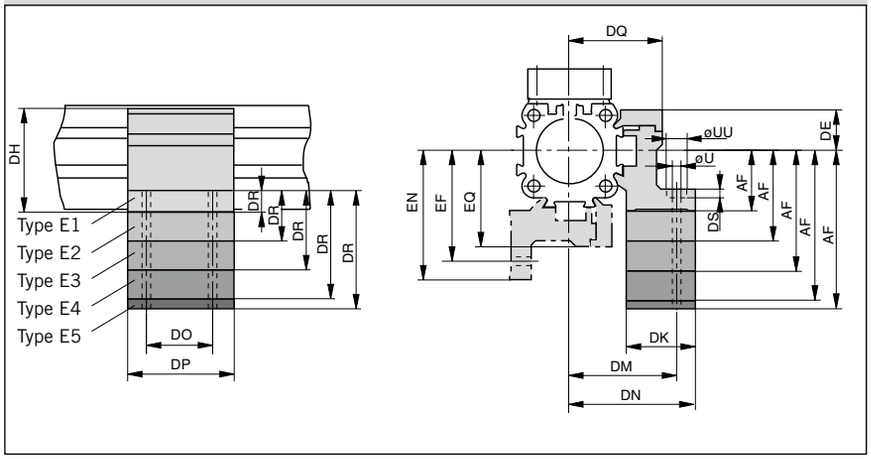

Mid-Section Support

Information regarding type E1 and D1:

Mounting of the mid section supports is also possible on the lower side of the drive. In this case, please note the new centre line dimensions.

See layout information on
pages 50, 55,
pages 60, 65
pages 92, 95 and 98

Stainless steel version on request.

Series OSP-P16 to 80: Type D1
(Mounting from below with thread screw)

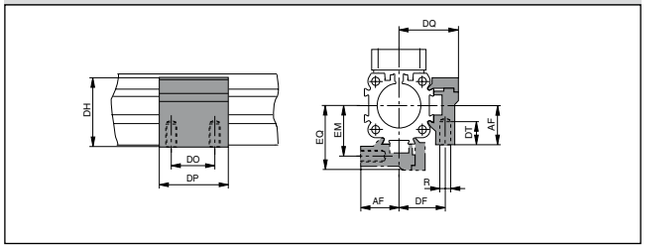

Dimension Table [mm]
– Dimensions AF and DR (Dependant on the mounting type)

Mount. type	Dimensions DR for size							Dimensions AF for size						
	16	25	32	40	50	63	80	16	25	32	40	50	63	80
D1	–	–	–	–	–	–	–	15	22	30	38	48	57	72
E1	6	8	10	10	10	12	15	15	22	30	38	48	57	72
E2	21	23	24	23	19	–	–	30	37	44	51	57	–	–
E3	33	35	32	32	34	48	53	42	49	52	60	72	93	110
E4	–	46	40	42	57	–	–	–	60	60	70	95	–	–
E5	–	–	45	–	–	–	–	–	–	65	–	–	–	–

Dimension Table [mm]

For series	R	U	UU	DE	DF	DH	DK	DM	DN	DO	DP	DQ	DS	DT	EF	EM	EN	EQ
OSP-P16	M3	3.4	6	14.2	20	29.2	24	32	36.4	18	30	27	3.4	6.5	32	20	36.4	27
OSP-P25	M5	5.5	10	16	27	38	26	40	47.5	36	50	34.5	5.7	10	41.5	28.5	49	36
OSP-P32	M5	5.5	10	16	33	46	27	46	54.5	36	50	40.5	5.7	10	48.5	35.5	57	43
OSP-P40	M6	7	–	23	35	61	34	53	60	45	60	45	–	11	56	38	63	48
OSP-P50	M6	7	–	23	40	71	34	59	67	45	60	52	–	11	64	45	72	57
OSP-P63	M8	9	–	34	47.5	91	44	73	83	45	65	63	–	16	79	53.5	89	69
OSP-P80	M10	11	–	39.5	60	111.5	63	97	112	55	80	81	–	25	103	66	118	87

Ordering information for mountings Type A – Type B – Type C – Type D – Type E

Mounting type (versions)	Order No. size						
	16	25	32	40	50	63	80
A1 *)	20408FIL	2010FIL	3010FIL	–	–	–	–
A2 *)	20464FIL	2040FIL	3040FIL	–	–	–	–
A3 *)	–	2060FIL	3060FIL	–	–	–	–
B1 *)	–	20311FIL	20313FIL	–	–	–	–
B3 *)	20465FIL	–	–	–	–	–	–
B4 *)	–	20312FIL	20314FIL	–	–	–	–
B5 *)	–	–	20976FIL	–	–	–	–
C1 *)	–	–	–	4010FIL	5010FIL	6010FIL	8010FIL
C2 *)	–	–	–	20338FIL	20349FIL	–	–
C3 *)	–	–	–	20339FIL	20350FIL	20821FIL	20822FIL
C4 *)	–	–	–	20340FIL	20351FIL	–	–
D1	20434FIL	20008FIL	20157FIL	20027FIL	20162FIL	20451FIL	20480FIL
E1	20435FIL	20009FIL	20158FIL	20028FIL	20163FIL	20452FIL	20482FIL
E2	20436FIL	20352FIL	20355FIL	20358FIL	20361FIL	–	–
E3	20437FIL	20353FIL	20356FIL	20359FIL	20362FIL	20453FIL	20819FIL
E4	–	20354FIL	20357FIL	20360FIL	20363FIL	–	–
E5	–	–	20977FIL	–	–	–	–

(* Pair

The right to introduce technical modifications is reserved

Linear Drive Accessories

Ø 25-50 mm

End Cap Mounting

correspond to FESTO dimensions HP25 – 50

for Linear Drives with Recirculating Ball Bearing Guide

- **Series OSP-P KF**

On the end-face of each end cap there are four threaded holes for mounting the actuator.

Material:

Series OSP-P KF25 – 50:
Anodized aluminium.

The mountings are supplied in pairs.

Series OSP-P KF25 to KF50: Type HP (Correspond to FESTO dimensions)

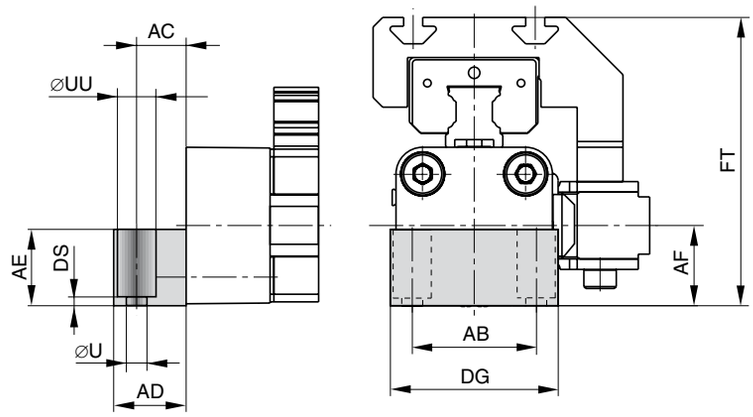

Note:
Correspond to FESTO DGPL-KF,
when the End Cap Mountings HP are mounted on the opposite side to the carriage (see drawing)

Dimension Table [mm]

Series	ØU	AB	AC	AD	AE	AF	DG	DS	FT	ØUU	Order No.
HP25	5.5	32.5	13	19	20	21	44	2	75.5	10	**21107FIL**
HP32	6.6	38	17	24	24	27	52	3	87.5	11	**21108FIL**
HP40	6.6	45	17.5	24	24	35	68	2	104.5	11	**21109FIL**
HP50	9	65	25	35	35	48	86	6	138.5	15	**21110FIL**

Linear Drive Accessories

Ø 25-50 mm

Mid-Section Support

correspond to FESTO dimensions MUP25 – 50

for Linear Drives with Recirculating Ball Bearing Guide

- **Series OSP-P KF**

For design notes, see page 73

Series OSP-P KF25: Type MUP
(Mounting over through holes)

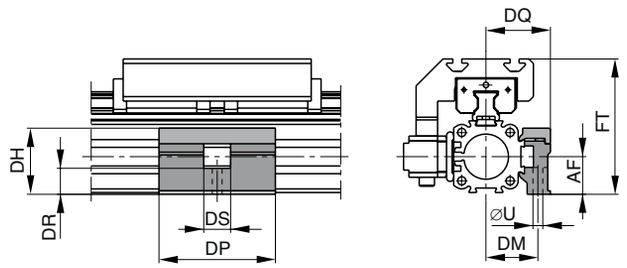

Series OSP-P KF32 to KF40: Type MUP
(Mounting over through holes)

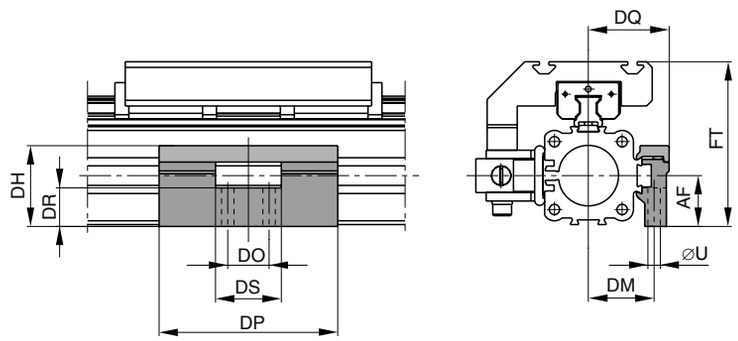

Series OSP-P KF50: Type MUP
(Mounting over through holes)

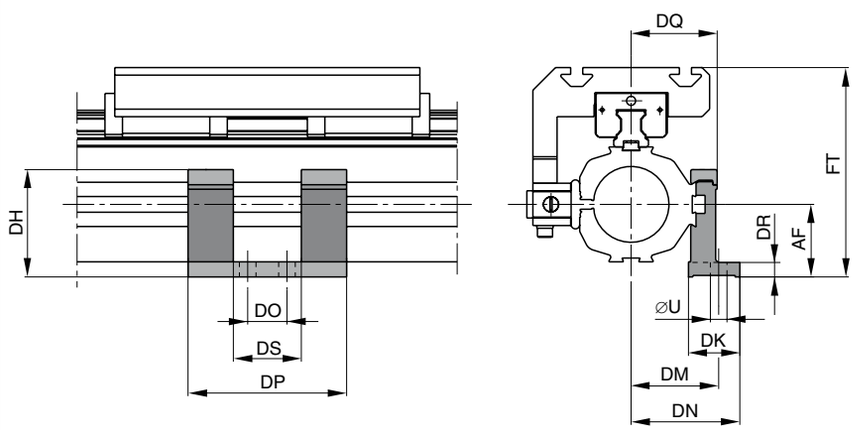

Note:
Correspond to FESTO DGPL-KF, when the Mid-Section Support MUP are mounted on the 90° side to the carriage (see drawings).

Dimension Table [mm]

Series	ØU	AF	DH	DK	DM	DN	DO	DP	DQ	DR	DS	FT	Order No.
MUP25	5.5	21	36.9	–	29	–	–	65	36	14.5	15	75.5	**21119FIL**
MUP32	6.6	27	42.9	–	35	–	22	95	43	20.5	35	87.5	**21120FIL**
MUP40	6.6	35	58	–	40	–	22	95	48	28.5	35	104.5	**21121FIL**
MUP50	11	48	71	34	58	72	26	105	57	10	45	138.5	**21122FIL**

The right to introduce technical modifications is reserved

Linear Drive Accessories

Ø 16 to 32 mm
End Cap Mounting
Type: B

for Linear Drives with Recirculating Ball Bearing Guide

- **Series OSP-P STL**
- **Series OSP-P KF**

Material:
Galvanised steel
Anodized aluminium

The mountings are supplied in pairs.

Series OSP-P STL16, STL25, STL32 : Type B1
Series OSP-P KF16, KF25, KF32 : Type B1

Installation:

Top carrier
Side piston

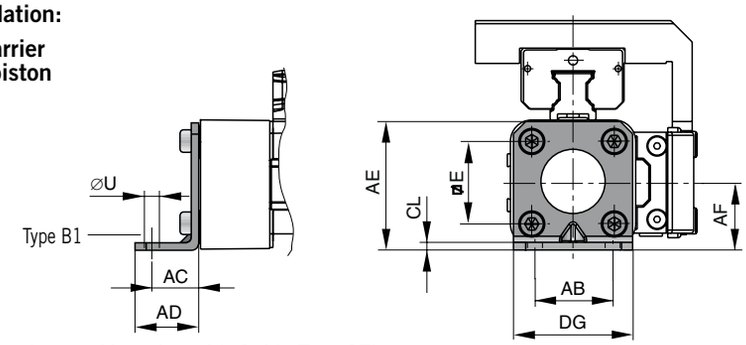

Drawing showes: Mounting with Guide Type STL

Series OSP-P STL16, STL25, STL32: Type B3 (Ø 32:B5)
Series OSP-P KF16, KF25, KF32: Type B3 (Ø 32:B5)

Installation:

Side carrier
Piston below

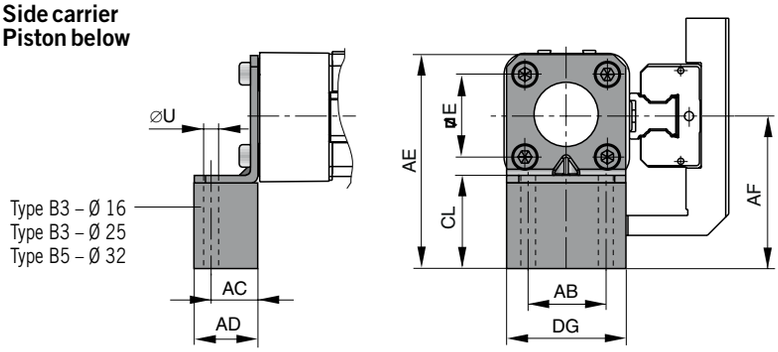

Drawing showes: Mounting with Guide Type STL

Series OSP-P STL16, STL25, STL32: Type B2
Series OSP-P KF16, KF25, KF32: Type B2

Installation:

Side carrier
Top piston

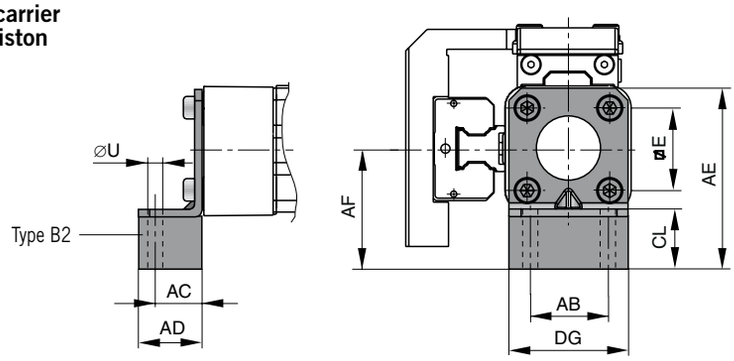

Drawing showes: Mounting with Guide Type STL

Dimension Table [mm] for End Cap Mounting Type: B1 to B5

For series	Mounting	E	ØU	AB	AC	AD	AE	AF	CL	DG	Order No. (pair)
OSP-P STL16	**B1**	18	3.6	18	10	14	28	15	2	26	**21135FIL**
OSP-P KF16	**B2**	18	3.6	18	10	14	43	30	17	26	**21136FIL**
	B3	18	3.6	18	10	14	55	42	29	26	**21137FIL**
OSP-P STL25	**B1**	27	5.8	27	16	22	42	22	2.5	39	**20311FIL**
OSP-P KF25	**B2**	27	5.8	27	16	22	57	37	17.5	39	**21138FIL**
	B3	27	5.8	27	16	22	69	49	29.5	39	**21139FIL**
OSP-P STL32	**B1**	36	6.6	36	18	26	55	30	3	50	**20313FIL**
OSP-P KF32	**B2**	36	6.6	36	18	26	69	44	17	50	**21140FIL**
	B5	36	6.6	36	18	26	90	65	9	50	**21141FIL**

Ø 40 to 50 mm End Cap Mounting Type: C

for Linear Drives with Recirculating Ball Bearing Guide

- **Series OSP-P STL**
- **Series OSP-P KF**

Material:

Anodized aluminium

The mountings are supplied in pairs.

Series OSP-P STL40, STL50: Type C1
Series OSP-P KF40, KF50: Type C1

Installation:

Top carrier
Side piston

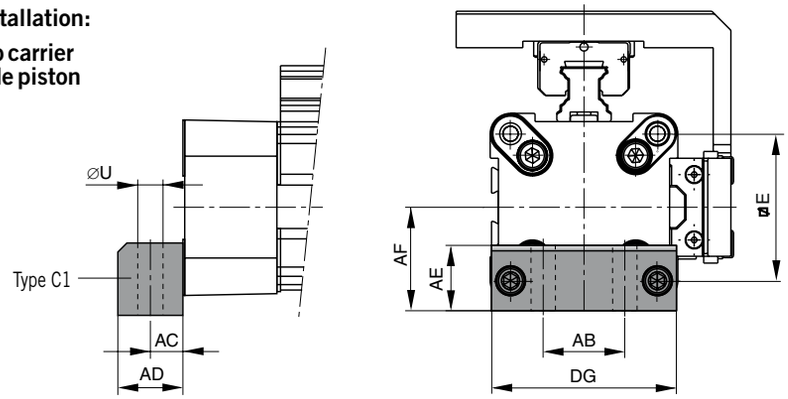

Drawing showes: Mounting with Guide Type STL

Series OSP-P STL40, STL50: Type C4 (Ø 50: C3)
Series OSP-P KF40, KF50: Type C4 (Ø 50: C3)

Installation:

Side carrier
Piston below

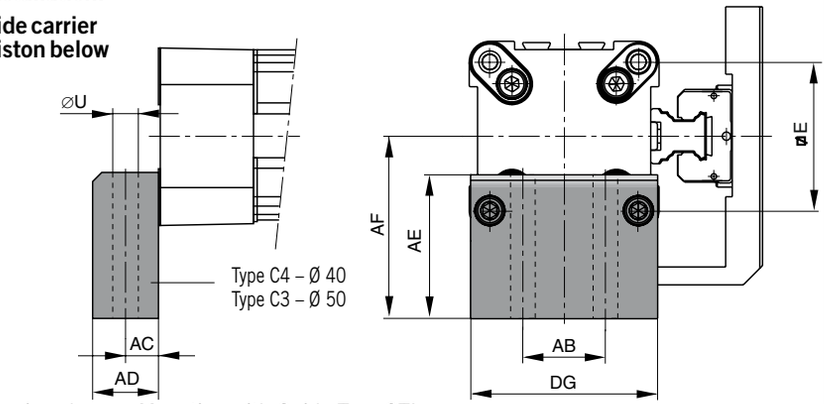

Drawing showes: Mounting with Guide Type STL

Series OSP-P STL40, STL50: Type C2
Series OSP-P KF40, KF50: Type C2

Installation:

Side carrier
Top piston

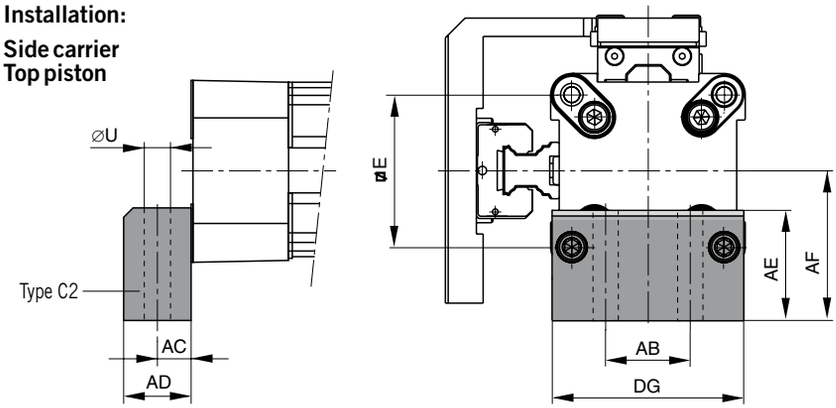

Drawing showes: Mounting with Guide Type STL

Dimension Table [mm] for End Cap Mounting Type: C1 to C4

For series	Mounting	E	ØU	AB	AC	AD	AE	AF	DG	Order No. (pair)
OSP-P STL40	C1	54	9	30	12.5	24	24	38	68	4010FIL
OSP-P KF40	C2	54	9	30	12.5	24	37	51	68	20338FIL
	C4	54	9	30	12.5	24	56	70	68	20340FIL
OSP-P STL50	C1	70	9	40	12.5	24	30	48	86	5010FIL
OSP-P KF50	C2	70	9	40	12.5	24	39	57	86	20349FIL
	C3	70	9	40	12.5	24	54	72	86	20350FIL

The right to introduce technical modifications is reserved

Linear Drive Accessories

Ø 16 to 50

Mid-Section Support Type: D1ST

for Linear Drives with Recirculating Ball Bearing Guide

- **Series OSP-P STL**
- **Series OSP-P KF**

Note on Types D1ST
The mid-section support can also be mounted on the underside of the actuator, in which case its distance from the centre of the actuator is different.

For design notes, see
page 65 (Serie OSP-P STL)
page 73 (Serie OSP-P KF)

Series OSP-P STL16 to STL50: Type D1ST
Series OSP-P KF16 to KF50: Type D1ST

Mountings from below with 2 screws

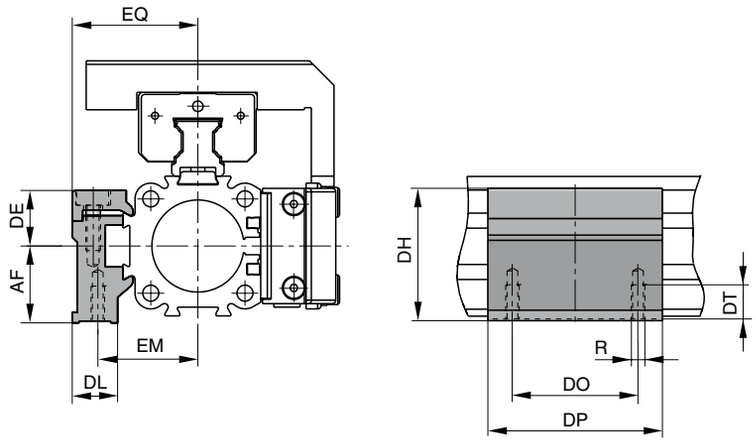

Drawing showes: Mounting with Guide Type STL

Dimension Table [mm] Mid-Section Support D1ST

For series OSP-P ..	Mounting Type	R	AF	DE	DH	DL	DO	DP	DT	EM	EQ	Order No.
STL/KF16	**D1ST**	M3	15	14.2	29.2	14.6	18	30	6.5	20	27	**21125FIL**
STL/KF25	**D1ST**	M5	22	16	38	13	36	50	10	28.5	36	**21126FIL**
STL/KF32	**D1ST**	M5	30	16	46	13	36	60	10	35.5	43	**21127FIL**
STL/KF40	**D1ST**	M6	38	23	61	19	45	60	11	38	48	**21128FIL**
STL/KF50	**D1ST**	M6	48	23	71	19	45	60	11	45	57	**21129FIL**

Order example: Type D1ST16 Order No. 21125FIL

Mid-Section Support Type: E1ST bis E5ST

for Linear Drives with Recirculating Ball Bearing Guide

- **Series OSP-P STL**
- **Series OSP-P KF**

Series OSP-P STL16 to STL50: Type E1ST
Series OSP-P KF16 to KF50: Type E1ST

Installation:
Top carrier
Side position

Mounting from above / below using a cap screw

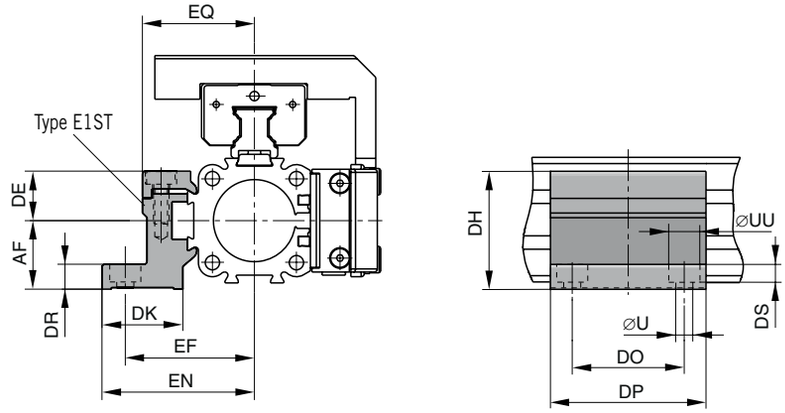

Drawing showes: Mounting with Guide Type STL

Mid-Section Support Type: E1ST to E5ST

for Linear Drives with Recirculating Ball Bearing Guide

- **Series OSP-P STL**
- **Series OSP-P KF**

Series OSP-P STL25 to STL50: Type E3ST, E4ST, E5ST
Series OSP-P STL25 to STL50: Type E3ST, E4ST, E5ST

Installation:

Side carrier
Piston below

Mounting from above / below using a cap screw

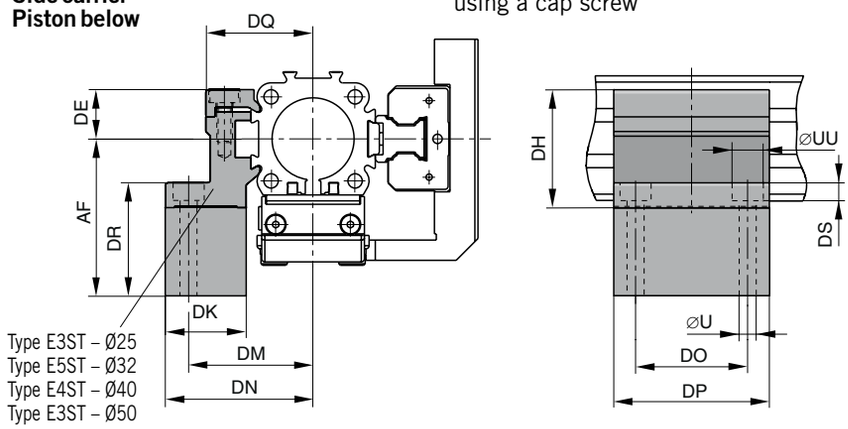

Drawing showes: Mounting with Guide Type STL

Series OSP-P STL16 to STL50: Type E2ST
Series OSP-P KF16 to KFL50: Type E2ST

Installation:

Side carrier
Top piston

Mounting from above / below using a cap screw

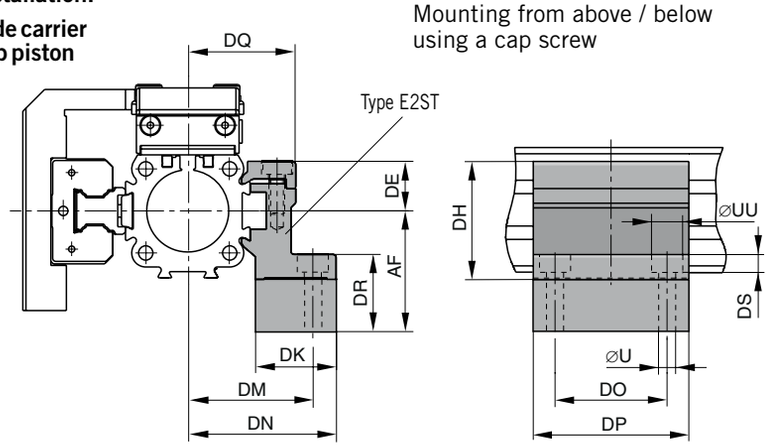

Drawing showes: Mounting with Guide Type STL

Dimension Table [mm] for Mid-Section Support E1ST to E5ST

For series OSP-P ..	Mounting Type	ØU	ØUU	AF	DE	DH	DK	DM	DN	DO	DP	DR	DQ	DS	EF	EN	EQ	Order No.
STL/KF16	**E1ST**	3.4	6	15	14.2	29.2	24	32	36.4	18	30	6	27	3.4	32	36.4	27	**21130FIL**
STL/KF16	**E2ST**	3.4	6	30	14.2	29.2	24	32	36.4	18	30	21	27	3.4	32	36.4	27	**21142FIL**
STL/KF25	**E1ST**	5.5	10	22	16	38	26	40	47.5	36	50	8	34.5	5.7	41.5	49	36	**21131FIL**
STL/KF25	**E2ST**	5.5	10	37	16	38	26	40	47.5	36	50	23	34.5	5.7	41.5	49	36	**21143FIL**
STL/KF25	**E3ST**	5.5	10	49	16	38	26	40	47.5	36	50	35	34.5	5.7	41.5	49	36	**21148FIL**
STL/KF32	**E1ST**	5.5	10	30	16	46	27	46	54.5	36	60	10	40.5	5.7	48.5	57	43	**21132FIL**
STL/KF32	**E2ST**	5.5	10	44	16	46	27	46	54.5	36	60	24	40.5	5.7	48.5	57	43	**21144FIL**
STL/KF32	**E5ST**	5.5	10	65	16	46	27	46	54.5	36	60	45	40.5	5.7	48.5	57	43	**21151FIL**
STL/KF40	**E1ST**	7	-	38	23	61	34	53	60	45	60	10	45	-	56	63	48	**21133FIL**
STL/KF40	**E2ST**	7	-	51	23	61	34	53	60	45	60	23	45	-	56	63	48	**21145FIL**
STL/KF40	**E4ST**	7	-	70	23	61	34	53	60	45	60	42	45	-	56	63	48	**21150FIL**
STL/KF50	**E1ST**	7	-	48	23	71	34	59	67	45	60	10	52	-	64	72	57	**21134FIL**
STL/KF50	**E2ST**	7	-	57	23	71	34	59	67	45	60	19	52	-	64	72	57	**21146FIL**
STL/KF50	**E3ST**	7	-	72	23	71	34	59	67	45	60	34	52	-	64	72	57	**21149FIL**

Order example: Type E1ST16 **Order No. 21130FIL**

The right to introduce technical modifications is reserved

Linear Drive Accessories

ø 16-80 mm Inversion Mounting

OSP
ORIGA SYSTEM PLUS

For Linear-drive
• Series OSP-P

In dirty environments, or where there are special space problems, inversion of the cylinder is recommended. The inversion bracket transfers the driving force to the opposite side of the cylinder. The size and position of the mounting holes are the same as on the standard cylinder.

Stainless steel version on demand.

Please note:
Other components of the OSP system such as **mid-section supports, magnetic switches** and **the external air passage for the P16,** can still be mounted on the free side of the cylinder.

Note:

When combining single end porting with inversion mountings, RS magnetic switches can only be mounted directly opposite to the external air-supply profile.

Important Note:
May be used in combination with Clevis Mounting, ref. dimensions on page 104.

Series OSP-P16 to 32

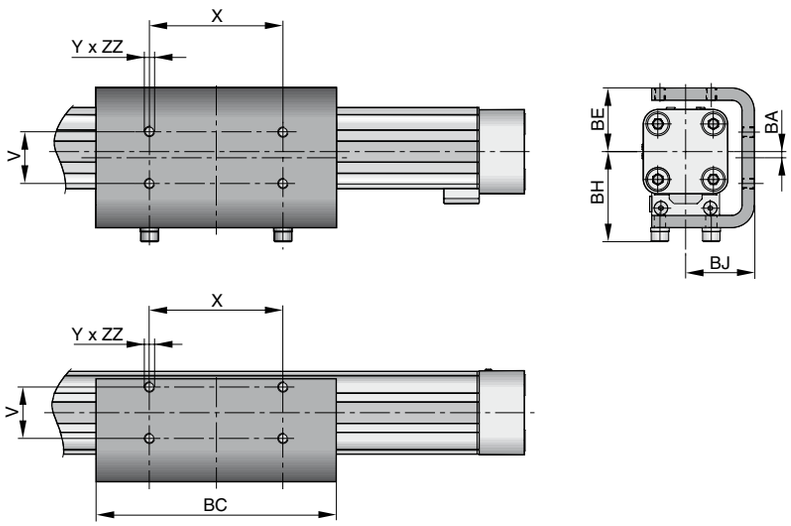

Series OSP-P40 to 80

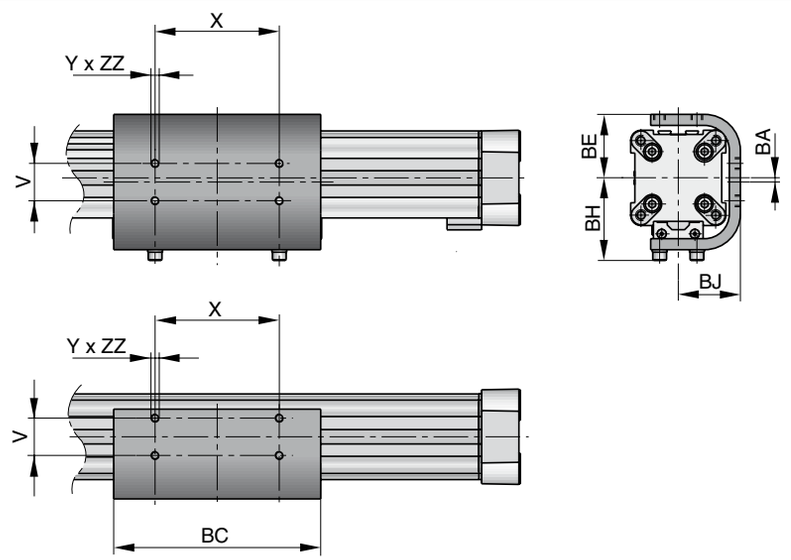

Dimension Table [mm]

For series	V	X	Y	BA	BC	BE	BH	BJ	ZZ	Order No.
OSP-P16	16,5	36	M4	2	69	23	33	25	4	**20446FIL**
OSP-P25	25	65	M5	3	117	31	44	33,5	6	**20037FIL**
OSP-P32	27	90	M6	3	150	38	52	39,5	6	**20161FIL**
OSP-P40	27	90	M6	3	150	46	60	45	8	**20039FIL**
OSP-P50	27	110	M6	1	200	55	65	52	8	**20166FIL**
OSP-P63	34	140	M8	2,5	255	68	83,5	64	10	**20459FIL**
OSP-P80	36	190	M10	3,5	347	88	107,5	82	15	**20490FIL**

Note:
Order instructions in combination with basic cylinder see page 24, pos. 20

For **rodless pneumatic cylinder OSP-P** overwiew see page 9-13

The right to introduce technical modifications is reserved

Linear Drive Accessories

ø 16-50 mm
Adaptor Profile

OSP
ORIGA SYSTEM PLUS

For Linear-drive
- **Series OSP-P**

Adaptor Profile OSP
- A universal attachment for mounting of valves etc.
- Solid material

Series OSP-P16 to 50

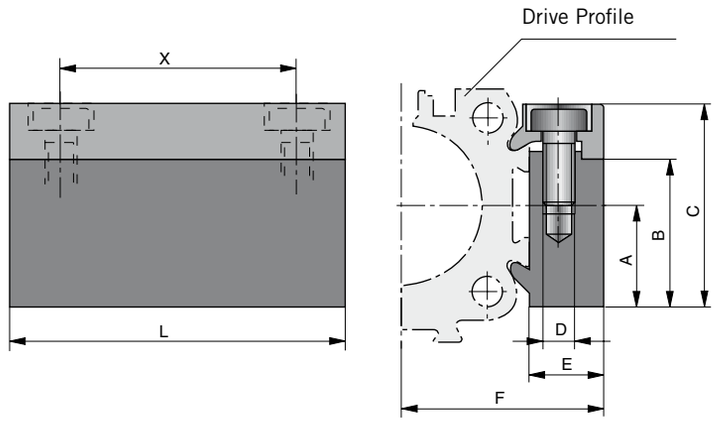

Dimension Table [mm]

For series	A	B	C	D	E	F	L	X	Order No.	
									Standard	Stainless
OSP-P16	14	20.5	28	M3	12	27	50	38	**20432FIL**	**20438FIL**
OSP-P25	16	23	32	M5	10.5	30.5	50	36	**20006FIL**	**20186FIL**
OSP-P32	16	23	32	M5	10.5	36.5	50	36	**20006FIL**	**20186FIL**
OSP-P40	20	33	43	M6	14	45	80	65	**20025FIL**	**20267FIL**
OSP-P50	20	33	43	M6	14	52	80	65	**20025FIL**	**20267FIL**

Series OSP-P63 to 80

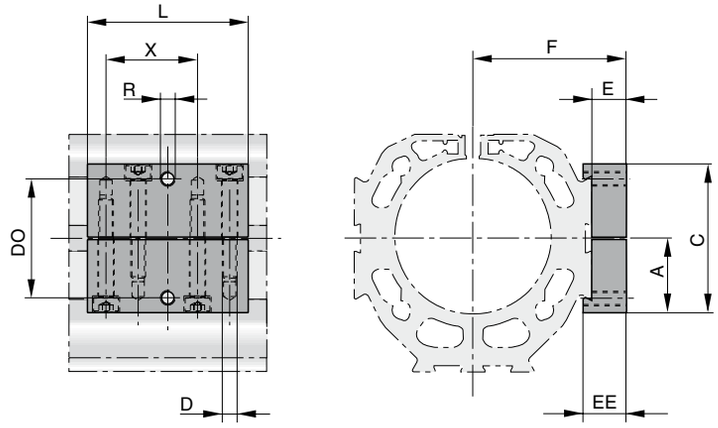

Dimension Table [mm]

For series	A	C	D	E	F	L	R	X	EE	DO	Order No.*
OSP-P63	30	60	M6	14	62	65	M6	37	17,5	48	**20792ZFIL**
OSP-P80	30	60	M6	14	75	65	M6	37	17,5	48	**20792ZFIL**

* Stainless version

For **rodless pneumatic cylinder OSP-P** overview see page 9-13

Linear Drive Accessories

ø 16-50 mm
T-Slot Profile

Dimensions

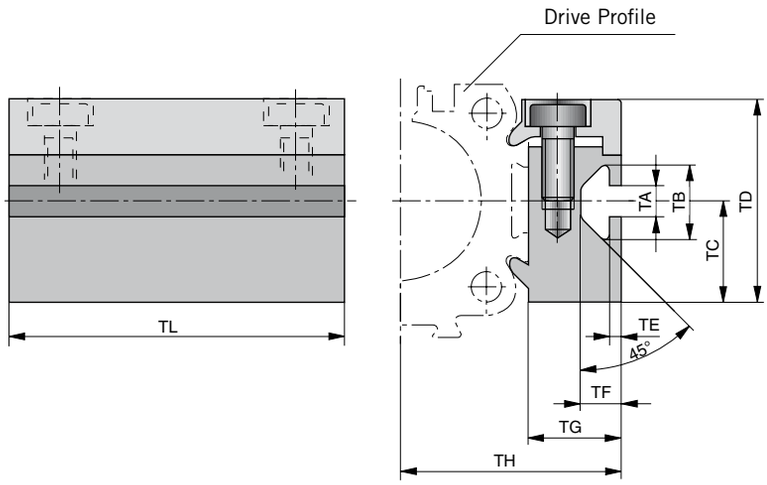

OSP
ORIGA
SYSTEM
PLUS

For Linear-drive
- **Series OSP-P**

T-Slot Profile OSP

- A universal attachment for mounting with standard T-Nuts

Dimension Table [mm]

For series	TA	TB	TC	TD	TE	TF	TG	TH	TL	Order No. Standard	Order No. Stainless
OSP-P16	5	11.5	14	28	1.8	6.4	12	27	50	**20433FIL**	**20439FIL**
OSP-P25	5	11.5	16	32	1.8	6.4	14.5	34.5	50	**20007FIL**	**20187FIL**
OSP-P32	5	11.5	16	32	1.8	6.4	14.5	40.5	50	**20007FIL**	**20187FIL**
OSP-P40	8.2	20	20	43	4.5	12.3	20	51	80	**20026FIL**	**20268FIL**
OSP-P50	8.2	20	20	43	4.5	12.3	20	58	80	**20026FIL**	**20268FIL**

Following T-nuts from the company ITEM could be used:

Cyl.-Series	T-nut St 5	T-nut St 8
OSP-P16-32	●	
OSP-P40-50		●

For **rodless pneumatic cylinder OSP-P** overview see page 9-13

The right to introduce technical modifications is reserved

Linear Drive Accessories

ø 16-50 mm
Connection Profile

OSP
ORIGA SYSTEM PLUS

For combining
- **Series OSP-P with system profiles**
- **Series OSP-P with Series OSP-P**

Dimensions

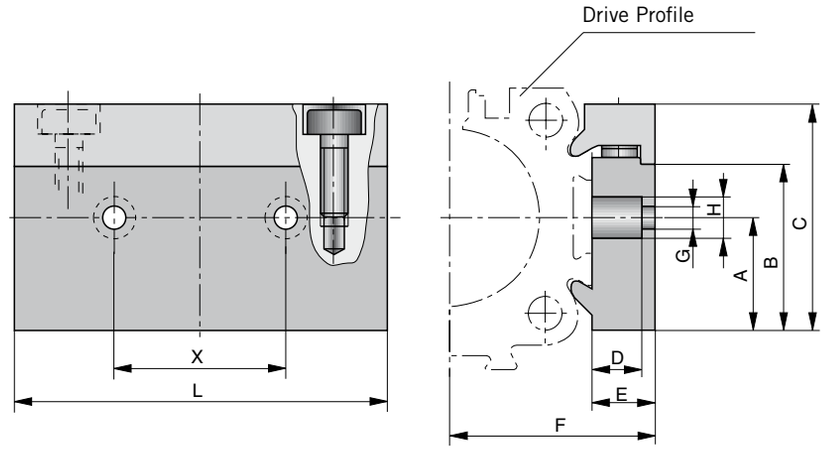

Dimension Table [mm]

For series	for mounting on the carrier of	A	B	C	D	E	F	G	H	L	X	Order No.
OSP-P16	OSP25	14	20.5	28	8.5	12	27	5.5	10	50	25	**20849FIL**
OSP-P25	OSP32-50	16	23	32	8.5	10.5	30.5	6.6	11	60	27	**20850FIL**
OSP-P32	OSP32-50	16	23	32	8.5	10.5	36.5	6.6	11	60	27	**20850FIL**
OSP-P40	OSP32-50	20	33	43	8	14	45	6.6	11	60	27	**20851FIL**
OSP-P50	OSP32-50	20	33	43	8	14	52	6.6	11	60	27	**20851FIL**

Possible Combinations

Combination of Series OSP-P with system profiles

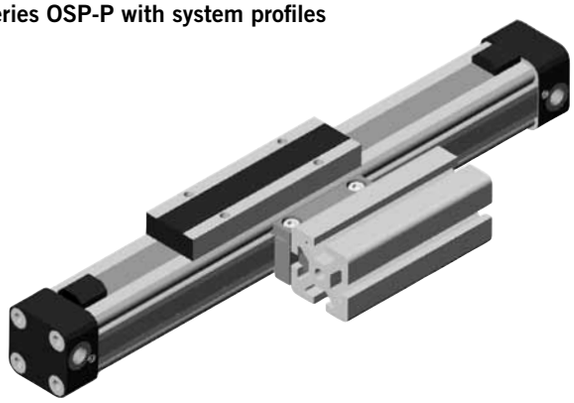

Combination of Series OSP-P with Series OSP-P

For **rodless pneumatic cylinder OSP-P** overview see page 9-13

Linear Drive Accessories

ø 25-50 mm
Duplex Connection

OSP
ORIGA SYSTEM PLUS

For connection of cylinders of the Series OSP-P

The duplex connection combines two OSP-P cylinders of the same size into a compact unit with high performance.

Features
- increased load and torque capacity
- higher driving forces

Included in delivery:
2 clamping profiles with screws
1 mounting plate with fixings

Dimensions

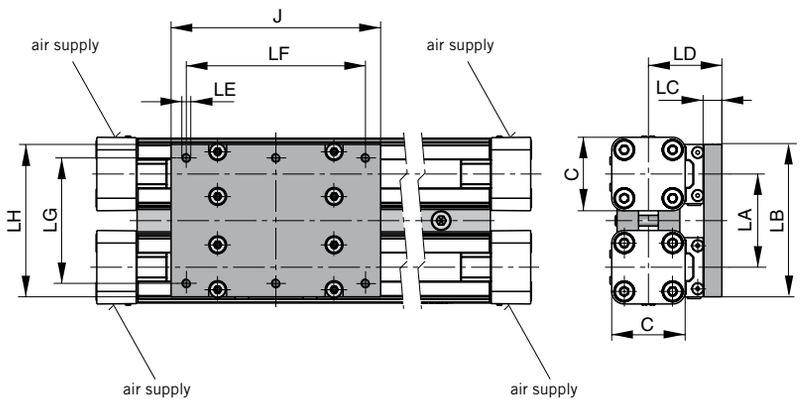

Dimension Table [mm]

For series	C	J	LA	LB	LC	LD	LE	LF	LG	LH	Order No. Standard	Order No. Stainless
OSP-P25	41	117	52	86	10	41	M5	100	70	85	**20153FIL**	**20194FIL**
OSP-P32	52	152	64	101	12	50	M6	130	80	100	**20290FIL**	**20291FIL**
OSP-P40	69	152	74	111	12	56	M6	130	90	110	**20156FIL**	**20276FIL**
OSP-P50	87	200	88	125	12	61	M6	180	100	124	**20292FIL**	**20293FIL**

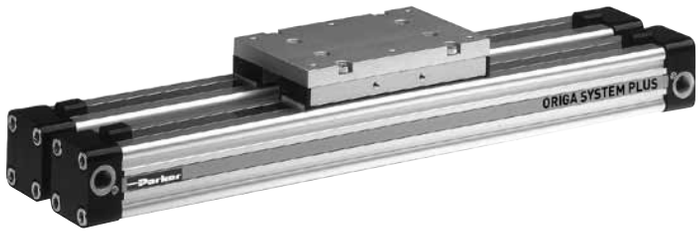

Note:
Order instructions in combination with basic cylinder see page 24, pos. 20

For **rodless cylinders OSP-P** overview see page 9-13

The right to introduce technical modifications is reserved

Linear Drive Accessories

ø 25-50 mm
Multiplex Connection

OSP
ORIGA
SYSTEM
PLUS

For connection of cylinders of the Series OSP-P

The multiplex connection combines two or more OSP-P cylinders of the same size into on unit.

Features
- The orientation of the carriers can be freely selected

Included in delivery:
2 clamping profiles with clamping screws

Dimensions

Installation:
Top carrier/Top carrier

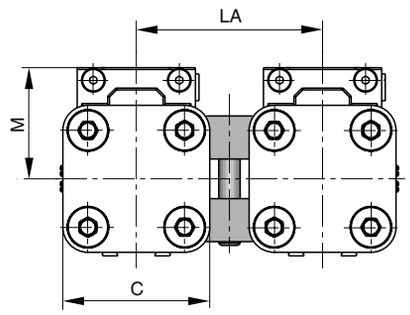

Installation:
Top carrier/Side carrier

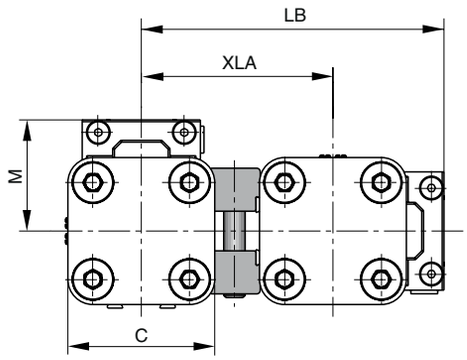

Dimension Table [mm]

For series	C	M	LA	LB	XLA	Order No. Standard	Order No. Stainless
OSP-P25	41	31	52	84.5	53.5	**20035FIL**	**20193FIL**
OSP-P32	52	38	64	104.5	66.5	**20167FIL**	**20265FIL**
OSP-P40	69	44	74	121.5	77.5	**20036FIL**	**20275FIL**
OSP-P50	87	49	88	142.5	93.5	**20168FIL**	**20283FIL**

For **rodless cylinders OSP-P** overview see page 9-13

Linear Drive Accessories

ø 16-80 mm Magnetic Switches

OSP
ORIGA SYSTEM PLUS

For electrical sensing of the carrier position, e.g. at the end positions, magnetic switches may be fitted. Position sensing is contactless and is based on magnets fitted as standard to the carrier. A yellow LED indicates operating status.

Piston, speed and switching distance affect signal duration and should be considered in conjunction with the minimum reaction time of ancillary control equipment.

$$\text{Min. reaction time} = \frac{\text{Switching distance}}{\text{Piston speed}}$$

Characteristics

Characteristics	Unit	Description	
Electrical Characteristics		**Type RS**	**Type ES**
Switching ouput		Reed	PNP, NPN
Operating voltage	V	10-240 AC/DC (NO) 10-150 AC/DC (NC)	10-30 DC
Residual voltage	V	< 3	< 3
Connection		Two wire	Three wire
Output function		normally open normally closed	normally open
Permanent current	mA	200	200
Max. switching capacity	VA (W)	10 VA	—
Power consumption without load	mA	—	< 20
Function indicator		LED, yellow	
Typical switching time	ms	On: < 2	On: < 2
Switch-off delay	ms	—	ca. 25
Pole reversal does not work		LED	—
Pole reversal protection		—	Built in
Short-circuit protection		—	Built in
Switchable capacity load	µF	0.1 at 100 Ω, 24 VDC	
Switching point accuracy	mm	± 0.2	
Switching distance	mm	ca. 15	ca. 15
Hysteresis for OSP	mm	ca. 8	ca. 3
Lifetime		3×10^6, up to 6×10^6 cycles	Theoretically unlimited
Mechanical Characteristics			
Housing		Makrolon, smoke color	
Cable cross section	mm^2	2 x 0.14	3 x 0.14
Cable type *)		PVC	PUR, black
Bending radius fixed	mm	≥20	
moving	mm	≥70	
Weight (Mass)	kg	0.012	
Degree of protection	IP	67 to DIN EN 60529	
Ambient temperature range *)[1]	°C °C	-25 other temperature ranges +80 on request	
Shock resistance	m/s^2	100 (contact switches)	500

*) other versions on request
[1] for the magnetic switch temperature range, please take into account the surface temperature and the self-heating properties of the linear drive.

For **linear drives** overview see from page 9

The right to introduce technical modifications is reserved

Type RS

In the type RS contact is made by a mechanical **reed switch** encapsulated in glass.
Direct connection with 2-pole cable, 5 m long, open ended **(Type RS-K).**

Type ES

In the type ES contact is made by an **electronic switch** – without bounce or wear and protected from pole reversal. The output is short circuit proof and insensitive to shocks and vibrations. Connection is by 3-pole connector for easy disconnection. Fitted with connection cable 100 mm long with connector.
A 5 m cable with connector and open end can be ordered separatly, or use the Order No. for the complete Type ES with 5 m cable.

Magnetic Switches RS and ES

Electrical Service Life
Protective Measures
Magnetic switches are sensitive to excessive currents and inductions. With high switching frequencies and inductive loads such as relays, solenoid valves or lifting magnets, service life will be greatly reduced.

With **resistive and capacitative loads** with high switch-on current, such as light bulbs, a protective resistor should be fitted. This also applies to long cable lengths and voltages over 100 V.

In the switching of inductive loads such as relays, solenoid valves and lifting magnets, voltage peaks (transients) are generated which must be suppressed by protective diodes, RC loops or varistors.

Connection Examples
Load with protective circuits
(a) Protective resistor for light bulb
(b) Freewheel diode on inductivity
(c) Varistor on inductivity
(d) RC element on inductivity

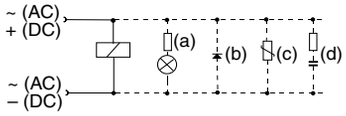

For the type ES, external protective circuits are not normally needed.

Electrical Connection, Type RS

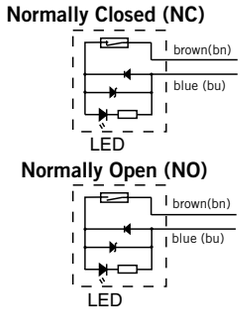

Dimensions [mm] – Type RS-K

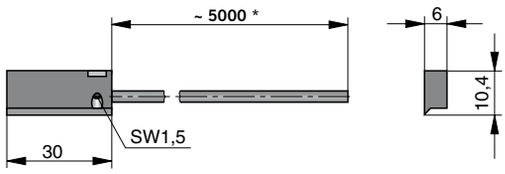

* Length with possible minus tolerance, see chart below

Electrical Connection, Type ES

Standard Version:
Type PNP

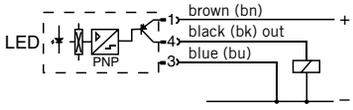

Optional Version
Type NPN

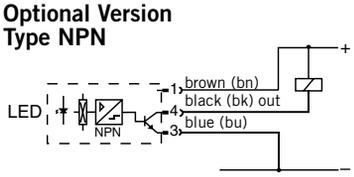

Dimensions [mm] – Type ES-S

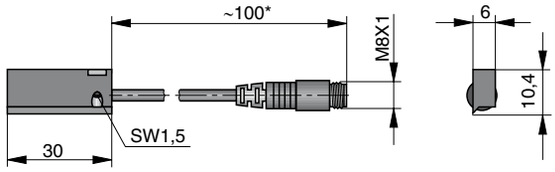

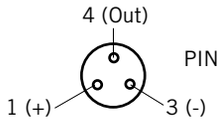

PIN assignment (view of pins) according to DIN EN 50044

* Length with possible minus tolerance, see chart below

Length of connection cable with length tolerance

Magnetic Switch Order No.	Nominal cable length	Length tolerance
KL3045FIL	5000 mm	– 50 mm
KL3048	5000 mm	– 50 mm
KL3054FIL	100 mm	– 20 mm
KL3060FIL	145 mm	± 5 mm

Dimensions Series OSP-P16 to 80 *

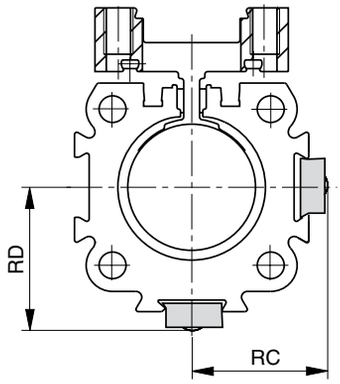

Serie	Dimensions [mm]	
	RC	RD
OSP-P16	20	20,5
OSP-P25	25	27
OSP-P32	31	34
OSP-P40	36	39
OSP-P50	43	48
OSP-P63	53	59
OSP-P80	66	72

Order Instructions

Series	Order No.					
	RS Closer Normaly open	**RS Opener** Normaly closed	**ES**		**ES** complete with 5 m cable	
			PNP	**NPN**	**PNP**	**NPN**
OSP-P16 up to OSP-80 *	**Type: RS-K KL3045FIL**	**Type: RS-K KL3048**	**Type: ES-S KL3054FIL**	**Type: ES-S KL3060FIL**	**Type: ES-S 10750FIL**	**Type: ES-S 10751FIL**
Cable 5 m with connector and with open end for magnetic switches Type ES-S			**4041FIL**			

* **Note**: magnetic switches for OSP-P10 see from page 127

The right to introduce technical modifications is reserved

Linear Drive Accessories

ø 16-80 mm
Cable Cover

For clean guidance of magnetic switch cables along the cylinder body.
Contains a maximum of 3 cables with diameter 3 mm.
Material: Plastic
Temperature Range: –10 to +80 °C

Dimensions [mm]

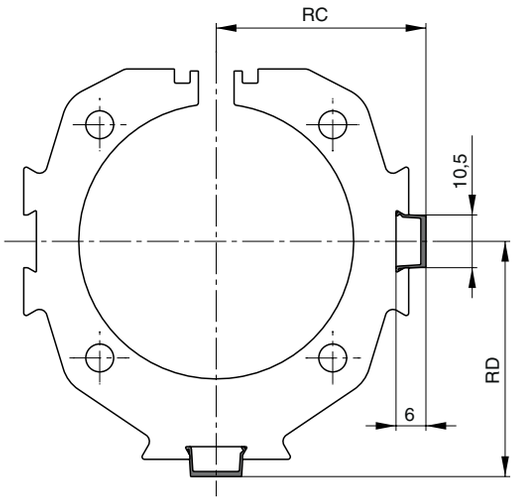

Dimension Table [mm] and Order Instructions

Series	Dimensions [mm] RC	RD	Order No.
OSP-P16	18.5	19	**13039FIL**
OSP-P25	23.5	25.5	Minimal length: 1 m Max. profile length: 2 m Multiple profiles can be used.
OSP-P32	29.5	32	
OSP-P40	34.5	37.5	
OSP-P50	41.5	46.5	
OSP-P63	51.5	57.5	
OSP-P80	64.5	70.5	

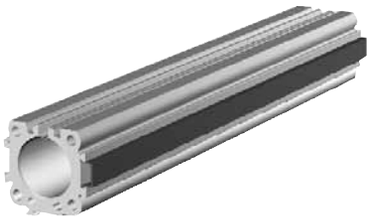

Linear Drive Accessories

Ø 10 – 80 mm

Magnetic Switches

Characteristics		Series P8S-GR P8S-GE	Series P8S-GP
Characteristics	Unit	Description	
Electrical Characteristics			
Switching output / -function		Reed / NO Reed / NC	PNP / NO
Electrical configuration		2-wire	3-wire
Display LED yellow		yes (not Reed NC)	
Operating voltage Ub	V	10 - 30 AC/DC	10 - 30 DC
Ripple of Ub	%	≤ 10	≤ 10
Voltage drop	V	≤ 3	≤ 2
Power consumption @ Ub = 24 V switched on, without load	mA	-	≤ 10
Permanent current	mA	≤ 500	≤ 200
Breaking capacity	W	≤ 6	-
Switchable capacity load @ 100 W @ 24 V DC	nF	100	-
Switching frequency	Hz	≤ 400	≤ 1,000
Time delay before availability (on/ off)	ms	1.5 / 0.5	0.5 / 0.5
Repeatability	mm	≤ 0.2	≤ 0.2
Switching distance	mm	approx. 15	approx. 15
Hysteresis	mm	2	2
EMC following EN 60947-5-2		yes	yes
Lifetime		≥ 20 x 10^6 cycles	unlimited
Short-circuit protection		-	yes
Reverse polarity prot.		-	yes
Power-up pulse suppression		-	yes
Protection for inductive load		-	yes
ATEX -Certification		-	on request
Mechanical Characteristics			
Housing		PA12	
Cable type		PUR / black	
Cable cross section	mm²	2 x 0.14	3 x 0.14
Bending radius fixed	mm	≥ 30	
Bending radius moving	mm	≥ 45	
Ambient			
Protection class to EN 60529	IP	68	
Ambient temperature range 1)	°C	- 30 to + 80	
Vibration to EN 60068-2-6	G	30, 11 ms, 10 to 55 Hz, 1 mm	
Shock to EN 60068-2-27	G	50, 11 ms	

[1)] for the magnetic switch temperature range, please take into account the surface temperature and the self-heating properties of the linear drive.

OSP
ORIGA SYSTEM PLUS

Typ RST
EST

The next generation of T-slot switches is appealing due to its ease of attachment without the use of special tools. Due to the new electronics, the hysteresis is especially narrow, allowing for a highly accurate switching point.

Magnetic switches are used for electrical sensing of the position of the piston, e.g. at its end positions. They can also be used for sensing of intermediate positions.

Sensing is contactless, based on magnets which are built-in as standard. A yellow LED indicates operating status.

The magnetic switches are attached with an adapter directly in the dovetail groove of the OSP cylinder.
For the Basic Guide BG, the magnetic switches are attached directly in the T-slot.

The possible operating speed of the load carrier or carrier bolt must account for the minimum response time of downstream devices. Accordingly, the switching distance is included in the calculation.

$$\text{Minimum response time} = \frac{\text{Switching distance}}{\text{Overrun speed}}$$

For linear drives see overview see page 9-13

The right to introduce technical modifications is reserved

Type RST

In the type RST contact is made by a mechanical **reed switch** encapsulated in glass.

Type EST

In the type EST contact is made by an **electronic switch** – without bounce or wear and protected from pole reversal. The output is short circuit proof and insensitive to shocks and vibrations.

A cable with connector and open end can be ordered separately.

Magnetic Switches RST and EST

Electrical Service Life, Protective Measures
Magnetic switches are sensitive to excessive currents and inductions. With high switching frequencies and inductive loads such as relays, solenoid valves or lifting magnets, service life will be greatly reduced.

With **resistive and capacitative loads** with high switch-on current, such as light bulbs, a protective resistor should be fitted. This also applies to long cable lengths.

In the switching of inductive loads such as relays, solenoid valves and lifting magnets, voltage peaks (transients) are generated which must be suppressed by protective diodes, RC loops or varistors.

Connection Examples
Load with protective circuits
(a) Protective resistor for light bulb
(b) Freewheel diode on inductivity
(c) Varistor on inductivity
(d) RC element on inductivity

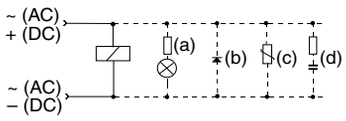

For the type EST, external protective circuits are not normally needed.

Electrical Connection: cable Type RST-K

Reed 2-wire

Normally open

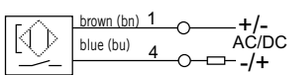

Normally closed

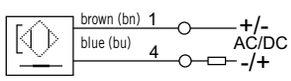

Electrical Connection: cable Type EST-K

PNP 3-wire

Normally open

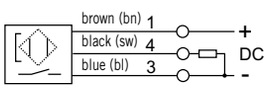

Electrical Connection: plug Type RST-S

Reed 2-wire

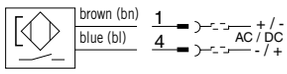

Type EST-S

PNP 3-wire

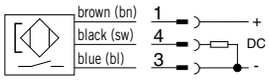

Dimensions [mm] - Typ RST-K, EST-K - Series P8S

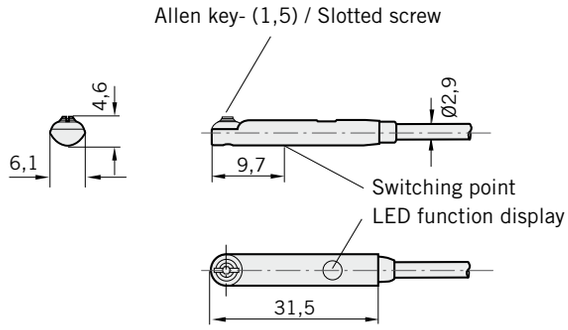

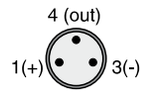

PIN assignment
(view of pins)
to DIN EN 50044

P8S- cable with open end

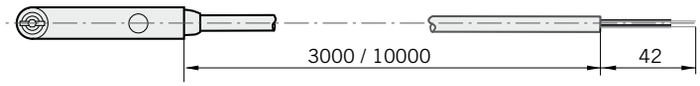

P8S- M8 Snap in connector

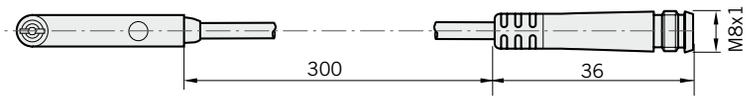

P8S- M8 screw connectorr

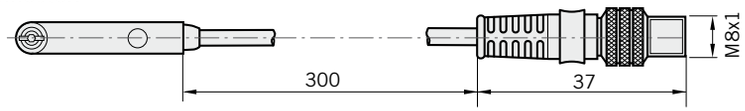

Installation instructions for the RST/EST magnetic switches series P8S

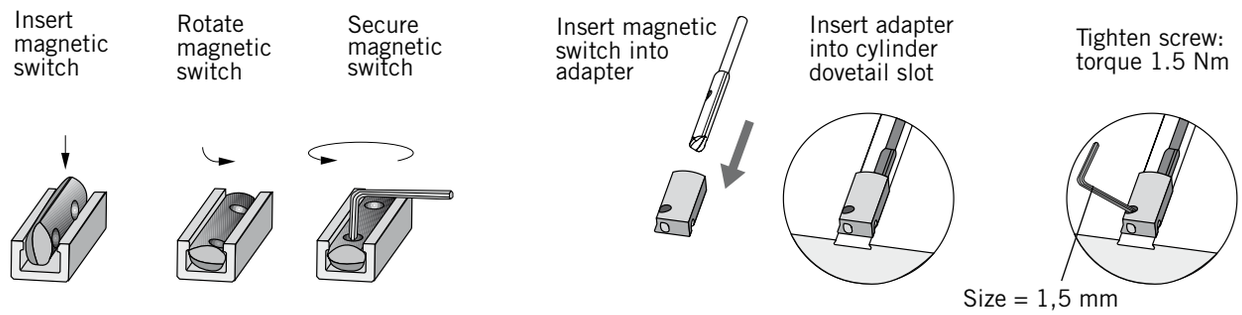

Dimensions adapters for RST/EST magnetic switch series P8S

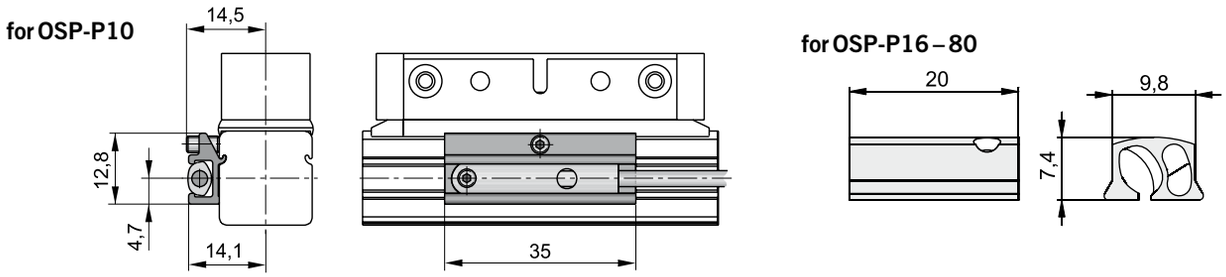

Note for OSP-P10: Switches can not be mounted directly opposite of the carrier !

P8S mounting positions in the Basic Guide cylinder profile

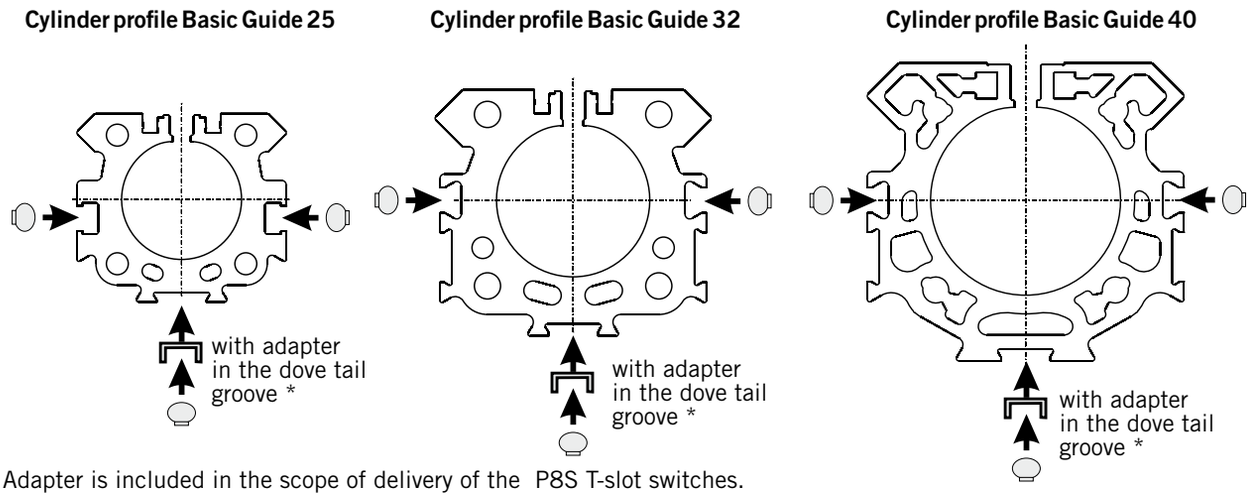

* Adapter is included in the scope of delivery of the P8S T-slot switches.

Dimensions for P8S T-Slot magnetic switches with adapter in the cylinder profile of the Basic Guide 25-40

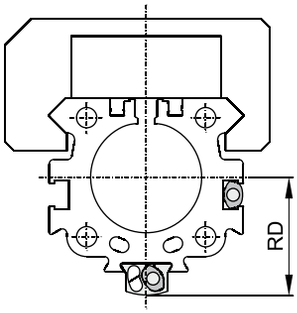

Series	Dimension [mm] RD
OSPP-BG25	27
OSPP-BG32	33,5
OSPP-BG40	39

The right to introduce technical modifications is reserved

Order Instructions			
Version	Voltage	**Type**	**Order No.**
Magnetic switch, reed contact, normally open, LED indicator, cable 3 m	10-30 V AC / DC	**RST-K**	**P8S-GRFAX**
Magnetic switch, reed contact, normally open, LED indicator, cable 10 m	10-30 V AC / DC	**RST-K**	**P8S-GRFDX**
Magnetic switch, reed contact, normally open, snap connector M8, LED indicator, cable 0.3 m	10-30 V AC / DC	**RST-S**	**P8S-GRSHX**
Magnetic switch, reed contact, normally open, screw connector M8, LED indicator, cable 0.3 m	10-30 V AC / DC	**RST-S**	**P8S-GRCHX**
Magnetic switch, reed contact, normally closed, cable 10 m	10-30 V AC / DC	**RST-K**	**P8S-GEFRX**
Magnetic switch, electronic, PNP LED indicator, cable 3 m	10-30 V DC	**EST-K**	**P8S-GPFAX**
Magnetic switch, electronic, PNP LED indicator, cable 10 m	10-30 V DC	**EST-K**	**P8S-GPFDX**
Magnetic switch, electronic, PNP snap connector M8, LED indicator, cable 0.3 m	10-30 V DC	**EST-S**	**P8S-GPSHX**
Magnetic switch, electronic, PNP screw connector M8, LED indicator, cable 0.3 m	10-30 V DC	**EST-S**	**P8S-GPCHX**

Included in delivery: 1 magnetic switch, 1 adapter for T-slot magnetic switch for type OSP-P16 up to OSP-P80.
Note: When using T-nut magnetic switches with the OSP-P10,
please order the adapter Order No. 8872FIL separately.

Accessories		
Description	**Type**	**Order No.**
Cable M8, 2.5 m without lock nut	**KS 25**	**KY 3240**
Cable M8, 5.0 m without lock nut	**KS 50**	**KY 3241**
Cable M8, 10.0 m without lock nut	**KS 100**	**KC 3140**
Cable M8, 2.5 m with lock nut	**KSG 25**	**KC 3102**
Cable M8, 5.0 m with lock nut	**KSG 50**	**KC 3104**
Adapter for RST/EST magnetic switch – for type OSP-P10	**HMTP010**	**8872FIL**
Adapter for RST/EST magnetic switch – for type OSP-P16 up to OSP-P80 (pack of 10)		**KL 3333**

Components for EX-Areas

OSP
ORIGA SYSTEM PLUS

Magnetic Switches ø 10 – 80 mm

Series: RS-K..ATEX
ES-K..ATEX

For electrical sensing of the carrier position, e.g. at the end positions, magnetic switches may be fitted. Position sensing is contactless and is based on magnets fitted as standard to the carrier. A yellow LED indicates operating status.

The universal magnetic switches are suitable for all Parker Origa OSP-Actuators and aluminum profile rod type cylinders.

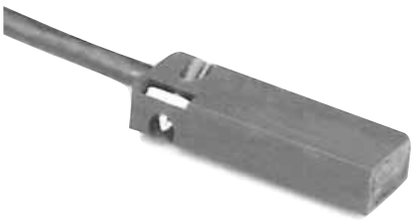

Characteristics

Characteristics	Unit	Description	
Elektrical Characteristics		**Type RS-K ATEX**	**Type ES-K ATEX**
ATEX Certification		yes	yes
Category Type: RS-K		Ex II 3GD EEX nC IIC T3 146 °C	
Category Type: ES-K		Ex II 2GD EEX ib IIC T5 100 °C	
Switching output		Reed	NAMUR
Operating voltage	V	10-240 AC/DC	7-10 DC
Voltage drop	V	≤3	–
Electrical configuration		Two wire	Two wire
Output function		normally open	normally open
Permanent current	mA	≤ 200	≤ 3
Power consumption	W/VA	≤ 10/10 peak	–
Peak current	mA	≤ 500	–
Power consumption without load	mA	–	≤ 1
Function indicator		LED, yellow	
Response time On/Out	ms	≤2	≤0.5
Sensitivity	mT	2-4	2-4
Reverse polarity prot.		yes	yes
Short-circuit protection		no	yes
Repeatability	mm	≤0.2	≤0.2
Hysteresis	mm	≤1.5	≤1.5
EMC	EN	60947-5-2	
Lifetime		≥10 Mio. Cycles with PLC load	
Mechanical Characteristics			
Housing		Makrolon, smoke color	
Cable cross section	mm^2	2 x 0.14	2 x 0.14
Cable type		PVC, blau	PVC, blue
Weight	kg	ca. 0.075	
Degree of protection	IP	67 to EN 60529	
Ambient temperature range [1]	°C °C	-25 +80	-20 +75
Surface temperature	°C	The maximum surface temperature T=146°C is reffered to the max. ambiente temperature of 80°C	–
Shock resistance			
Vibration and Shock		50 G at 50 Hz and 1 mm	

[1] for the magnetic switch temperature range, please take into account the surface temperature and the self-heating properties of the linear drive.

For **Linear Drives in ATEX-Version** see page 35-36

The right to introduce technical modifications is reserved

Magnetic Switches Type RS-K ATEX-Version

In the type RS contact is made by a mechanical **reed switch** encapsulated in glass.

ATEX-Category Type: RS-K

Ⓔx II 3GD EEX nC IIC T3 146°C

Electrical Service Life
Protective Measures
Magnetic switches are sensitive to excessive currents and inductions. With high switching frequencies and inductive loads such as relays, solenoid valves or lifting magnets, service life will be greatly reduced.

With **resistive and capacitative loads** with high switch-on current, such as light bulbs, a protective resistor should be fitted. This also applies to long cable lengths.

In the switching of inductive loads such as relays, solenoid valves and lifting magnets, voltage peaks (transients) are generated which must be suppressed by protective diodes, RC loops or varistors.

Connection Examples
Load with protective circuits
(a) Protective resistor for light bulb
(b) Freewheel diode on inductivity
(c) Varistor on inductivity
(d) RC element on inductivity

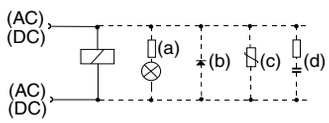

Magnetic Switches Type ES-K ATEX-Version

In the type ES contact is made by an **electronic switch** – without bounce or wear and protected from pole reversal. The output is short circuit proof and insensitive to shocks and vibrations.

ATEX-Category Type: ES-K

Ⓔx II 2GD EEX ib IIC T5 100°C

Note!

The connection of the magnetic switch Type ES-K ATEX must be realised by means of an EEX i switching amplifier (see Accessories).

Electrical Connection: cable Type RS-K ATEX

Normally open (Reed)
2-wire

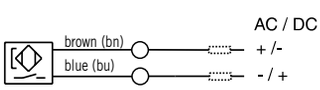

Electrical Connection: cable Type ES-K ATEX

Normally open (NAMUR)
2-wire

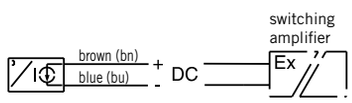

Dimensions [mm]

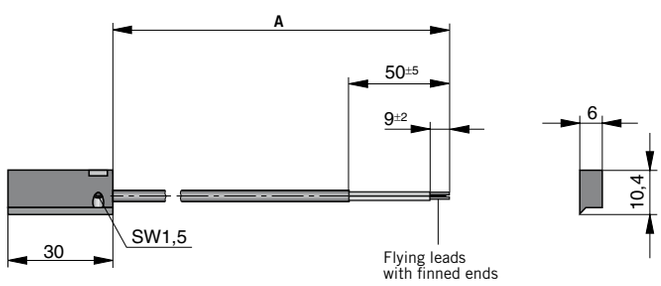

Dimension Table [mm]

Magnetic switch Order No.	Nominal cable length A	Lengths tolerance
KL3240	5000	- 50
KL3241	10000	- 50
KL3250	5000	- 50
KL3251	10000	- 50

Order Instructions			
Version	Voltage	**Type**	**Order No.**
Magnetic switch, reed contact, normally open LED indicator, cable 5 m	10-240 V AC/DC	**RS-K ATEX**	**KL3240**
Magnetic switch, reed contact, normally open LED indicator, cable 10 m	10-240 V AC/DC	**RS-K ATEX**	**KL3241**
Magnetic switch, electronic, NAMUR, normally open LED indicator, cable 5 m	7-10 V DC	**ES-K ATEX**	**KL3250**
Magnetic switch, electronic, NAMUR, normally open LED indicator, cable 10 m	7-10 V DC	**ES-K ATEX**	**KL3251**

Accessories

Description	**for magnetic switch**	**Order No.**
2 channel switching amplifier 24 V DC	**ES-K ATEX**	**2876FIL**
2 channel switching amplifier 220 V AC	**ES-K ATEX**	**1546FIL**

Note: 2 magnetic switches can be connected to each switching amplifier.

The right to introduce technical modifications is reserved

ORIGA-SENSOFLEX
Displacement Measuring System for Cylinder Series OSP-P

Contents

Description	Page
Overview	136
Technical Data SFI-plus	137-138
Dimensions SFI-plus	138
Order Instructions SFI-plus	139

The right to introduce technical modifications is reserved

ORIGA-Sensoflex

Displacement measuring system for automated movement

Series SFI-plus

(incremental measuring system)

for cylinder series

- **OSP-P..**

Characteristics

- Contactless magnetic displacement measurement system
- Displacement length up to 32 m
- Resolution 0.1 mm (option: 1 mm)
- Displacement speed up to 10 m/s
- For linear and non-linear rotary motion
- Suitable for almost any control or display unit with a counter input

For further specifications, see page 138

The SFI-plus magnetic displacement measuring system consists of 2 main components.

- **Measuring Scale**
  Self-adhesive magnetic measuring scale
- **Sensing Head**
  Converts the magnetic poles into electrical signals which are then processed by counter inputs downstream
  (e.g. PLC, PC, digital counter)

Displacement measuring system

for automated movement

ORIGA-Sensoflex

(incremental displacement measuring system)

Series SFI-plus

for cylinder series

- **OSP-P..**

Characteristics			
Characteristics	Unit	Description	
Type		**21210FIL**	**21211FIL**
Output Function			
Resolution	mm	0.1	1
Pole lengths magnetic scale	mm	5	
Maximum speed	m/s	10	
Repeat accuracy		± 1 Increment	
Distance between sensor and scale	mm	< 2	
Tangential deviation		≤ 3° / ≤ 1°	
Lateral deviation	mm	≤ ± 1.5	
Switching output		push / pull	
Electrical characteristics			
Operating voltage U_b	V DC	10 – 30	
Voltage drop	V	≤ 2	
Continuous current for each output	mA	≤ 40	
Power consumption at U_b = 24V, switched on, without load	mA	≤ 15	
Short-circuit protection		yes	
Reverse polarity protection		yes	
Protection from inductive load		yes	
EMC			
Emission standard for industrial		DIN EN 61000-6-4	
Immunity for industrial environments		DIN EN 61000-6-2	
Mechanical Characteristics			
Housing material		Aluminium	
Cable length	m	5.0 – casted, flying lead	
Cable cross section	mm²	2 x 0.14 + 2 x 0.22	
Cable type		PUR, black	
Bending radius, moving	mm	≥ 50	
Weight (mass)	kg	appr. 0.165	
Environmental Conditions / Shock Resistance			
Degree of protection	IP	67 to EN60529	
Ambient temperature range	°C	-25 to +85	
Vibration stress to EN 60068-2-6	m/s²	300, 55 Hz...2 kHz	
Shock to EN 60068-2-27	m/s²	300, 11 ms	

Note:

For combinations Active Brake AB + SFI-plus + Magnetic Switch contact our technical department please.

The right to introduce technical modifications is reserved

Sensing Head

The sensing head provides two pulsating, 90° out of phase counter signals (phase A/B) with a 0.1 mm resolution (option 1 mm).
The counting direction can be determined automatically from the phase variance of the counter signals.

Electrical Connection	
Colour	Function
red (RD)	10 ... 30 V DC
black (BK)	ground
yellow (YE)	signal A
green (GN)	signal B
shield	shielding

SFI-plus mounted on a rodless cylinder series OSP-P

The SFI-plus system can be mounted directly on a rodless OSP-P cylinder with the special mounting kit.
The position of the sensing head is generally 90° to the carrier.

Combinations consisting of SFI-plus and OSP-P Cylinders with guides are available on request.

Dimensions [mm] – Sensing Head

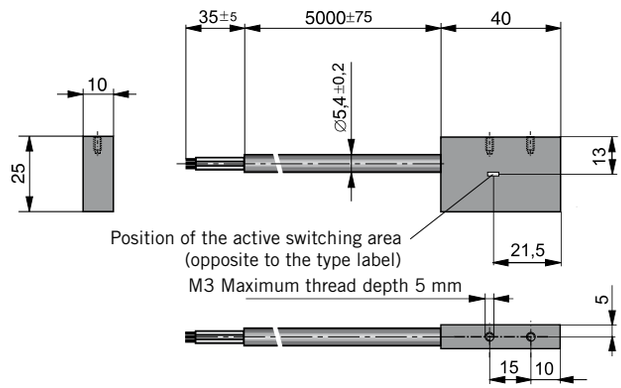

Output signal – Sensing Head

$U_a = U_e$	Phase B	U_{a1}	0°	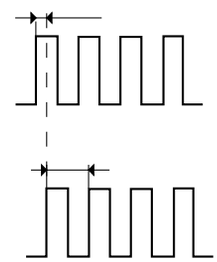
	Phase A	U_{a2}	90°	

Note: Impulse Freqency:
Pole distance of the magnetic measurement scale is 5mm.

Impulse generation depends on the SFI-plus type used. The proportional output frequency of the signal impulses increases as the travel speed goes up.

The cycle freqency of the downstream counter input must be set accordingly.

Displacement measuring system	Resolution [mm]	Velocity [m/sec]	Output freqency [kHz]
SFI-plus 21210FIL	0.1	1	10
SFI-plus 21211FIL	1	1	1

Dimensions – in combination with OSP-P cylinders

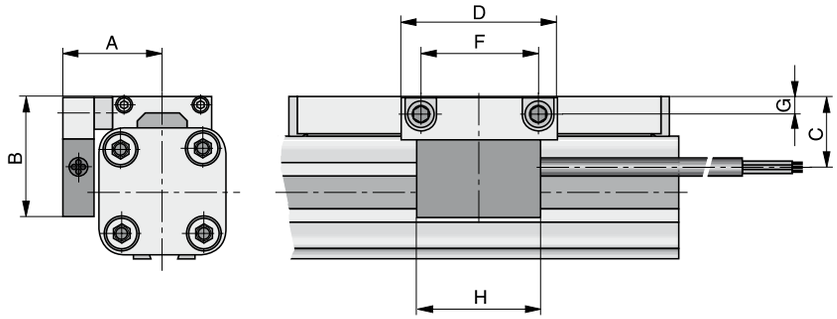

Dimension Table [mm]							
Serie	**A**	**B**	**C**	**D**	**F**	**G**	**H**
OSP-P25	31	43	23	50	38	5.5	40
OSP-P32	37	50	30	50	38	6.5	40
OSP-P40	42	54	34	50	38	6.5	40
OSP-P50	49	59	39	50	38	6.5	40
OSP-P63	59	73	49	50	38	10	40
OSP-P80	72	90	64	50	38	12	40

Order instructions	
Description	
Sensing head with measuring scale – Resolution 0.1 mm (please order overall length *)	**21240-measurement scale [mm], 5 digits**
Option: Sensing head with measuring scale – Resolution 1 mm (please order overall length *)	**21241-measurement scale [mm], 5 digits**
Sensing head – Resolution 0.1 mm (spare part)	**21210FIL**
Option: Sensing head – Resolution 1 mm (spare part)	**21211FIL**
Measuring scale per meter (spare part)	**21235FIL**
Mounting kit for OSP-P25	**21213FIL**
Mounting kit for OSP-P32	**21214FIL**
Mounting kit for OSP-P40	**21215FIL**
Mounting kit for OSP-P50	**21216FIL**
Mounting kit for OSP-P63	**21217FIL**
Mounting kit for OSP-P80	**21218FIL**

* Overall length of the measuring scale results from stroke length of the cylinder + dead length
Dead length for linear drives series OSP-P see table.

Note:
Order instructions in combination with basic cylinder see page 24, pos. 25

Series	Dead length [mm]
OSP-P 25	154
OSP-P 32	196
OSP-P 40	240
OSP-P 50	280
OSP-P 63	350
OSP-P 80	422

Example:
Cylinder OSP-P, Ø25 mm, stroke length 1000 mm

dead length	+ stroke length	= overall length of the measuring scale
154 mm	**+ 1000 mm**	**= 01154 mm**

Please use this order pattern: 21240-01154

The right to introduce technical modifications is reserved

Total overview of options (not all of them can be combined !)

1-4	5+6	7	8	9	10	11	12-16
OSPP	25	0	0	0	0	0	01100

Piston-Ø
10
16
25
32
40
50
63
80

Version / Piston	
0	standard
1	Tandem
4	Clean room cylinder
6	ATEX Standard [4]
C	Classic
T	Classic Tandem

Air Connection	
0	standard
1	on the end face
2	both at one end (end caps are not turnable)
3	left standard right end face
4	right standard left end face
7	Clean room
A	3/2 way valve VOE 24 V = Ø 25,32,40,50
B	3/2 way valve VOE 230V~ / 110 V= Ø 25,32,40,50
C	3/2 way valve VOE 48 V= Ø 25,32,40,50
E	3/2 way valve VOE 110 V~ Ø 25,32,40,50

Seals	
0	standard (NBR)
1	Viton® [1]

Lubrication	
0	standard
1	slow speed [2] [3]

Screws	
0	standard
1	stainless

Stroke
Input in mm (5 digits)

[1] Viton with VOE not possible.

[2] "Slow speed lubrication" in combination with „Viton® " seals on demand.

[3] „Lubrication slow speed" in combination with „max. cushioning length" not possible.

[4] Combination ATEX with VOE not possible.

17	18	19	20	21	22	**23**	**24**	25
0	0	0	0	0	0	**0**	**0**	0

End cap position	
0	L+R 0° = in front
1	L+R 90° = underneath
2	L+R 180° = at the back
3	L+R 270° = side of outerband
4	L 90° = underneath R 0° = in front
5	L 180° = at the back R 0° = in front
6	L 270° = side of outerband R 0° = in front
7	L 0° = in front R 90° = underneath
8	L 180° = at the back R 90° = underneath
9	L 270° = side of outerband R 90° = underneath
A	L 0° = in front R 180° = at the back
B	L 90° = underneath R 180° = at the back
C	L 270° = side of outerband R 180° = at the back
D	L 0° = in front R 270° = side of outerband
E	L 90° = underneath L 270° = side of outerband
F	L 180° = at the back R 270° = side of outerband

Cushioning	
0	standard
1	max. length [3)]
2	variable stop complete VS soft left only for Starline, KF and Heavy Duty guide
3	variable stop complete VS hard left only for Starline, KF and Heavy Duty guide
4	variable stop complete VS soft right only for Starline, KF and Heavy Duty guide
5	variable stop complete VS hard right only for Starline, KF and Heavy Duty guide
6	variable stop complete VS soft both sides only for Starline, KF and Heavy Duty guide
7	variable stop complete VS hard both sides only for Starline, KF and Heavy Duty guide

Piston Mounting	
0	without
1	Clevis mounting

Guides/ Brakes/ Inversion	
0	without
2	Slideline SLXX
3	Slideline with Activebrake SL-ABXX
4	Slideline with Passivebrake Multibrake SL-MBXX
6	Proline PLXX
7	Proline with Activebrake PL-ABXX
8	Proline with Passivebrake Multibrake PL-MBXX
A	Activebrake ABXX
B	Starline STLXX
C	KFXX
D	Heavy Duty HDXX
E	PSXX/25 Powerslide
F	PSXX/35 Powerslide
G	PSXX/44 Powerslide
H	PSXX/60 Powerslide
I	PSXX/76 Powerslide
M	Inversion
N	Duplex

add. Guide Carriage	
0	without
2	Guide Carriage Slideline SLXX
3	Guide Carriage Slideline Activebrake SL-ABXX
4	Guide Carriage Slideline with Passivebrake Multibrake SL-MB
6	Guide Carriage Proline PLXX
7	Guide Carriage Proline Activebrake PL-ABXX
8	Guide Carriage Proline with Passivebrake Multibrake PL-MBXX
B	Guide Carriage Starline STLXX
C	Guide Carriage KFXX
D	Guide Carriage Heavy Duty HDXX
E	Guide Carriage Powerslide PSXX/25
F	Guide Carriage Powerslide PSXX/35
G	Guide Carriage Powerslide PSXX/44
H	Guide Carriage Powerslide PSXX/60
I	Guide Carriage Powerslide PSXX/76
M	Guide Carriage Slideline with Passivebrake Multibrake SL-MBXX without brake function
N	Guide Carriage Proline with Passivebrake Multibrake PL-MBXX without brake function

Cover / Cable Channel	
0	standard
1	Cable channel
2	Cable channel two-sided
X	without Cover rail

Measuring system	
0	without
X	SFI 0.1 mm
Y	SFI 1 mm

Parker Worldwide

Europe, Middle East, Africa

AE – United Arab Emirates, Dubai
Tel: +971 4 8127100
parker.me@parker.com

AT – Austria, Wiener Neustadt
Tel: +43 (0)2622 23501-0
parker.austria@parker.com

AT – Eastern Europe, Wiener Neustadt
Tel: +43 (0)2622 23501 900
parker.easteurope@parker.com

AZ – Azerbaijan, Baku
Tel: +994 50 2233 458
parker.azerbaijan@parker.com

BE/LU – Belgium, Nivelles
Tel: +32 (0)67 280 900
parker.belgium@parker.com

BY – Belarus, Minsk
Tel: +375 17 209 9399
parker.belarus@parker.com

CH – Switzerland, Etoy
Tel: +41 (0)21 821 87 00
parker.switzerland@parker.com

CZ – Czech Republic, Klecany
Tel: +420 284 083 111
parker.czechrepublic@parker.com

DE – Germany, Kaarst
Tel: +49 (0)2131 4016 0
parker.germany@parker.com

DK – Denmark, Ballerup
Tel: +45 43 56 04 00
parker.denmark@parker.com

ES – Spain, Madrid
Tel: +34 902 330 001
parker.spain@parker.com

FI – Finland, Vantaa
Tel: +358 (0)20 753 2500
parker.finland@parker.com

FR – France, Contamine s/Arve
Tel: +33 (0)4 50 25 80 25
parker.france@parker.com

GR – Greece, Athens
Tel: +30 210 933 6450
parker.greece@parker.com

HU – Hungary, Budapest
Tel: +36 23 885 470
parker.hungary@parker.com

IE – Ireland, Dublin
Tel: +353 (0)1 466 6370
parker.ireland@parker.com

IT – Italy, Corsico (MI)
Tel: +39 02 45 19 21
parker.italy@parker.com

KZ – Kazakhstan, Almaty
Tel: +7 7272 505 800
parker.easteurope@parker.com

NL – The Netherlands, Oldenzaal
Tel: +31 (0)541 585 000
parker.nl@parker.com

NO – Norway, Asker
Tel: +47 66 75 34 00
parker.norway@parker.com

PL – Poland, Warsaw
Tel: +48 (0)22 573 24 00
parker.poland@parker.com

PT – Portugal, Leca da Palmeira
Tel: +351 22 999 7360
parker.portugal@parker.com

RO – Romania, Bucharest
Tel: +40 21 252 1382
parker.romania@parker.com

RU – Russia, Moscow
Tel: +7 495 645-2156
parker.russia@parker.com

SE – Sweden, Spånga
Tel: +46 (0)8 59 79 50 00
parker.sweden@parker.com

SK – Slovakia, Banská Bystrica
Tel: +421 484 162 252
parker.slovakia@parker.com

SL – Slovenia, Novo Mesto
Tel: +386 7 337 6650
parker.slovenia@parker.com

TR – Turkey, Istanbul
Tel: +90 216 4997081
parker.turkey@parker.com

UA – Ukraine, Kiev
Tel +380 44 494 2731
parker.ukraine@parker.com

UK – United Kingdom, Warwick
Tel: +44 (0)1926 317 878
parker.uk@parker.com

ZA – South Africa, Kempton Park
Tel: +27 (0)11 961 0700
parker.southafrica@parker.com

North America

CA – Canada, Milton, Ontario
Tel: +1 905 693 3000

US – USA, Cleveland
Tel: +1 216 896 3000

Asia Pacific

AU – Australia, Castle Hill
Tel: +61 (0)2-9634 7777

CN – China, Shanghai
Tel: +86 21 2899 5000

HK – Hong Kong
Tel: +852 2428 8008

IN – India, Mumbai
Tel: +91 22 6513 7081-85

JP – Japan, Tokyo
Tel: +81 (0)3 6408 3901

KR – South Korea, Seoul
Tel: +82 2 559 0400

MY – Malaysia, Shah Alam
Tel: +60 3 7849 0800

NZ – New Zealand, Mt Wellington
Tel: +64 9 574 1744

SG – Singapore
Tel: +65 6887 6300

TH – Thailand, Bangkok
Tel: +662 186 7000-99

TW – Taiwan, Taipei
Tel: +886 2 2298 8987

South America

AR – Argentina, Buenos Aires
Tel: +54 3327 44 4129

BR – Brazil, Sao Jose dos Campos
Tel: +55 800 727 5374

CL – Chile, Santiago
Tel: +56 2 623 1216

MX – Mexico, Apodaca
Tel: +52 81 8156 6000

© 2014 Parker Hannifin Corporation. All rights reserved.

P-A4P011GB 04/2014

Parker Hannifin GmbH
Pat-Parker-Platz 1
41564 Kaarst (Germany)

Tel.: + 49 (0)2131 4016-0
Fax: + 49 (0)2131 4016-9199
Internet: www.parker.com
E-Mail: parker.germany@parker.com