aerospace
climate control
electromechanical
filtration
fluid & gas handling
hydraulics
pneumatics
process control
sealing & shielding

Pneumatic Cylinders

Series P1D Premier Line - Ø32 to Ø125 mm According to ISO 15552

Catalogue PDE2570TCUK

Parker

ENGINEERING YOUR SUCCESS.

Important

Before attempting any external or internal work on the cylinder or any connected components, make sure the cylinder is vented and disconnect the air supply in order to ensure isolation of the air supply.

Note

All technical data in this catalogue are typical data only.
Air quality is essential for maximum cylinder service life (see ISO 8573).

WARNING

FAILURE OR IMPROPER SELECTION OR IMPROPER USE OF THE PRODUCTS AND/OR SYSTEMS DESCRIBED HEREIN OR RELATED ITEMS CAN CAUSE DEATH, PERSONAL INJURY AND PROPERTY DAMAGE.

This document and other information from Parker Hannifin Corporation, its subsidiaries and authorized distributors provide product and/or system options for further investigation by users having technical expertise. It is important that you analyze all aspects of your application and review the information concerning the product or system in the current product catalog. Due to the variety of operating conditions and applications for these products or systems, the user, through its own analysis and testing, is solely responsible for making the final selection of the products and systems and assuring that all performance, safety and warning requirements of the application are met. The products described herein, including without limitation, product features, specifications, designs, availability and pricing, are subject to change by Parker Hannifin Corporation and its subsidiaries at any time without notice.

SALE CONDITIONS

The items described in this document are available for sale by Parker Hannifin Corporation, its subsidiaries or its authorized distributors. Any sale contract entered into by Parker will be governed by the provisions stated in Parker's standard terms and conditions of sale (copy available upon request).

Contents

	page
The P1D standard cylinders, ISO 15552	4 - 7
Design variants	8
Cylinder forces, double acting variants	9
Standard stroke	10
Operating data	10
Working medium, air quality	10
Material specification	11
Guide for selecting suitable tubing	12 - 13
P1D Standard	14 - 15
P1D Pro Clean	16 - 18
P1D-V with valve built on	19 - 21
P1D-L with dynamic rod lock device	22 - 24
P1D-H with static rod lock device	25 - 27
Pneumatic circuits	28
The simple and complete order code key	29
P1D with intermediate trunnion option	30
P1D with extended piston rod	31
P1D with piston rod in alternative materials	31
P1D through piston rod	32
P1D for operation with a dry piston rod	32
P1D model order code key	33
P1E Guidance modules	34 - 37
P1C & P1D Mountings kits	38
Cylinder mountings kits	39 - 43
Piston mountings kits	44 - 45
Accessories	46
P8S Sensors	47 - 49
Seal kits	50 - 51
Spare parts	52
Solenoids and plugs for P1D-V built on valve	53
P1DV Air Reservoirs	54
Compressed Air Quality	55

The P1D standard cylinders, ISO 15552

A complete cylinder range from the ground up, with major investment in research, material and technology, demands long experience and major resources. When we developed our P1D cylinder range, we started from scratch, but not really. Decades of research and learning about what our customers really need world-wide has given us a very stable foundation to start from.

P1D is a cylinder design of the highest possible quality, every detail has been thought through, without making any compromises. It has a large number of innovations which could only be achieved by using the best possible materials and methods. The result is a complete family of ISO/VDMA/AFNOR cylinders, of which we are very proud.

P1D is a high technology cylinder design for just about every conceivable application, both simple and highly complex.

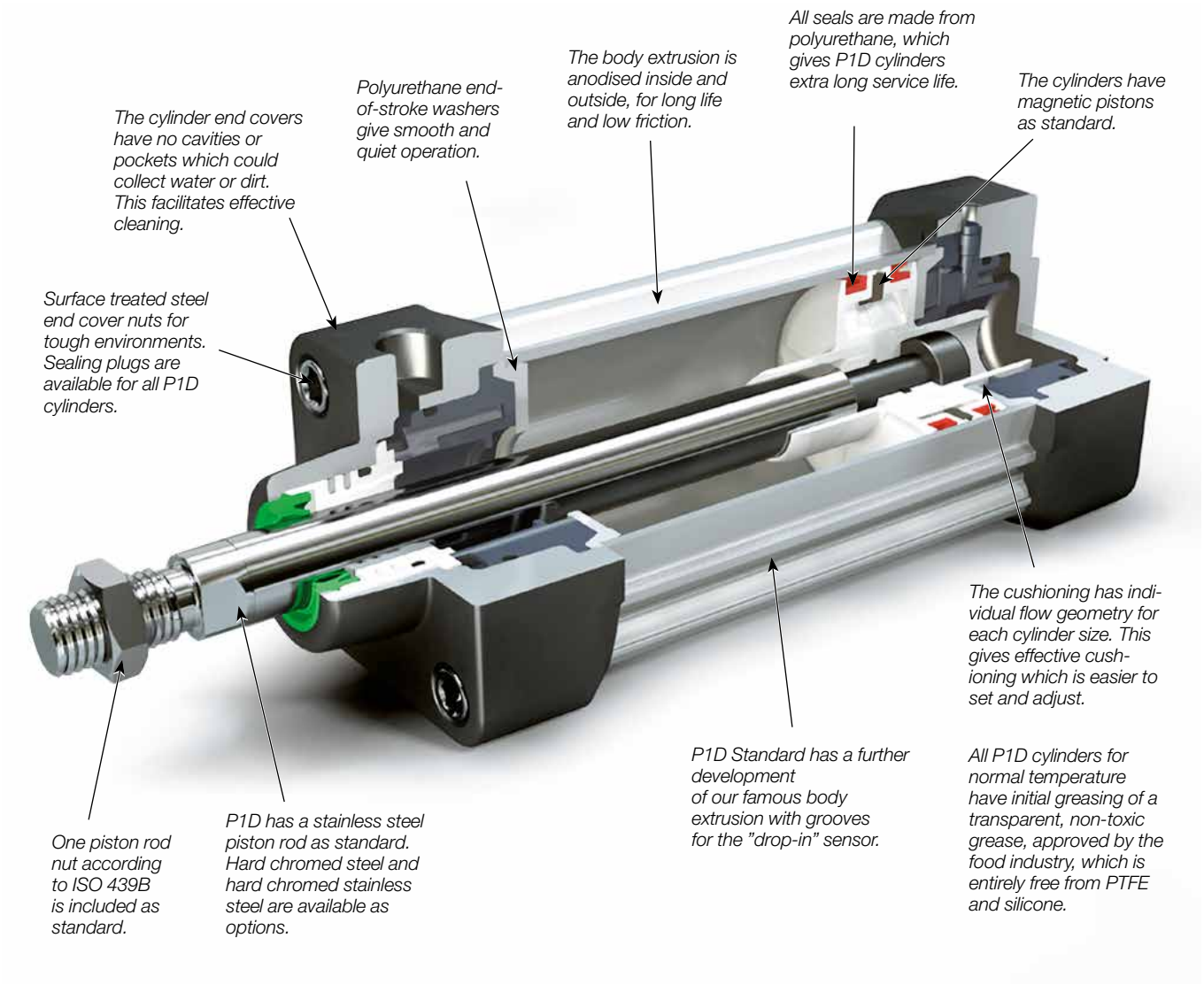

P1D Standard

The innovative P1D is a future-proof generation of ISO cylinders. The cylinders are double-acting, with a unique design of air cushioning. The light, stiff body extrusion has sensor grooves for simple and protected sensor installation.

Installation dimensions according to international standards

Complies with the ISO 6431, ISO 15552, VDMA 24562 and AFNOR installation dimension standards.
For customer reassurance world-wide.

High technology design

The best materials, manufacturing methods and design of every detail have been carefully tested, to give the best possible product. The internal components are made of high strength plastics, for quiet operation and long service life. The aluminium end caps and the torsionally stiff aluminium body extrusion make the cylinder robust and suitable for a wide range of applications.

High quality

The P1D has been developed with quality in all phases – requirement specification, design, planning, purchasing, production, distribution and service. We have been certified under the ISO 9001 QA standard for the past ten years. Quality in all our products and services is our watchword.

Even more functions and variants

The P1D is available with all the usual optional designs, such as: Through piston rod, high and low temperature, hydraulic operation, extended piston rod etc.

A special variant is the unique self-lubricating HDPE scraper ring and piston rod seal, specially designed for operation with a completely dry piston rod (i.e. applications where the film of grease on the piston rod is regularly washed off).

Complete accessory programme

P1D offers a complete ISO, VDMA and AFNOR compatible accessory programme, with a wide range of piston rod and cylinder mountings for both pivoted and fixed operation. Several of these types of mountings are available in stainless steel. The ”drop-in” sensors are available with both reed and electronic operation, with a wide choice of connector types and cable lengths.

Mechanically protected sensor technology

The body extrusion has recessed sensor grooves on three sides of the cylinder. The sensors are of the ”drop-in” type, and are quickly and easily installed in the T-groove from both sides. Both the cable and the sensor are protected in the groove. Choose a sensor with 3 or 10 m cable, 8 mm connector or the M12 connector.

Optimised cushioning

Thanks to the plastic inserts in the end covers, each cylinder bore has been given individual flow geometry. This provides optimised cushioning, which is quicker and easier to set and adjust.

Smooth, quiet operation and long service life

All seals and end-of-stroke washers are made from polyurethane (PUR), the bearings and piston are made from proven engineering plastics with excellent bearing properties and all cylinders are greased at the factory with a transparent, foodstuffs-approved grease. Altogether this gives the P1D very long service life and smooth, quiet operation.

Design variants

Dry piston rod, HDPE

In many applications, primarily in the foodstuffs industry, the cylinders are cleaned frequently. This means that the film of grease on the piston rod is washed off, which puts special demands on the materials and the design of the piston rod seal system (scraper ring and piston rod seal). A piston rod seal system specially designed for dry rod operation is available as options for this type of application, for all bores of P1D cylinders. The system has a specially designed L-shaped seal and the material is self-lubricating, high molecular weight plastics HDPE (High-Density Polyethylene) – the same system as in our previous P1C cylinders, with proven function.

FPM scraper for high chemical resistance

For use in applications where chemicals may affect the scraper in the front end cover, an option with a scraper in FPM rubber for better chemical resistance must be used.

Metal scraper ring, P1D-X Series

Standard scraper rings cannot be used in environments where the piston rod may be coated with resin, ice, cement, sugar crystals, dough, etc., primarily in timber handling, refrigerated/ chilled transport, cement industry, chemicals and food and drinks. Hard and dirty coatings damage the standard scraper rings and shorten their service life, introducing dirt into the cylinder. A scraper ring has been specially designed for applications of this kind, as an option for all diameters of P1D cylinders. The scraper ring, which requires a hard-chromium plated piston rod, has a stainless steel carrier, a brass outer scraper ring and a nitrile rubber inner scraper ring.
See catalogue PDE2662TC.

Low and high ambient temperature, P1D-X Series

For all bores, Ø32-125 mm, the P1D can be supplied in special high ambient temperature and low ambient temperature versions. The cylinders have seal systems, materials and grease for their particular temperature ranges. The high temperature version does not have magnetic piston (no function at high temperatures). The low temperature cylinders do have magnetic piston, but remember that most sensors are specified to – 25 °C (no function below this temperature). Ambient temperature ranges:
– Low temperature: -40 °C to +80 °C
– High temperature: -10 °C to +150 °C
See catalogue PDE2662TC

Design variants

- **P1D Standard** – This series is the premier in ISO pneumatic cylinders. With various piston rod materials, seal options and supported by a full range of ISO mountings the P1D-S series is suitable for wide range of any applications.

- **P1D Pro Clean** – This series of clean design cylinders offers two T slots within one face of the tube allowing the possibility to add sensors. The position of the T slots can be specified on any single face using the order code key. These cylinders have a clean design but are intended for applications where sensors are required.

- **P1D Tie rod** – This series range of tie rod cylinders is intended for use in a wide range of applications. Careful design and high quality manufacture throughout ensure long service life and optimum economy. Bore sizes from 32 to 320 mm, see relevant catalogue for this Series. See catalogue PDE2667TC.

- **P1D with valve built on** – P1D Standard can be ordered with a factory-fitted valve and piping. The valve series is the robust and compact Viking Xtreme series.

- **P1D with piston rod locking** – P1D Standard is available in a version with piston rod locking, allowing the piston rod to be locked in any position and direction. The lock unit, of the air/spring actuated type, is integrated in the front end piece of the cylinder. The lock unit can be used for braking as well as locking. With no signal pressure, the full force of the lock is applied to the piston rod.

- **P1D-X High, Low Temperature, Metallic Scraper & Piston made in aluminium**
  – For extreme conditions. These cylinders for high and low temperatures have materials and sealing systems specially designed for their particular temperature ranges. Internal components are made to give optimum function at high or low temperature in combination with high performances and special grease. See catalogue PDE2662TC.

Cylinder forces, double acting variants

Cyl. bore/ pist. rod mm	Stroke	Piston area cm²	Max theoretical force in N (bar) 1.0	2.0	3.0	4.0	5.0	6.0	7.0	8.0	9.0	10.0
32/12	+	8.0	80	161	241	322	402	**483**	563	643	724	804
	-	6.9	69	138	207	276	346	**415**	484	553	622	691
40/16	+	12.6	126	251	377	503	628	**754**	880	1005	1131	1257
	-	10.6	106	212	318	424	530	**636**	742	848	954	1060
50/20	+	19.6	196	393	589	785	982	**1178**	1374	1571	1767	1963
	-	16.5	165	330	495	660	825	**990**	1155	1319	1484	1649
63/20	+	31.2	312	623	935	1247	1559	**1870**	2182	2494	2806	3117
	-	28.0	280	561	841	1121	1402	**1682**	1962	2242	2523	2803
80/25	+	50.3	503	1005	1508	2011	2513	**3016**	3519	4021	4524	5027
	-	45.4	454	907	1361	1814	2268	**2721**	3175	3629	4082	4536
100/25	+	78.5	785	1571	2356	3142	3927	**4712**	5498	6283	7069	7854
	-	73.6	736	1473	2209	2945	3682	**4418**	5154	5890	6627	7363
125/32	+	122.7	1227	2454	3682	4909	6136	**7363**	8590	9817	11045	12272
	-	114.7	1147	2294	3440	4587	5734	**6881**	8027	9174	10321	11468

+ = Outward stroke
- = Return stroke

Note!
Select a theoretical force 50-100% larger than the force required

Main data: P1D

Cylinder designation	Cylinder bore mm	Cylinder area cm²	Piston rod dia. mm	Piston rod area cm²	Cushioning thread	Air length mm	Connection consumption[2] litre	Connection thread
P1D-•032••-XXXX[1]	32	8.0	12	1.1	M10x1.25	17	0.105	G1/8
P1D-•040••-XXXX[1]	40	12.6	16	2.0	M12x1.25	19	0.162	G1/4
P1D-•050••-XXXX[1]	50	19.6	20	3.1	M16x1.5	20	0.253	G1/4
P1D-•063••-XXXX[1]	63	31.2	20	3.1	M16x1.5	23	0.414	G3/8
P1D-•080••-XXXX[1]	80	50.3	25	4.9	M20x1.5	23	0.669	G3/8
P1D-•100••-XXXX[1]	100	78.5	25	4.9	M20x1.5	27	1.043	G1/2
P1D-•125••-XXXX[1]	125	122.7	32	8.0	M27x2	30	1.662	G1/2

Total mass including moving parts

Cylinder designation	Total mass (kg) at 0 mm stroke Standard	Pro Clean	Supplement mass (kg) for rod locking All variants	Total mass (kg) Supplement per 10 mm stroke Standard	Pro Clean
P1D-•032••-X	0.55	0.60	0.31	0.023	0.047
P1D-•040••-X	0.80	0.88	0.44	0.033	0.063
P1D-•050••-X	1.20	1.32	0.61	0.048	0.094
P1D-•063••-X	1.73	1.86	1.25	0.051	0.101
P1D-•080••-X	2.45	2.63	2.45	0.075	0.142
P1D-•100••-X	4.00	4.22	3.72	0.084	0.168
P1D-•125••-X	6.87	7.01	6.07	0.138	0.248

Mass moving parts only (for cushioning calculation)

Cylinder designation	Mass moving parts(kg) at 0 mm stroke All variants	Supplement per 10 mm stroke All variants
P1D-•032••-X	0.13	0.009
P1D-•040••-X	0.24	0.016
P1D-•050••-X	0.42	0.025
P1D-•063••-X	0.50	0.025
P1D-•080••-X	0.90	0.039
P1D-•100••-X	1.10	0.039
P1D-•125••-X	2.34	0.063

1) Stroke
2) Free air consumption per 10 mm stroke for a double stroke at 6 bar

Standard stroke

Standard strokes for all P1D cylinders comply with ISO 4393. (* 40 is not an ISO standard stroke)
Special strokes up to 2800 mm.

● = Standard stroke (mm) = Stroke to special order

Order no XXXX = Stroke	Cylinder bore (mm)	25	40	50	80	100	125	160	200	250	320	400	500	600	700	800	2800
Double acting Profile cylinder																	
P1D-S032MS-XXXX	**32**	●	●	●	●	●	●	●	●	●	●	●	●				//
P1D-S040MS-XXXX	**40**	●	●	●	●	●	●	●	●	●	●	●	●				//
P1D-S050MS-XXXX	**50**	●	●	●	●	●	●	●	●	●	●	●	●				//
P1D-S063MS-XXXX	**63**	●	●	●	●	●	●	●	●	●	●	●	●				//
P1D-S080MS-XXXX	**80**	●	●	●	●	●	●	●	●	●	●	●	●				//
P1D-S100MS-XXXX	**100**	●	●	●	●	●	●	●	●	●	●	●	●				//
P1D-S125MS-XXXX	**125**	●	●	●	●	●	●	●	●	●	●	●	●				//

Operation data

Working pressure	Max 10 bar	
Working temperature min	max	
Standard	-20 °C	+80 °C

Greased for life, does not normally need additional lubrication. If extra lubrication is given, this must always be continued.

Bores and strokes

P1D	32 - 125 mm
Standard strokes	25 - 500 mm according to ISO 4393
Max stroke	2800 mm

Working medium, air quality

Working medium Dry, filtered compressed air to ISO 8573-1 class 3.4.3.

Recommended air quality for cylinders

For best possible service life and trouble-free operation, ISO 8573-1 quality class 3.4.3 should be used. This means 5 µm filter (standard filter) dew point +3 ºC for indoor operation (a lower dew point should be selected for outdoor operation) and oil concentration 1.0 mg oil/m³, which is what a standard compressor with a standard filter gives.

ISO 8573-1 quality classes

Quality class	Pollution particle size (µm)	Pollution max con-centration (mg/m³)	Water max. press. dew point (°C)	Oil max con-centration (mg/m³)
1	0.1	0.1	-70	0.01
2	1	1	-40	0.1
3	5	5	-20	1.0
4	15	8	+3	5.0
5	40	10	+7	25
6	-	-	+10	-

Important!

If the cylinder is used in applications with significant lateral loads on the piston rod, an external guide must be used to achieve maximum service life.

Material specification

Standard design

Body extrusion	Natural colour, anodised aluminium
End cover	Black anodised aluminium
End cover inserts	POM
End cover nuts/screws	Zinc plated steel 8.8
Piston rod nut	Zinc plated steel
Piston rod	Austenitic Stainless steel X8CRNIS18-9 (AISI 303)
Scraper ring	PUR
Piston rod bearing	POM
Piston	POM
Piston bearing	POM
Magnetic ring	Plastic bound magnetic material
Piston bolt	Zinc plated steel
Piston seal	PUR
O-rings	Nitrile rubber, NBR
End-of-stroke washers	PUR
Cushioning seals	LCP - Liquid crystal polymer (Plastic)
Cushioning screws	POM

Design variants

Cylinders for dry rod operation

Seals/scraper ring	FPM/HDPE

Option

Piston rod material	Hard-chromium plated austenitic steel NF EN 10083-1 C45E Hard-chromium plated Austenitic-ferritic stainless steel X3CrNiMoN27-5-2 (AISI 329)

Cushioning characteristics

The diagram below is used for dimensioning of cylinders related to the cushioning capacity. The maximum cushioning capacity shown in the diagram assumes the following:

- Low load, i.e. low pressure drop across the piston
- Equilibrium speed
- Correctly adjusted cushioning screw
- 6 bar at cylinder port

The load is the sum of internal and external friction, plus any gravitational forces. At high relative load (pressure drop exceeding 1 bar), we recommend that for any given speed, the mass should be reduced by a factor of 2.5, or for a given mass, the speed should be reduced by a factor of 1.5. This is in relation to the maximum performance given in the diagram

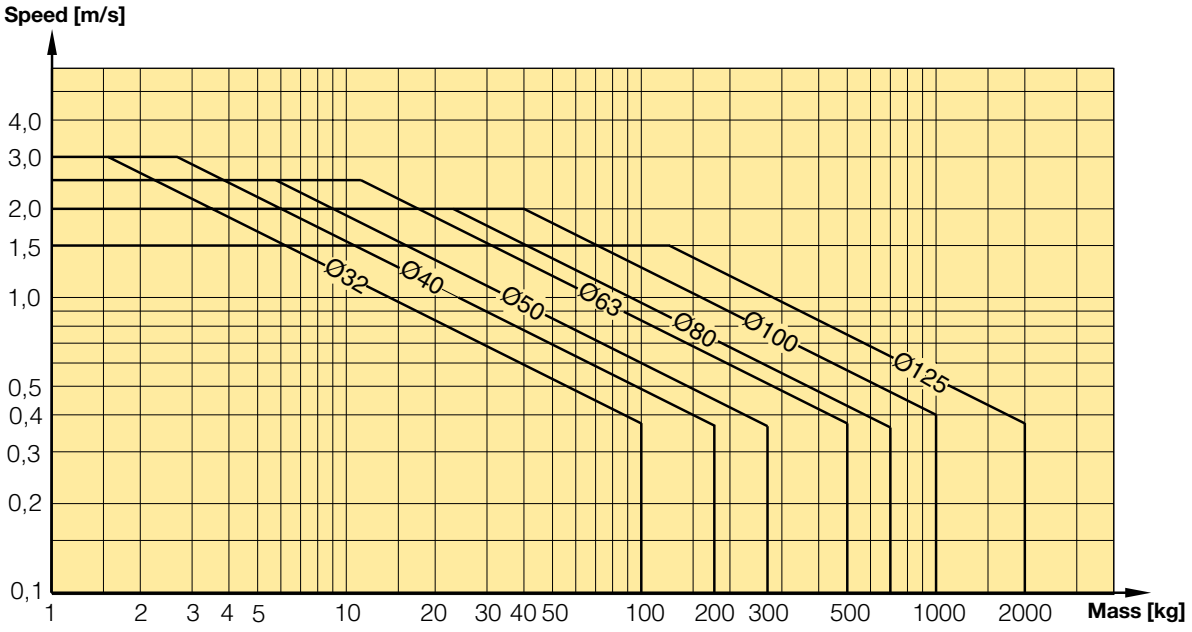

Guide for selecting suitable tubing

The selection of the correct size of tubing is often based on experience, with no great thought to optimizing energy efficiency and cylinder velocity. This is usually acceptable, but making a rough calculation can result in worthwhile economic gains.

The following is the basic principle:

1. The primary line to the working valve could be over sized (this does not cause any extra air consumption and consequently does not create any extra costs in operation).
2. The tubes between the valve and the cylinder should, however, be optimized according to the principle that an insufficient bore throttles the flow and thus limits the cylinder speed, while an oversized pipe creates a dead volume which increases the air consumption and filling time.

The chart below is intended to help when selecting the correct size of tube to use between the valve and the cylinder.

The following prerequisites apply:

The *cylinder load should be about 50%* of the theoretical force (= normal load). A lower load gives a higher velocity and vice versa. The tube size is selected as a function of the *cylinder bore*, the desired *cylinder velocity* and the *tube length* between the valve and the cylinder.

If you want to use the capacity of the valve to its maximum, and obtain maximum speed, the tubing should be chosen so that they at least correspond with the equivalent restriction diameter (see description below), so that the tubing does not restrict the total flow. This means that a short tubing must have at least the equivalent restriction diameter. If the tubing is longer, choose it from the table below. Straight fittings should be chosen for highest flow rates. (Elbow and banjo fittings cause restriction.)

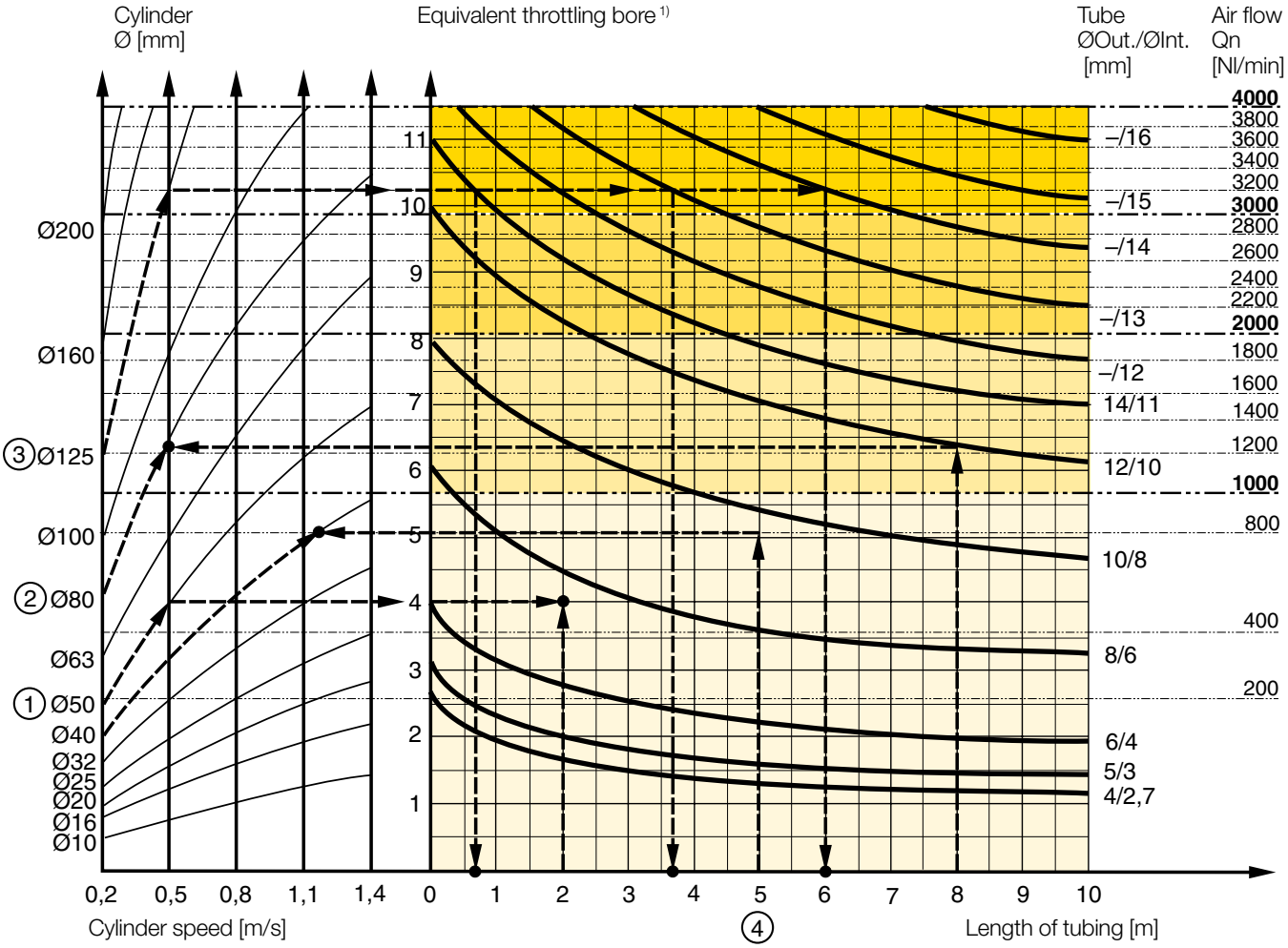

1) The "equivalent throttling bore" is a long throttle (for example a tube) or a series of throttles (for example, through a valve) converted to a short throttle which gives a corresponding flow rate. This should not be confused with the "orifice" which is sometimes specified for valves. The value for the orifice does not normally take account of the fact that the valve contains a number of throttles.

2) Qn is a measure of the valve flow capacity, with flow measured in litre per minute (l/min) at 6 bar(e) supply pressure and 1 bar pressure drop across the valve.

Example ① : Which tube diameter should be used?

A 50 mm bore cylinder is to be operated at 0.5 m/s. The tube length between the valve and cylinder is 2 m. In the diagram we follow the line from 50 mm bore to 0.5 m/s and get an “equivalent throttling bore“ of approximately 4 mm. We continue out to the right in the chart and intersect the line for a 2 m tube between the curves for 4 mm (6/4 tube) and 6 mm(8/6 tube). This means that a 6/4 tube throttles the velocity somewhat, while an 8/6 tube is a little too large. We select the 8/6 tube to obtain full cylinder velocity.

Example ②: What cylinder velocity will be obtained?

A 80 mm bore cylinder will be used, connected by 8 m 12/10 tube to a valve with Qn 1200 Nl/min. What cylinder velocity will we get? We refer to the diagram and follow the line from 8 mm tube length up to the curve for 12/10 tube. From there, we go horizontally to the curve for the Ø80 cylinder. We find that the velocity will be about 0.5 m/s.

Example ③: What is the minimum inner diameter and maximum lenght of tube?

For a application a 125 mm bore cylinder will be used. Maximum velocity of piston rod is 0.5 m/s. The cylinder will be controlled by a valve with Qn 3200 Nl/min. What diameter of tube can be used and what is maximum lenght of tube.
We refer to the diagram. We start at the left side of the diagram cylinder Ø125. We follow the line until the intersection with the velocity line of 0.5 m/s. From here we draw a horizontal line in the diagram. This line shows us we need an equivalent throttling bore of approximately 10 mm. Following this line horizontally we cross a few intersections. These intersections shows us the minimum inner diameter (rightside diagram) in combination with the maximum length of tube (bottomside diagram).

For example:
Intersection one: When a tube (14/11) will be used, the maximum length of tube is 0.7 meter.
Intersection two: When a tube (—/13) will be used, the maximum length of tube is 3.7 meter.
Intersection three: When a tube (—/14) will be used, the maximum length of tube is 6 meter.

Example ④ : Determining tube size and cylinder velocity with a particular cylinder and valve?

For an application using a 40 mm bore cylinder with a valve with Qn=800 Nl/min. The distance between the cylinder and valve has been set to 5 m.

Tube dimension: What tube bore should be selected to obtain the maximum cylinder velocity? Start at pipe length 5 m, follow the line up to the intersection with 800 Nl/min. Select the next largest tube diameter, in this case Ø10/8 mm.

Cylinder velocity: What maximum cylinder velocity will be obtained? Follow the line for 800 Nl/min to the left until it intersects with the line for the Ø40 mm cylinder. In this example, the speed is just above 1.1 m/s.

Valve series with respective flows in Nl/minute

Valve series	Qn in Nl/Min
Interface PS1	120
Moduflex Size 1 - Double 4/2 single solenoid	165
Adex A05	173
H Series Micro - Single 5/3 APB	228
Moduflex Size 1 - Single or Double 3/2	235
H Series Micro - Double 3/2	276
H Series Micro - Single 5/2	282
Moduflex Size 1 - Single 4/2	310
ISOMAX DX02	378
H Series ISO HB	390
Moduflex Size 2 - Single or Double 3/2	440
PVL-B stackable inline valve	540
Adex A12	560
ISOMAX DX01	588
Viking Xtrem P2LAX - G1/8"	660
Moduflex Size 2 - Single 4/2	800
H Series ISO HA	918
ISOMAX DX1 & DX Rail	1032
PVL-C stackable inline valve	1100
H Series ISO H1	1248
Viking Xtrem P2LBX - G1/4"	1290
ISOMAX DX2 & DX Rail	2298
Viking Xtrem P2LCX - G3/8"	2460
H Series ISO H2	2520
Viking Xtrem P2LDX - G1/2"	2658
ISOMAX DX3 & DX Rail	3840
H Series ISO H3	5022

P1D Standard

The order numbers on this page refer to P1D Standard without sensors. The cylinders can be ordered with sensors, fittings, piston rod and cylinder mountings, speed controls etc. for efficient logistics. Please consult your local sales.

II 2GD c T4 120 °C

Cyl. bore mm	Stroke mm	Order code
32 Conn. G1/8	25	**P1D-S032MS-0025**
	40	**P1D-S032MS-0040**
	50	**P1D-S032MS-0050**
	80	**P1D-S032MS-0080**
	100	**P1D-S032MS-0100**
	125	**P1D-S032MS-0125**
	160	**P1D-S032MS-0160**
	200	**P1D-S032MS-0200**
	250	**P1D-S032MS-0250**
	320	**P1D-S032MS-0320**
	400	**P1D-S032MS-0400**
	500	**P1D-S032MS-0500**
40 Conn. G1/4	25	**P1D-S040MS-0025**
	40	**P1D-S040MS-0040**
	50	**P1D-S040MS-0050**
	80	**P1D-S040MS-0080**
	100	**P1D-S040MS-0100**
	125	**P1D-S040MS-0125**
	160	**P1D-S040MS-0160**
	200	**P1D-S040MS-0200**
	250	**P1D-S040MS-0250**
	320	**P1D-S040MS-0320**
	400	**P1D-S040MS-0400**
	500	**P1D-S040MS-0500**
50 Conn. G1/4	25	**P1D-S050MS-0025**
	40	**P1D-S050MS-0040**
	50	**P1D-S050MS-0050**
	80	**P1D-S050MS-0080**
	100	**P1D-S050MS-0100**
	125	**P1D-S050MS-0125**
	160	**P1D-S050MS-0160**
	200	**P1D-S050MS-0200**
	250	**P1D-S050MS-0250**
	320	**P1D-S050MS-0320**
	400	**P1D-S050MS-0400**
	500	**P1D-S050MS-0500**
63 Conn. G3/8	25	**P1D-S063MS-0025**
	40	**P1D-S063MS-0040**
	50	**P1D-S063MS-0050**
	80	**P1D-S063MS-0080**
	100	**P1D-S063MS-0100**
	125	**P1D-S063MS-0125**
	160	**P1D-S063MS-0160**
	200	**P1D-S063MS-0200**
	250	**P1D-S063MS-0250**
	320	**P1D-S063MS-0320**
	400	**P1D-S063MS-0400**
	500	**P1D-S063MS-0500**

Cyl. bore mm	Stroke mm	Order code
80 Conn. G3/8	25	**P1D-S080MS-0025**
	40	**P1D-S080MS-0040**
	50	**P1D-S080MS-0050**
	80	**P1D-S080MS-0080**
	100	**P1D-S080MS-0100**
	125	**P1D-S080MS-0125**
	160	**P1D-S080MS-0160**
	200	**P1D-S080MS-0200**
	250	**P1D-S080MS-0250**
	320	**P1D-S080MS-0320**
	400	**P1D-S080MS-0400**
	500	**P1D-S080MS-0500**
100 Conn. G1/2	25	**P1D-S100MS-0025**
	40	**P1D-S100MS-0040**
	50	**P1D-S100MS-0050**
	80	**P1D-S100MS-0080**
	100	**P1D-S100MS-0100**
	125	**P1D-S100MS-0125**
	160	**P1D-S100MS-0160**
	200	**P1D-S100MS-0200**
	250	**P1D-S100MS-0250**
	320	**P1D-S100MS-0320**
	400	**P1D-S100MS-0400**
	500	**P1D-S100MS-0500**
125 Conn. G1/2	25	**P1D-S125MS-0025**
	40	**P1D-S125MS-0040**
	50	**P1D-S125MS-0050**
	80	**P1D-S125MS-0080**
	100	**P1D-S125MS-0100**
	125	**P1D-S125MS-0125**
	160	**P1D-S125MS-0160**
	200	**P1D-S125MS-0200**
	250	**P1D-S125MS-0250**
	320	**P1D-S125MS-0320**
	400	**P1D-S125MS-0400**
	500	**P1D-S125MS-0500**

The cylinders are supplied complete with one zinc plated steel piston rod nut.

P1D Standard

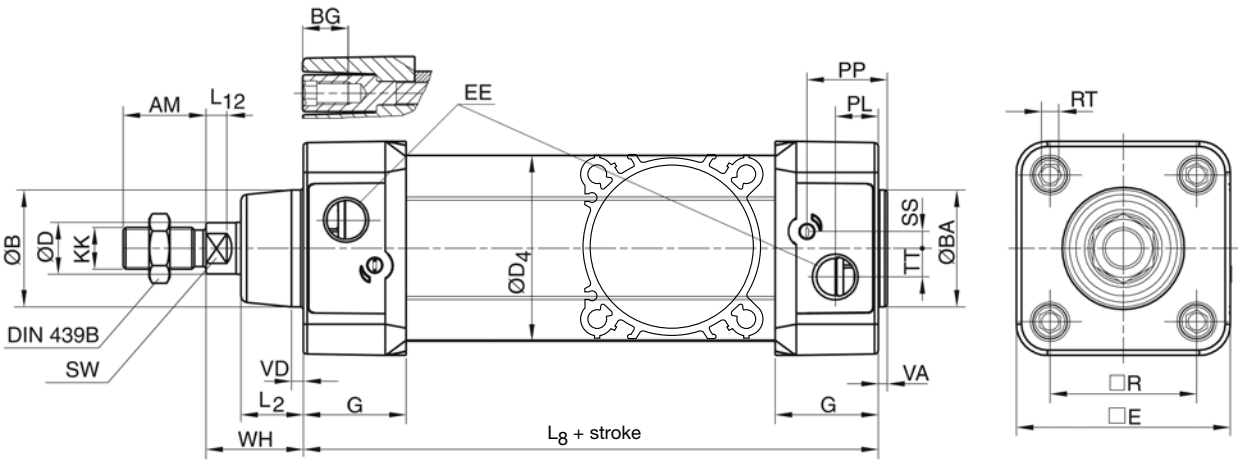

Internal piston rod thread **Through piston rod option for all versions**

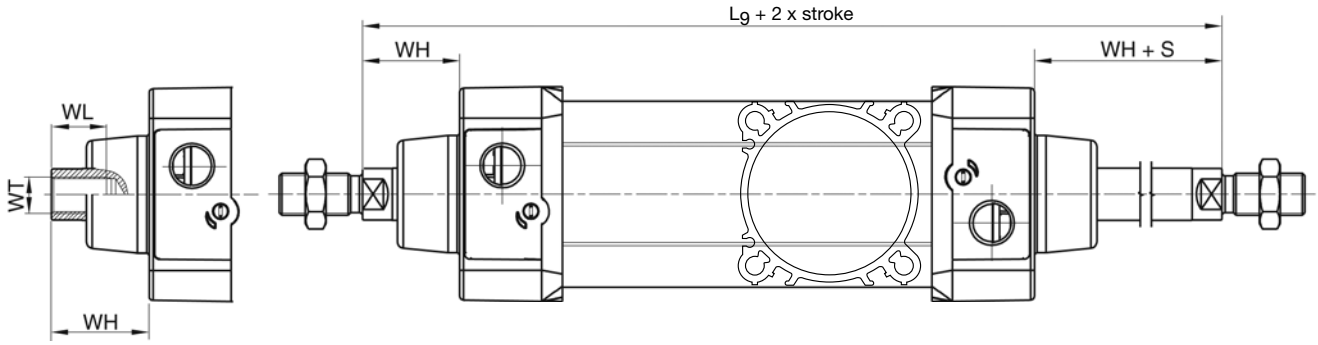

Dimensions (mm)

Cylinder bore mm	AM mm	B mm	BA mm	BG mm	D mm	D4 mm	E mm	EE mm	G mm	KK	L2 mm	L8 mm	L9 mm	L12 mm
32	22	30	30	16	12	45.0	50.0	G1/8	28.5	M10x1.25	16.0	94	146	6.0
40	24	35	35	16	16	52.0	57.4	G1/4	33.0	M12x1.25	19.0	105	165	6.5
50	32	40	40	16	20	60.7	69.4	G1/4	33.5	M16x1.5	24.0	106	180	8.0
63	32	45	45	16	20	71.5	82.4	G3/8	39.5	M16x1.5	24.0	121	195	8.0
80	40	45	45	17	25	86.7	99.4	G3/8	39.5	M20x1.5	30.0	128	220	10.0
100	40	55	55	17	25	106.7	116.0	G1/2	44.5	M20x1.5	32.4	138	240	14.0
125	54	60	60	20	32	134.0	139.0	G1/2	51.0	M27x2	45.0	160	290	18.0

Cylinder bore mm	PL mm	PP mm	R mm	RT	SS mm	SW mm	TT mm	VA mm	VD mm	WH mm	WL mm	WT
32	13.0	21.8	32.5	M6	4.0	10	4.5	3.5	4.5	26	21	M8x1
40	14.0	21.9	38.0	M6	8.0	13	5.5	3.5	4.5	30	23	M10x1.25
50	14.0	23.0	46.5	M8	4.0	17	7.5	3.5	5.0	37	31	M14x1.5
63	16.4	27.4	56.5	M8	6.5	17	11.0	3.5	5.0	37	31	M14x1.5
80	16.0	30.5	72.0	M10	0	22	15.0	3.5	4.0	46	39	M18x1.5
100	18.0	35.8	89.0	M10	0	22	20.0	3.5	4.0	51	39	M18x1.5
125	28.0	40.5	110.0	M12	0	27	17.5	5.5	6.0	65	53	M24x2

Tolerances (mm)

Cylinder bore mm	B	BA	L_8 mm	L_9 mm	R mm	Stroke tolerance up to stroke 500 mm	Stroke tolerance for stroke over 500 mm
32	d11	d11	±0.4	±2	±0.5	+0.3/+2.0	+0.3/+3.0
40	d11	d11	±0.7	±2	±0.5	+0.3/+2.0	+0.3/+3.0
50	d11	d11	±0.7	±2	±0.6	+0.3/+2.0	+0.3/+3.0
63	d11	d11	±0.8	±2	±0.7	+0.3/+2.0	+0.3/+3.0
80	d11	d11	±0.8	±3	±0.7	+0.3/+2.0	+0.3/+3.0
100	d11	d11	±1.0	±3	±0.7	+0.3/+2.0	+0.3/+3.0
125	d11	d11	±1.0	±3	±1.1	+0.3/+2.0	+0.3/+3.0

A clean external design of pneumatic cylinders is a request in more and more applications. It is always an advantage to able to keep the cylinders clean. Within the food and packaging industries this is a clear demand. However, also in various applications on vehicles and within the sawmill and bag-filling industries a clean design is also important.

Food approved grease
The initial lubrication of the P1D-C cylinder range is made with our proven grease approved for use in the food industry. This edible grease is used for all our standard cylinders.

Smooth, quiet operation and long service life
All seals and end-of-stroke washers are made from polyurethane (PUR), the bearings and piston are made from proven engineering plastics with excellent bearing properties and the initial greasing at the factory with a transparent, foodstuffs-approved grease. Altogether this gives the P1D very long service life and gentle, quiet operation.

Optimised cushioning
Thanks to the positive plastic cushioning screws and inserts in the end covers, each cylinder bore has been given an individual flow geometry. This gives an optimised cushioning, which is quicker and easier to set and adjust.

Dedicated plugs seal off end cover screw recesses
Normally 4 out of the 8 threads in the end cover screws are used for the installation. In order to seal off the threads not used, dedicated plugs are available. The collar of the head has a convex lip design and a rubber gasket is supplied with every plug. The plug is threaded into the end cover screw thread providing a high force and reliable sealing function. Assembled plugs seal against water intrusion as per IP67. These plugs are available as accessory in bags of 4.

P1D Pro Clean
(magnetic, with 2 T slots)
The P1D is available in a Pro Clean version, based on the same high level technology. This future-proof cylinder is the perfect choice for the food, packaging and conveying applications.

Mechanically protected sensor technology
The body extrusion has recessed only two sensor grooves on one side of the cylinder. The position of the T slots could be defined in the order code key. The sensors are of the ”drop-in” type, and are quickly and easily installed in the T-groove from the side. Both the cable and the sensor are protected in the groove. Choose a sensor with 3 or 10 m cable, 8 mm connector or the M12 connector.

”Drop-in” sensor
The P1D Pro Clean uses ”drop-in” P1D sensors. The body extrusion has 2 recessed sensor grooves on one side of the cylinder. The sensors are of the ”drop-in” type, and are quickly and easily installed in the T-grooves. Both the cable and the sensor are protected in the groove.

Dedicated threaded plugs in high strength plastics provides IP67 tightness. The external hexagon makes them easy to mount.

P1D Pro Clean with sensor function

This version is a P1D Pro Clean design with 2 T slots on one face of the tube giving then the possibility to add sensors. The cylinder has a clean design and is intended for applications where sensors still need to be used.

The P1D with the sensor function can of course be combined with other equipment and functions.

1	2	3	4	5	6	7	8	9	10	11	12	13	14	15
P	1	D	–	C	0	4	0	W	S	T*	0	2	5	0

Cylinder version	
C	Pro Clean

P1D Pro Clean with sensor function is defined by the letter C in position 5, and in position 11 by the position of the 2 T slots.
*** T on the top, - Y on the right, W on the bottom, V on the left side and the 15-digit order code.**
Note: cylinder is showed piston rod in the front and air ports on the top to determine face position.

T slots position for ordering

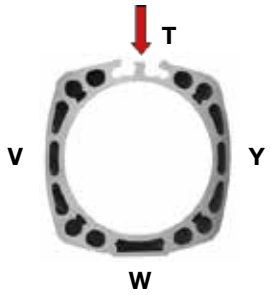

With 2 T slots on the top - FPM scraper, stainless steel end covers screws

Cyl. bore mm	Stroke mm	Order code
32 Conn. G1/8	25	**P1D-C032WST0025**
	40	**P1D-C032WST0040**
	50	**P1D-C032WST0050**
	80	**P1D-C032WST0080**
	100	**P1D-C032WST0100**
	125	**P1D-C032WST0125**
	160	**P1D-C032WST0160**
	200	**P1D-C032WST0200**
	250	**P1D-C032WST0250**
	320	**P1D-C032WST0320**
	400	**P1D-C032WST0400**
	500	**P1D-C032WST0500**
40 Conn. G1/4	25	**P1D-C040WST0025**
	40	**P1D-C040WST0040**
	50	**P1D-C040WST0050**
	80	**P1D-C040WST0080**
	100	**P1D-C040WST0100**
	125	**P1D-C040WST0125**
	160	**P1D-C040WST0160**
	200	**P1D-C040WST0200**
	250	**P1D-C040WST0250**
	320	**P1D-C040WST0320**
	400	**P1D-C040WST0400**
	500	**P1D-C040WST0500**
50 Conn. G1/4	25	**P1D-C050WST0025**
	40	**P1D-C050WST0040**
	50	**P1D-C050WST0050**
	80	**P1D-C050WST0080**
	100	**P1D-C050WST0100**
	125	**P1D-C050WST0125**
	160	**P1D-C050WST0160**
	200	**P1D-C050WST0200**
	250	**P1D-C050WST0250**
	320	**P1D-C050WST0320**
	400	**P1D-C050WST0400**
	500	**P1D-C050WST0500**

Cyl. bore mm	Stroke mm	Order code
63 Conn. G3/8	25	**P1D-C063WST0025**
	40	**P1D-C063WST0040**
	50	**P1D-C063WST0050**
	80	**P1D-C063WST0080**
	100	**P1D-C063WST0100**
	125	**P1D-C063WST0125**
	160	**P1D-C063WST0160**
	200	**P1D-C063WST0200**
	250	**P1D-C063WST0250**
	320	**P1D-C063WST0320**
	400	**P1D-C063WST0400**
	500	**P1D-C063WST0500**
80 Conn. G3/8	25	**P1D-C080WST0025**
	40	**P1D-C080WST0040**
	50	**P1D-C080WST0050**
	80	**P1D-C080WST0080**
	100	**P1D-C080WST0100**
	125	**P1D-C080WST0125**
	160	**P1D-C080WST0160**
	200	**P1D-C080WST0200**
	250	**P1D-C080WST0250**
	320	**P1D-C080WST0320**
	400	**P1D-C080WST0400**
	500	**P1D-C080WST0500**
100 Conn. G1/2	25	**P1D-C100WST0025**
	40	**P1D-C100WST0040**
	50	**P1D-C100WST0050**
	80	**P1D-C100WST0080**
	100	**P1D-C100WST0100**
	125	**P1D-C100WST0125**
	160	**P1D-C100WST0160**
	200	**P1D-C100WST0200**
	250	**P1D-C100WST0250**
	320	**P1D-C100WST0320**
	400	**P1D-C100WST0400**
	500	**P1D-C100WST0500**

Cyl. bore mm	Stroke mm	Order code
125 Conn. G1/2	25	**P1D-C125WST0025**
	40	**P1D-C125WST0040**
	50	**P1D-C125WST0050**
	80	**P1D-C125WST0080**
	100	**P1D-C125WST0100**
	125	**P1D-C125WST0125**
	160	**P1D-C125WST0160**
	200	**P1D-C125WST0200**
	250	**P1D-C125WST0250**
	320	**P1D-C125WST0320**
	400	**P1D-C125WST0400**
	500	**P1D-C125WST0500**

The cylinders are supplied complete with one stainless steel piston rod nut as standard.

Sealing plugs for end cover screws

See page 52

P1D Pro Clean (with 2 T slots for sensors)

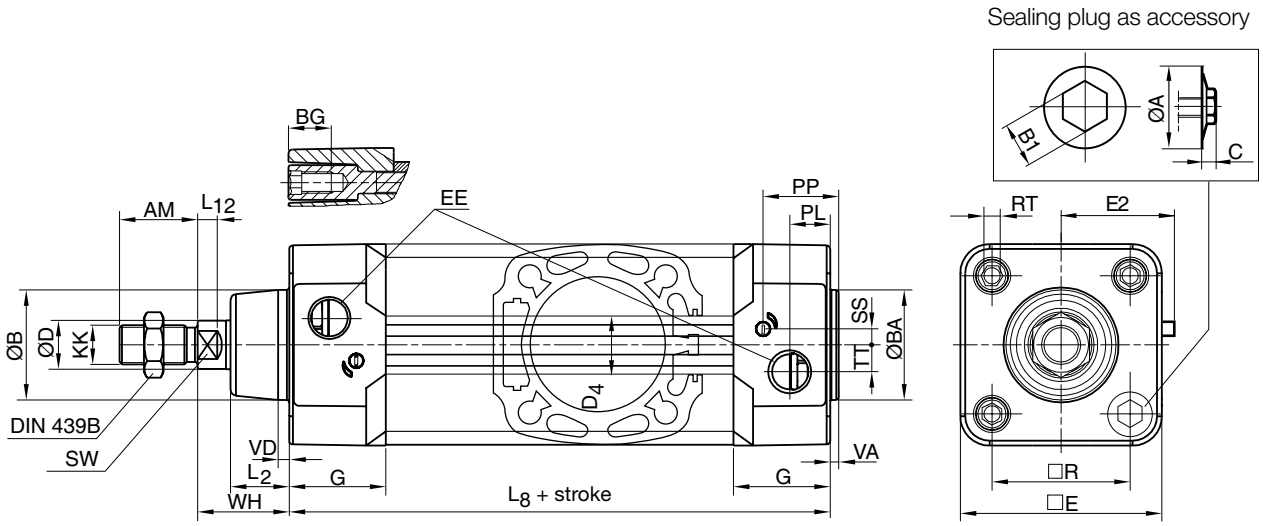

Dimensions (mm)

Cylinder bore mm	AM mm	B mm	BA mm	BG mm	D mm	D4 mm	E mm	EE mm	G mm	KK	L2 mm	L8 mm	L9 mm	L12 mm
32	22	30	30	16	12	45.0	50.0	G1/8	28.5	M10x1.25	16.0	94	146	6.0
40	24	35	35	16	16	52.0	57.4	G1/4	33.0	M12x1.25	19.0	105	165	6.5
50	32	40	40	16	20	60.7	69.4	G1/4	33.5	M16x1.5	24.0	106	180	8.0
63	32	45	45	16	20	71.5	82.4	G3/8	39.5	M16x1.5	24.0	121	195	8.0
80	40	45	45	17	25	86.7	99.4	G3/8	39.5	M20x1.5	30.0	128	220	10.0
100	40	55	55	17	25	106.7	116.0	G1/2	44.5	M20x1.5	32.4	138	240	14.0
125	54	60	60	20	32	134.0	139.0	G1/2	51.0	M27x2	45.0	160	290	18.0

Cylinder bore mm	PL mm	PP mm	R mm	RT	SS mm	SW mm	TT mm	VA mm	VD mm	WH mm	WL mm	WT
32	13.0	21.8	32.5	M6	4.0	10	4.5	3.5	4.5	26	21	M8x1
40	14.0	21.9	38.0	M6	8.0	13	5.5	3.5	4.5	30	23	M10x1.25
50	14.0	23.0	46.5	M8	4.0	17	7.5	3.5	5.0	37	31	M14x1.5
63	16.4	27.4	56.5	M8	6.5	17	11.0	3.5	5.0	37	31	M14x1.5
80	16.0	30.5	72.0	M10	0	22	15.0	3.5	4.0	46	39	M18x1.5
100	18.0	35.8	89.0	M10	0	22	20.0	3.5	4.0	51	39	M18x1.5
125	28.0	40.5	110.0	M12	0	27	17.5	5.5	6.0	65	53	M24x2

Tolerances (mm)

Cylinder bore mm	B	BA	L_8 mm	R mm	Stroke tolerance up to stroke 500 mm	Stroke tolerance for stroke over 500 mm
32	d11	d11	±0.4	±0.5	+0.3/+2.0	+0.3/+3.0
40	d11	d11	±0.7	±0.5	+0.3/+2.0	+0.3/+3.0
50	d11	d11	±0.7	±0.6	+0.3/+2.0	+0.3/+3.0
63	d11	d11	±0.8	±0.7	+0.3/+2.0	+0.3/+3.0
80	d11	d11	±0.8	±0.7	+0.3/+2.0	+0.3/+3.0
100	d11	d11	±1.0	±0.7	+0.3/+2.0	+0.3/+3.0
125	d11	d11	±1.0	±1.1	+0.3/+2.0	+0.3/+3.0

P1D with valve built on

The valve series is the robust and compact Viking Xtreme series, with product code P2LAX (for cylinder bores 32-63), P2LBX (for cylinder bores 80-100) and P2LDX (for cylinder bore 125). This valve series was specially designed for harsh environments and a long service life. The valve is securely fitted to a fixing plate bolted onto the cylinder barrel. The unit is delivered complete with valve, Prestolok push-in connection in nickel plated brass, and hosing. The valve has built-in silencers (Siflow for speed regulation), and electrically-operated versions have solenoid valves (P2E with spring-loaded manual override) and a cable head with LED and spark dispersion. The supply voltage is 24V for AC as well as DC versions. This UC (Universal Current) is possible because of a built-in rectifier in the cable head, allowing the use of direct current and alternating current for actuation. Of course, the entire range of P1D accessories can also be used for the P1D with built-in valve, and cylinders can be ordered with factory-fitted accessories and sensors.

Fast response

The large flow capacity of the valve and the short distance between the valve and the cylinder ports mean that the working unit operates quickly (short actuation time and with minimal flow restriction).

No maintenance and easy to service

The working unit is built from standard components.
The cylinders and the valves are designed to be used without supplementary lubrication.

Note that cylinder diameters 32-63 use valve P2LAX (1/8"), diameters 80-100 use P2LBX (1/4"), and diameter 125 uses P2LDX (1/2"). This version of the cylinder can of course be combined with factory-fitted cylinder accessories, piston rod accessories and sensors. Fixing plates for different valve sizes may be ordered separately.

Technical data

Working pressure	max 10 bar
Working media	dry filtered compressed air.
Working temperature:	–15 °C to +60 °C
Flow, P2LAX, acc. to ISO 6358	Qn = 720 Nl/min
Flow, P2LBX, acc. to ISO 6358	Qn = 1290 Nl/min
Flow, P2LDX, acc. to ISO 6358	Qn = 2650 Nl/min

Material specification

Valves[1)]	
Housing and ends	Anodised aluminium
Solenoid valves	
Housing	Polyamide
Magnet coil	Epoxy coated
Fixing plate	Anodised aluminium
Fixing screws for plate	Stainless steel
Fixing screws for valve	Zinc-coated steel
Angle connections	Nickel-coated brass
Plastic tubes	PUR

Accessories

Name	Order code
Siflow silencer for P2LAX valve, G1/8	**9301050901**
Sintered plastic silencer for P2LAX valve, G1/8	**P6M-PAB1**
Siflow silencer for P2LBX valve, G1/4	**9301050902**
Sintered plastic silencer for P2LBX valve, G1/4	**P6M-PAB2**
Siflow silencer for P2LDX valve, G1/2	**9301050904**
Sintered plastic silencer for P2LDX valve, G1/2	**P6M-PAB4**
Fixing plate for Ø32 - Ø63, valve P2LAX, -BX	**9121742111**
Fixing plate for Ø80, Ø100, valve P2LAX,-BX, -DX	**9121742112**
Fixing plate for Ø125, valve P2LAX,-BX, -DX	**9121742113**

Part numbers are here above given as spare parts or to add a valve on a P1D-S Standard by yourself.

1) see also catalogue for P2L series Viking valves

P1D-V with valve built on

P1D Standard can be ordered with a factory-fitted valve and tubing. The complete working unit can be used in silo applications, for operating flaps and valves, in sawmills and in many similar installations in which the cylinders are scattered or the fast actuation is important. The unit with the valve installed is compact, so it can also be used in small spaces.

A 20-character order number is used to order the P1D Standard with factory fitted valve. Position 5 indicates the cylinder version, with the actuation type in position 11 and the valve type in position 20.

1	2	3	4	5	6	7	8	9	10	11	12	13	14	15	16	17	18	19	20
P	1	D	-	V	0	5	0	M	S	1	0	3	2	0	N	N	N	N	F

Cylinder version

V	Standard with factory fitted valve

Factory fitted valve type

0	Air actuated
1	Electrically actuated 24 V UC, LED+VDR (AC/DC Universal Current) Complete with rectifier
2	Electrically actuated 115 V/50 Hz, 120 V/60 Hz, LED+VDR
3	Electrically actuated 230 V/50 Hz, 240 V/60 Hz, LED+VDR
4	Electrically actuated 24 V UC, LED+VDR with 5 m integral cable (AC/DC Universal Current) Complete with rectifier
7	Electrically actuated 24 V UC, LED+VDR with 10 m integral cable (AC/DC Universal Current) Complete with rectifier

Valve function

Air actuated (digit 11: 0)	
A	Air-Air, 5/2
B	Air-Spring, 5/2
C	Air-Air, 5/3, closed centre position
D	Air-Air, 5/3, vented centre
E	Air-Air, 5/3, pressurised centre
Electrically actuated internal supply	
F	Elec-Elec, 5/2
H	Elec-Spring, 5/2
K	Spring-Elec*, 5/2
M	Elec-Elec, 5/3, closed centre position
Q	Elec-Elec, 5/3, vented centre
S	Elec-Elec, 5/3, pressurised centre

For P1D-V with trunnion option please consult your local sales support

* Piston rod in extended position with unactuated valve

P1D Profile, electrically actuated 24V UC, 5/2 valve Electric / Electric function

Cyl. bore mm	Stroke mm	Order code
32 Conn. G1/8	25	**P1D-V032MS10025NNNNF**
	40	**P1D-V032MS10040NNNNF**
	50	**P1D-V032MS10050NNNNF**
	80	**P1D-V032MS10080NNNNF**
	100	**P1D-V032MS10100NNNNF**
	125	**P1D-V032MS10125NNNNF**
	160	**P1D-V032MS10160NNNNF**
	200	**P1D-V032MS10200NNNNF**
	250	**P1D-V032MS10250NNNNF**
	320	**P1D-V032MS10320NNNNF**
	400	**P1D-V032MS10400NNNNF**
	500	**P1D-V032MS10500NNNNF**
40 Conn. G1/4	25	**P1D-V040MS10025NNNNF**
	40	**P1D-V040MS10040NNNNF**
	50	**P1D-V040MS10050NNNNF**
	80	**P1D-V040MS10080NNNNF**
	100	**P1D-V040MS10100NNNNF**
	125	**P1D-V040MS10125NNNNF**
	160	**P1D-V040MS10160NNNNF**
	200	**P1D-V040MS10200NNNNF**
	250	**P1D-V040MS10250NNNNF**
	320	**P1D-V040MS10320NNNNF**
	400	**P1D-V040MS10400NNNNF**
	500	**P1D-V040MS10500NNNNF**
50 Conn. G1/4	25	**P1D-V050MS10025NNNNF**
	40	**P1D-V050MS10040NNNNF**
	50	**P1D-V050MS10050NNNNF**
	80	**P1D-V050MS10080NNNNF**
	100	**P1D-V050MS10100NNNNF**
	125	**P1D-V050MS10125NNNNF**
	160	**P1D-V050MS10160NNNNF**
	200	**P1D-V050MS10200NNNNF**
	250	**P1D-V050MS10250NNNNF**
	320	**P1D-V050MS10320NNNNF**
	400	**P1D-V050MS10400NNNNF**
	500	**P1D-V050MS10500NNNNF**

Cyl. bore mm	Stroke mm	Order code
63 Conn. G3/8	25	**P1D-V063MS10025NNNNF**
	40	**P1D-V063MS10040NNNNF**
	50	**P1D-V063MS10050NNNNF**
	80	**P1D-V063MS10080NNNNF**
	100	**P1D-V063MS10100NNNNF**
	125	**P1D-V063MS10125NNNNF**
	160	**P1D-V063MS10160NNNNF**
	200	**P1D-V063MS10200NNNNF**
	250	**P1D-V063MS10250NNNNF**
	320	**P1D-V063MS10320NNNNF**
	400	**P1D-V063MS10400NNNNF**
	500	**P1D-V063MS10500NNNNF**
80 Conn. G3/8	25	**P1D-V080MS10025NNNNF**
	40	**P1D-V080MS10040NNNNF**
	50	**P1D-V080MS10050NNNNF**
	80	**P1D-V080MS10080NNNNF**
	100	**P1D-V080MS10100NNNNF**
	125	**P1D-V080MS10125NNNNF**
	160	**P1D-V080MS10160NNNNF**
	200	**P1D-V080MS10200NNNNF**
	250	**P1D-V080MS10250NNNNF**
	320	**P1D-V080MS10320NNNNF**
	400	**P1D-V080MS10400NNNNF**
	500	**P1D-V080MS10500NNNNF**
100 Conn. G1/2	25	**P1D-V100MS10025NNNNF**
	40	**P1D-V100MS10040NNNNF**
	50	**P1D-V100MS10050NNNNF**
	80	**P1D-V100MS10080NNNNF**
	100	**P1D-V100MS10100NNNNF**
	125	**P1D-V100MS10125NNNNF**
	160	**P1D-V100MS10160NNNNF**
	200	**P1D-V100MS10200NNNNF**
	250	**P1D-V100MS10250NNNNF**
	320	**P1D-V100MS10320NNNNF**
	400	**P1D-V100MS10400NNNNF**
	500	**P1D-V100MS10500NNNNF**

Cyl. bore mm	Stroke mm	Order code
125 Conn. G1/2	25	**P1D-V125MS10025NNNNF**
	40	**P1D-V125MS10040NNNNF**
	50	**P1D-V125MS10050NNNNF**
	80	**P1D-V125MS10080NNNNF**
	100	**P1D-V125MS10100NNNNF**
	125	**P1D-V125MS10125NNNNF**
	160	**P1D-V125MS10160NNNNF**
	200	**P1D-V125MS10200NNNNF**
	250	**P1D-V125MS10250NNNNF**
	320	**P1D-V125MS10320NNNNF**
	400	**P1D-V125MS10400NNNNF**
	500	**P1D-V125MS10500NNNNF**

The cylinders are supplied complete with one zinc plated steel piston rod nut.

P1D with built on valve

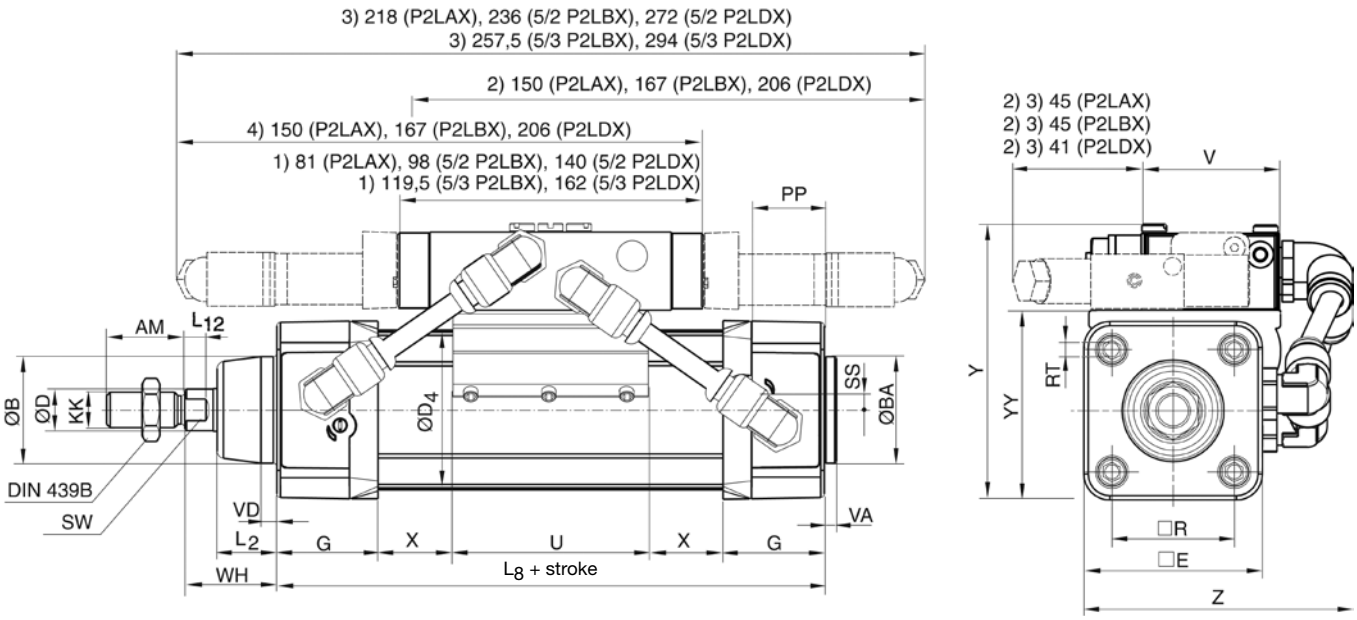

Dimensions (mm)

Cylinder bore mm	AM mm	B mm	BA mm	BG mm	D mm	D4 mm	E mm	G mm	KK	L2 mm	L8 mm	L12 mm	PP mm	R mm
32	22	30	30	16	12	45.0	50.0	28.5	M10x1.25	16.0	94	6.0	21.8	32.5
40	24	35	35	16	16	52.0	57.4	33.0	M12x1.25	19.0	105	6.5	21.9	38.0
50	32	40	40	16	20	60.7	69.4	33.5	M16x1.5	24.0	106	8.0	23.0	46.5
63	32	45	45	16	20	71.5	82.4	39.5	M16x1.5	24.0	121	8.0	27.4	56.5
80	40	45	45	17	25	86.7	99.4	39.5	M20x1.5	30.0	128	10.0	30.5	72.0
100	40	55	55	17	25	106.7	116.0	44.5	M20x1.5	32.4	138	14.0	35.8	89.0
125	54	60	60	20	32	134.0	139.0	51.0	M27x2	45.0	160	18.0	40.5	110.0

Cylinder bore mm	RT	SS mm	SW mm	VA mm	VD mm	WH mm	U mm	V mm	X mm	Y mm	YY mm	Z mm	ZZ mm
32	M6	4.0	10	3.5	4.5	26	55	40	-9+S/2	80	56	80	90
40	M6	8.0	13	3.5	4.5	30	55	40	-8+S/2	88	64	87	96
50	M8	4.0	17	3.5	5.0	37	55	40	-8+S/2	102	78	96	105
63	M8	6.5	17	3.5	5.0	37	55	40	-6.5+S/2	109	85	107	116
80	M10	0	22	3.5	4.0	46	55	40	-2.5+S/2	127	102	132	125
100	M10	0	22	3.5	4.0	51	55	40	-2.5+S/2	142	117	148	140
125	M12	0	27	5.5	6.0	65	55	48	2+S/2	180	146	183	159

1) Air actuated 5/2 and 5/3
2) Electrically actuated 5/2 with spring return
3) Electrically actuated 5/2 and 5/3 (2 solenoid valves)
4) Electrically actuated 5/2 with spring return(reverse function)

P2LAX Ø32 - Ø63 mm
P2LBX Ø80 - Ø100 mm
P2LDX Ø125 mm

Tolerances (mm)

Cylinder bore mm	B	BA mm	L_8 mm	R mm	Stroke tolerance up to stroke 500 mm	Stroke tolerance for stroke over 500 mm
32	d11	d11	±0.4	±0.5	+0.3/+2.0	+0.3/+3.0
40	d11	d11	±0.7	±0.5	+0.3/+2.0	+0.3/+3.0
50	d11	d11	±0.7	±0.6	+0.3/+2.0	+0.3/+3.0
63	d11	d11	±0.8	±0.7	+0.3/+2.0	+0.3/+3.0
80	d11	d11	±0.8	±0.7	+0.3/+2.0	+0.3/+3.0
100	d11	d11	±1.0	±0.7	+0.3/+2.0	+0.3/+3.0
125	d11	d11	±1.0	±1.1	+0.3/+2.0	+0.3/+3.0

P1D-L

Clean and compact design

The front end piece and lock unit form an integrated block, keeping the length of the structure short. The design is easy to clean, sealed and waterproof. The exhaust air from the lock unit can be removed by replacing the filter unit with a connector and hose. This is an advantage in terms of cleaning or when environmental factors are important.

Locking and braking

The static locking force corresponds to 7 bar pressure. Under certain circumstances, the lock can also be used as a brake for positioning or similar applications. The maximum values set out in the graph must not be exceeded.

Function on pressure loss

The piston rod lock can be used in all material handling systems where controlled fastening or positioning is required. The piston rod lock is also suitable for use as a pressure-loss brake for cylinders with suspended loads, for example. See lock forces. The signal air to the lock unit can be connected directly to the air system or to the supply air for the valve controlling the cylinder in question. For controlled on/off operation of the lock unit, a separate valve, with large exhaust flow capacity, is used.

Technical data

Working pressure	max 10 bar
Working media	dry filtered compressed air
Working temperature	–20 °C to +80 °C
Release pressure [1]	min 4 bar ± 10%

1) Signal pressure to inlet port of lock unit.

Static lock forces

Lock forces at 0 bar signal pressure to lock unit

Cylinder dia. mm	Lock force N
32	550
40	860
50	1345
63	2140
80	3450
100	5390
125	8425

Material specification, piston rod locking

Housing/end piece	Black anodised aluminium
Lock collar/piston	Hardened steel
Springs	Stainless steel
Piston rod seal Dim 32-40	UHMWPE plastic
Piston rod seal Dim 50-125	Polyurethane
O-rings	Nitrile rubber, NBR
Scraper ring	Polyurethane
Air filter	Brass/sintered bronze

Other data as for relevant base cylinder.

The cylinders are supplied with a hard chrome plated piston rod.

Note!
If rod guidance module is to be fitted, the piston rod must be extended to provide the same WH dimensions as for the P1D base cylinder.

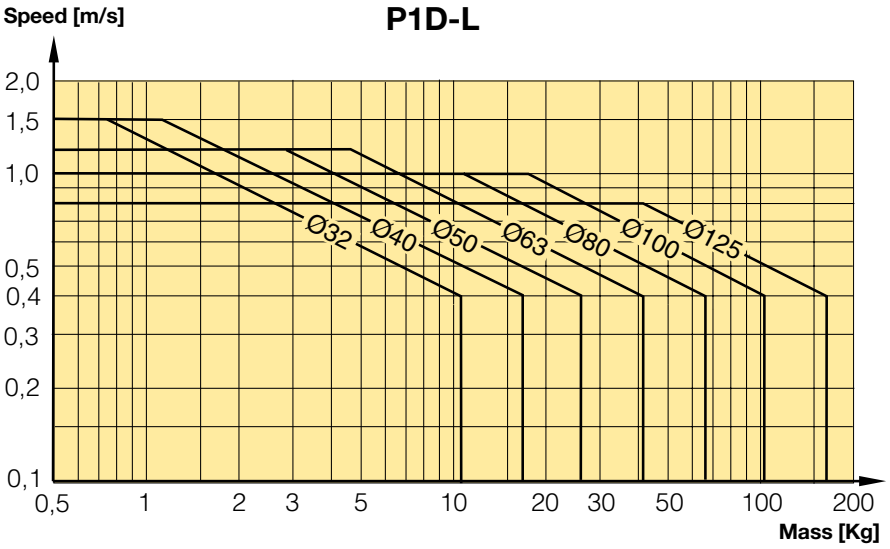

Use as a brake

The table shows the maximum values for speed and braking mass if the cylinder is used as a brake. The cylinder should not be exposed to additional compressive forces as this significantly reduces the external mass that can be braked.
We recommend system solutions as shown in the pneumatic circuits (Fastening in position) or similar, in which the cylinder does not act as a motor during braking. Heat is generated if the brake is used frequently, and this must be taken into account to ensure that the maximum temperature is not exceeded.

P1D cylinder with piston rod locking

The P1D cylinder is available in a version with piston rod locking, allowing the piston rod to be locked in any position. The lock unit, of the air/spring actuated type, is integrated in the front end piece of the cylinder. With no signal pressure, the full force of the lock is applied to the piston rod, and the lock is released at 4 bar signal pressure. Lock units are available in bores 32-125 mm. Of course, the entire range of P1D accessories can also be used for the locking cylinder. However, the lock unit increases the overall length of the cylinder. Not certifed for used in safety systems.

Cyl. bore mm	Stroke mm	Order code
32 Conn. G1/8	25	**P1D-L032MC-0025**
	40	**P1D-L032MC-0040**
	50	**P1D-L032MC-0050**
	80	**P1D-L032MC-0080**
	100	**P1D-L032MC-0100**
	125	**P1D-L032MC-0125**
	160	**P1D-L032MC-0160**
	200	**P1D-L032MC-0200**
	250	**P1D-L032MC-0250**
	320	**P1D-L032MC-0320**
	400	**P1D-L032MC-0400**
	500	**P1D-L032MC-0500**
40 Conn. G1/4	25	**P1D-L040MC-0025**
	40	**P1D-L040MC-0040**
	50	**P1D-L040MC-0050**
	80	**P1D-L040MC-0080**
	100	**P1D-L040MC-0100**
	125	**P1D-L040MC-0125**
	160	**P1D-L040MC-0160**
	200	**P1D-L040MC-0200**
	250	**P1D-L040MC-0250**
	320	**P1D-L040MC-0320**
	400	**P1D-L040MC-0400**
	500	**P1D-L040MC-0500**
50 Conn. G1/4	25	**P1D-L050MC-0025**
	40	**P1D-L050MC-0040**
	50	**P1D-L050MC-0050**
	80	**P1D-L050MC-0080**
	100	**P1D-L050MC-0100**
	125	**P1D-L050MC-0125**
	160	**P1D-L050MC-0160**
	200	**P1D-L050MC-0200**
	250	**P1D-L050MC-0250**
	320	**P1D-L050MC-0320**
	400	**P1D-L050MC-0400**
	500	**P1D-L050MC-0500**
63 Conn. G3/8	25	**P1D-L063MC-0025**
	40	**P1D-L063MC-0040**
	50	**P1D-L063MC-0050**
	80	**P1D-L063MC-0080**
	100	**P1D-L063MC-0100**
	125	**P1D-L063MC-0125**
	160	**P1D-L063MC-0160**
	200	**P1D-L063MC-0200**
	250	**P1D-L063MC-0250**
	320	**P1D-L063MC-0320**
	400	**P1D-L063MC-0400**
	500	**P1D-L063MC-0500**

Cyl. bore mm	Stroke mm	Order code
80 Conn. G3/8	25	**P1D-L080MC-0025**
	40	**P1D-L080MC-0040**
	50	**P1D-L080MC-0050**
	80	**P1D-L080MC-0080**
	100	**P1D-L080MC-0100**
	125	**P1D-L080MC-0125**
	160	**P1D-L080MC-0160**
	200	**P1D-L080MC-0200**
	250	**P1D-L080MC-0250**
	320	**P1D-L080MC-0320**
	400	**P1D-L080MC-0400**
	500	**P1D-L080MC-0500**
100 Conn. G1/2	25	**P1D-L100MC-0025**
	40	**P1D-L100MC-0040**
	50	**P1D-L100MC-0050**
	80	**P1D-L100MC-0080**
	100	**P1D-L100MC-0100**
	125	**P1D-L100MC-0125**
	160	**P1D-L100MC-0160**
	200	**P1D-L100MC-0200**
	250	**P1D-L100MC-0250**
	320	**P1D-L100MC-0320**
	400	**P1D-L100MC-0400**
	500	**P1D-L100MC-0500**
125 Conn. G1/2	25	**P1D-L125MC-0025**
	40	**P1D-L125MC-0040**
	50	**P1D-L125MC-0050**
	80	**P1D-L125MC-0080**
	100	**P1D-L125MC-0100**
	125	**P1D-L125MC-0125**
	160	**P1D-L125MC-0160**
	200	**P1D-L125MC-0200**
	250	**P1D-L125MC-0250**
	320	**P1D-L125MC-0320**
	400	**P1D-L125MC-0400**
	500	**P1D-L125MC-0500**

The cylinders are supplied complete with one zinc plated steel piston rod nut.

P1D-L

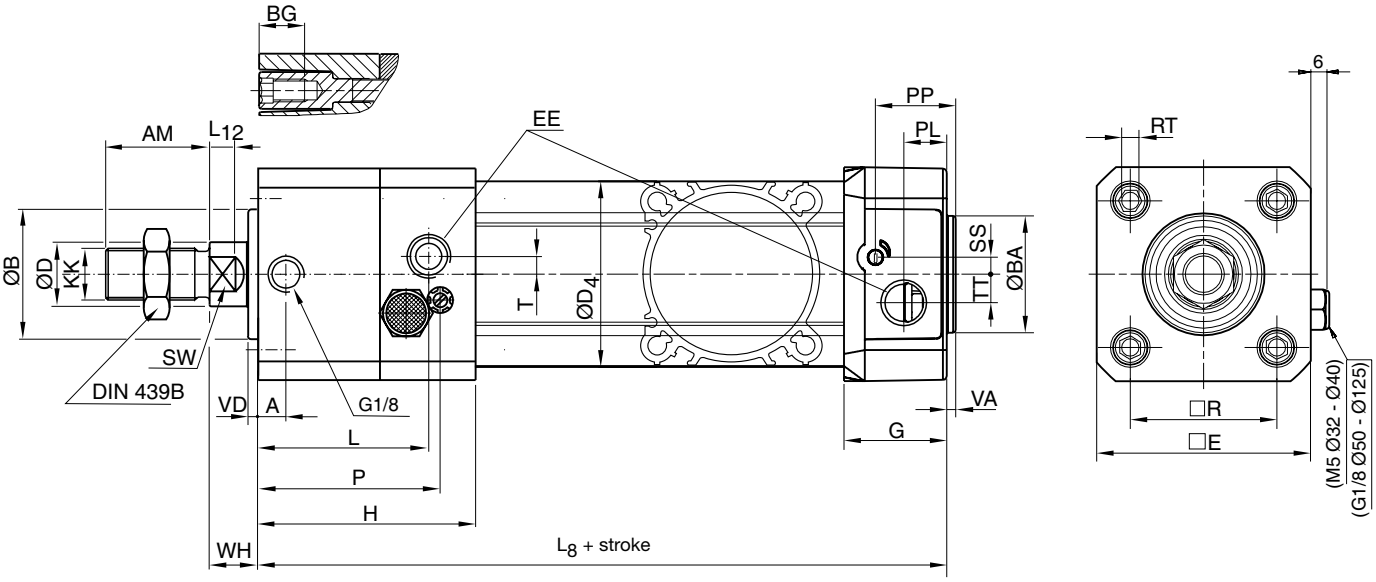

Dimensions (mm)

Cylinder bore mm	A mm	AM mm	B mm	BA mm	BG mm	D mm	D4 mm	E mm	EE mm	G mm	H mm	KK mm	L mm
32	18,5	22	30	30	16	12	45,0	50,0	G1/8	28,5	71,0	M10x1,25	53,0
40	20,0	24	35	35	16	16	52,0	57,4	G1/4	33,0	76,5	M12x1,25	56,0
50	21,0	32	40	40	16	20	60,7	69,4	G1/4	33,5	80,0	M16x1,5	65,0
63	30,0	32	45	45	16	20	71,5	82,4	G3/8	39,5	96,0	M16x1,5	76,5
80	35,0	40	45	45	17	25	86,7	99,4	G3/8	39,5	110,0	M20x1,5	89,0
100	54,0	40	55	55	17	25	106,7	116,0	G1/2	44,5	132,0	M20x1,5	112,0
125	65,5	54	60	60	20	32	134,0	139,0	G1/2	51,0	144,5	M27x2	124,5

Cylinder bore mm	L8 mm	L12 mm	P mm	PL mm	PP mm	R mm	RT	SS mm	SW mm	T mm	TT mm	VA mm	VD mm	WH * mm
32	137	6,0	63,0	13,0	21,8	32,5	M6	4,0	10	4,5	4,5	3,5	4,5	15
40	149	6,5	67,5	14,0	21,9	38,0	M6	8,0	13	3,0	5,5	3,5	4,5	16
50	153	8,0	71,0	14,0	23,0	46,5	M8	4,0	17	5,5	7,5	3,5	5,0	17
63	178	8,0	87,0	16,4	27,4	56,5	M8	6,5	17	3,0	11,0	3,5	5,0	17
80	199	10,0	101,0	16,0	30,5	72,0	M10	0	22	6,0	15,0	3,5	4,0	20
100	226	14,0	122,0	18,0	35,8	89,0	M10	0	22	6,0	20,0	3,5	4,0	20
125	254	18,0	134,5	28,0	40,5	110,0	M12	0	27	6,0	17,5	5,5	6,0	27

* WH is shorter than the ISO WH dimension without rod lock unit

Tolerances (mm)

Cylinder bore mm	B	BA mm	L_8 mm	R mm	Stroke tolerance up to stroke 500 mm	Stroke tolerance for stroke over 500 mm
32	d11	d11	±0,4	±0,5	+0,3/+2,0	+0,3/+3,0
40	d11	d11	±0,7	±0,5	+0,3/+2,0	+0,3/+3,0
50	d11	d11	±0,7	±0,6	+0,3/+2,0	+0,3/+3,0
63	d11	d11	±0,8	±0,7	+0,3/+2,0	+0,3/+3,0
80	d11	d11	±0,8	±0,7	+0,3/+2,0	+0,3/+3,0
100	d11	d11	±1,0	±0,7	+0,3/+2,0	+0,3/+3,0
125	d11	d11	±1,0	±1,1	+0,3/+2,0	+0,3/+3,0

P1D-H

Function on pressure loss

The piston rod lock can be used in all material handling systems where controlled fastening or positioning is required. The signal air to the lock unit can be connected directly to the air system or to the supply air for the valve controlling the cylinder in question. For controlled on/ off operation of the lock unit, a separate valve, with large exhaust flow capacity, is used.

Technical data

Working pressure	max 10 bar
Working media	dry filtered compressed air.
Working temperature:	–20 °C to +80 °C
Release pressure[1)]	> 4 bar

1) Signal pressure to inlet port of lock unit.

Material specification, piston rod locking

Housing	Black anodised aluminium
Carriage	Black anodised aluminium
Lock collar	Brass
Springs	Stainless steel

Other data as for relevant base cylinder.

The cylinders are supplied with a hard chrome plated piston rod.

Static lock forces

Lock forces at 0 bar signal pressure lock unit

Cylinder dia. mm	Lock force N
32	600
40	1000
50	1500
63	2200
80	3000
100	5000
125	7500

Separate Rod Locking

Separate Rod Locking to be mounted on a standard P1D.
The cylinder need to have extended piston rod.
Note! Chrome plated piston rod must be used.

Cyl. bore Ø mm	Rod Ø mm	Rod extension mm	Weight kg	**Order code**
32	12	**48**	0,60	**KC 8227**
40	16	**55**	0,80	**KC 8228**
50	20	**70**	1,00	**KC 8229**
63	20	**70**	1,20	**KC 8230**
80	25	**90**	1,40	**KC 8231**
100	25	**92**	1,60	**KC 8232**
125	32	**122**	1,80	**KC 8233**

P1D cylinder with static piston rod locking

The P1D cylinder is available in a version with piston rod locking, allowing the piston rod to be locked in any position. The lock unit, of the air/spring actuated type. With no signal pressure, the full force of the lock is applied to the piston rod, and the lock is released at 4 bar signal pressure. Lock units are available for P1D Standard, in bores 32-125 mm. Of course, the entire range of P1D accessories can also be used for the locking cylinder, which can be ordered with factory fitted accessories, sensors. However, the lock unit increases the overall length of the cylinder.
Not certified for used in safety systems.

Cyl. bore mm	Stroke mm	Order code
32 Conn. G1/8	25	**P1D-H032MC-0025**
	40	**P1D-H032MC-0040**
	50	**P1D-H032MC-0050**
	80	**P1D-H032MC-0080**
	100	**P1D-H032MC-0100**
	125	**P1D-H032MC-0125**
	160	**P1D-H032MC-0160**
	200	**P1D-H032MC-0200**
	250	**P1D-H032MC-0250**
	320	**P1D-H032MC-0320**
	400	**P1D-H032MC-0400**
	500	**P1D-H032MC-0500**
40 Conn. G1/4	25	**P1D-H040MC-0025**
	40	**P1D-H040MC-0040**
	50	**P1D-H040MC-0050**
	80	**P1D-H040MC-0080**
	100	**P1D-H040MC-0100**
	125	**P1D-H040MC-0125**
	160	**P1D-H040MC-0160**
	200	**P1D-H040MC-0200**
	250	**P1D-H040MC-0250**
	320	**P1D-H040MC-0320**
	400	**P1D-H040MC-0400**
	500	**P1D-H040MC-0500**
50 Conn. G1/4	25	**P1D-H050MC-0025**
	40	**P1D-H050MC-0040**
	50	**P1D-H050MC-0050**
	80	**P1D-H050MC-0080**
	100	**P1D-H050MC-0100**
	125	**P1D-H050MC-0125**
	160	**P1D-H050MC-0160**
	200	**P1D-H050MC-0200**
	250	**P1D-H050MC-0250**
	320	**P1D-H050MC-0320**
	400	**P1D-H050MC-0400**
	500	**P1D-H050MC-0500**
63 Conn. G3/8	25	**P1D-H063MC-0025**
	40	**P1D-H063MC-0040**
	50	**P1D-H063MC-0050**
	80	**P1D-H063MC-0080**
	100	**P1D-H063MC-0100**
	125	**P1D-H063MC-0125**
	160	**P1D-H063MC-0160**
	200	**P1D-H063MC-0200**
	250	**P1D-H063MC-0250**
	320	**P1D-H063MC-0320**
	400	**P1D-H063MC-0400**
	500	**P1D-H063MC-0500**

Cyl. bore mm	Stroke mm	Order code
80 Conn. G3/8	25	**P1D-H080MC-0025**
	40	**P1D-H080MC-0040**
	50	**P1D-H080MC-0050**
	80	**P1D-H080MC-0080**
	100	**P1D-H080MC-0100**
	125	**P1D-H080MC-0125**
	160	**P1D-H080MC-0160**
	200	**P1D-H080MC-0200**
	250	**P1D-H080MC-0250**
	320	**P1D-H080MC-0320**
	400	**P1D-H080MC-0400**
	500	**P1D-H080MC-0500**
100 Conn. G1/2	25	**P1D-H100MC-0025**
	40	**P1D-H100MC-0040**
	50	**P1D-H100MC-0050**
	80	**P1D-H100MC-0080**
	100	**P1D-H100MC-0100**
	125	**P1D-H100MC-0125**
	160	**P1D-H100MC-0160**
	200	**P1D-H100MC-0200**
	250	**P1D-H100MC-0250**
	320	**P1D-H100MC-0320**
	400	**P1D-H100MC-0400**
	500	**P1D-H100MC-0500**
125 Conn. G1/2	25	**P1D-H125MC-0025**
	40	**P1D-H125MC-0040**
	50	**P1D-H125MC-0050**
	80	**P1D-H125MC-0080**
	100	**P1D-H125MC-0100**
	125	**P1D-H125MC-0125**
	160	**P1D-H125MC-0160**
	200	**P1D-H125MC-0200**
	250	**P1D-H125MC-0250**
	320	**P1D-H125MC-0320**
	400	**P1D-H125MC-0400**
	500	**P1D-H125MC-0500**

The cylinders are supplied complete with one zinc plated steel piston rod nut.

P1D-H

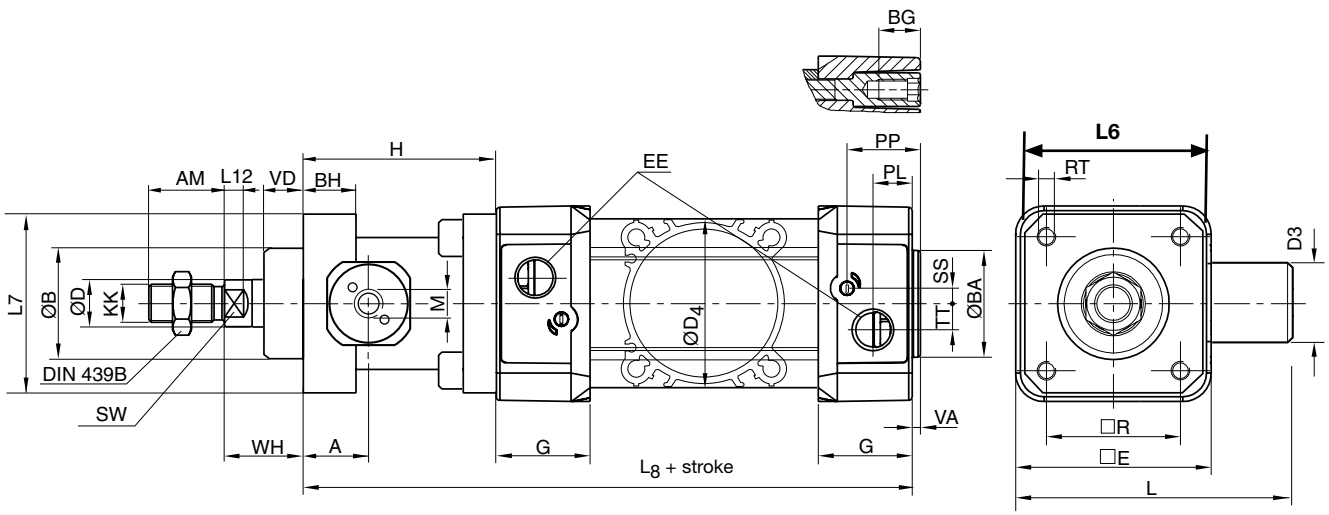

Dimensions (mm)

Cylinder bore mm	A mm	AM mm	B mm	BA mm	BG mm	BH mm	D mm	D3 mm	D4 mm	E mm	EE mm	G mm	H mm	KK
32	16.0	22	30	30	16	12	12	25	45.0	50.0	G1/8	28.5	48.0	M10x1.25
40	19.5	24	35	35	16	12	16	27.5	52.0	57.4	G1/4	33.0	55.0	M12x1.25
50	21.0	32	40	40	16	16	20	32.5	60.7	69.4	G1/4	33.5	70.0	M16x1.5
63	21.0	32	45	45	16	15	20	41.0	71.5	82.4	G3/8	39.5	70.0	M16x1.5
80	28.0	40	45	45	17	16	25	49.0	86.7	99.4	G3/8	39.5	90.0	M20x1.5
100	27.0	40	55	55	17	18	25	53.0	106.7	116.0	G1/2	44.5	92.0	M20x1.5
125	37.0	54	60	60	20	27	32	65.0	134.0	139.0	G1/2	51.0	122.0	M27x2

Cylinder bore mm	L mm	L6 mm	L7 mm	L8 mm	L12	M mm	PL mm	PP mm	R	RT mm	SS mm	SW mm	TT mm	VA mm	VD mm	WH
32	90.0	50	48	142	6.0	M5	13.0	21.8	32.5	M6	4.0	10	4.5	3.5	10	26
40	98.5	58	56	160	6.5	G1/8	14.0	21.9	38.0	M6	8.0	13	5.5	3.5	10	30
50	118.5	70	68	176	8.0	G1/8	14.0	23.0	46.5	M8	4.0	17	7.5	3.5	12	37
63	134.0	85	82	191	8.0	G1/8	16.4	27.4	56.5	M8	6.5	17	11.0	3.5	12	37
80	170.5	105	100	218	10.0	G1/8	16.0	30.5	72.0	M10	0	22	15.0	3.5	20	46
100	189.5	130	120	230	14.0	G1/8	18.0	35.8	89.0	M10	0	22	20.0	3.5	23	51
125	219.5	150	140	282	18.0	G1/8	28.0	40.5	110.0	M12	0	27	17.5	5.5	32	65

Tolerances (mm)

Cylinder bore mm	B	BA mm	L_8 mm	R mm	Stroke tolerance up to stroke 500 mm	Stroke tolerance for stroke over 500 mm
32	d11	d11	±0.4	±0.5	+0.3/+2.0	+0.3/+3.0
40	d11	d11	±0.7	±0.5	+0.3/+2.0	+0.3/+3.0
50	d11	d11	±0.7	±0.6	+0.3/+2.0	+0.3/+3.0
63	d11	d11	±0.8	±0.7	+0.3/+2.0	+0.3/+3.0
80	d11	d11	±0.8	±0.7	+0.3/+2.0	+0.3/+3.0
100	d11	d11	±1.0	±0.7	+0.3/+2.0	+0.3/+3.0
125	d11	d11	±1.0	±1.1	+0.3/+2.0	+0.3/+3.0

Fastening in position

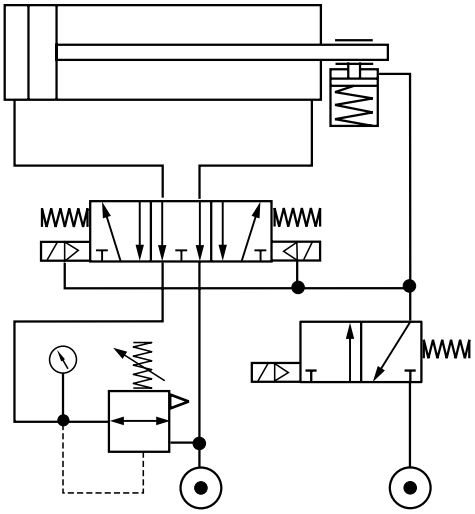

This is the optimum solution for straightforward fastening in any position, while preserving the maximum expected service life of the lock. The cylinder is supplied with compressed air via a 5/3 valve with vented centre. The valve is supplied with full pressure in port 3, port 2 is connected to the minus port on the cylinder, port 5 is supplied with a reduced pressure and port 4 is connected to the plus port on the cylinder. The reduced pressure to the cylinder plus port is to equalise the force, so that no forces can act on the lock when it in the locked position. The solenoid valves of the 5/3 valve are supplied with compressed air from a 3/2 valve, which also supplies compressed air to release the lock. To cause the cylinder to move in either direction, the 3/2 must be actuated in order to release the lock and supply the solenoid valves with signal air, after which they can be actuated. This means that as soon as the 3/2 valve is deactuated, the lock is applied and no signal air is supplied to the solenoid valves, causing the 5/3 valve to switch to the centre position. The cylinder is now supplied by the two different pressure sources, is fully vented and no force is applied to the lock.
This arrangement helps to secure the piston rod if there is a pressure loss due to hose rupture. The cylinder is supplied by a 5/2 valve and the cylinder speed is controlled using flow control valves with by-pass fitted near the cylinder. A TEE piece is fitted in the pipe between the working valve and the cylinder, going to a changeover valve with air passing to the lock. In the event of a pressure loss, the pressure to the 5/2 valve ceases, as does the pressure via the changeover valve to the lock. The lock is then applied.

Function on hose rupture

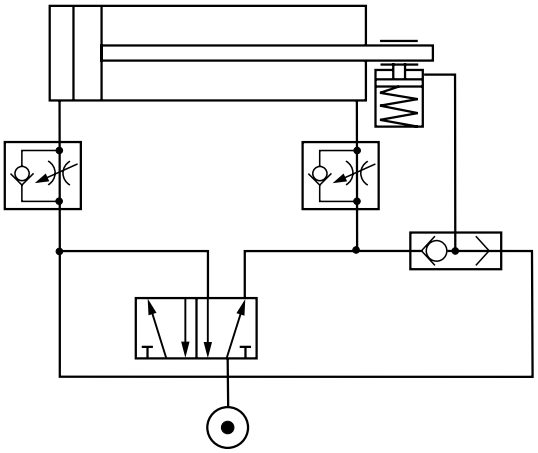

Function on pressure loss

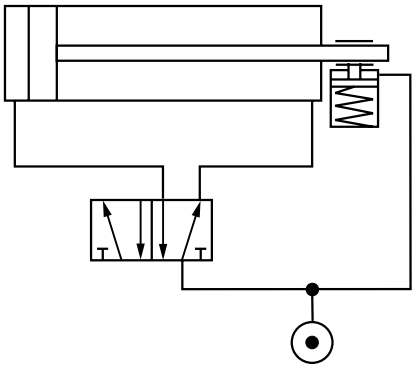

This solution is used to lock the cylinder in the event of a pressure loss in the system. A TEE piece is fitted in the pipe feeding the working valve for the cylinder. The lock on the cylinder is supplied from this TEE piece. In the event of a pressure loss, the lock is vented immediately and is applied.

The simple and complete order code key

The P1D order key is based on the same principles as its predecessors, the P1C and P1E. This makes it easy to identify and order all common cylinder versions. The change-over from our previous cylinder ranges to the equivalent P1D cylinders is logical and simple. As far as possible, the same symbols as for P1C and P1E have been retained for the same functions. Most of the common cylinder types in the P1D family have a 15-digit order number. Many of our complete working units (with factory-fitted cylinder mountings, sensors etc.) are defined by a 20-digit order number. There is only one single order key for P1D, which thus contains the 15-digit order numbers for the most common cylinder types and 20-digit order numbers for cylinders with more functions. Remember that there are always 15 or 20 positions in the order number – never any figure in between.

CE Ex II 2GD c T4 120 °C

1	2	3	4	5	6	7	8	9	10	11	12	13	14	15
P	1	D	-	S	0	3	2	M	S	-	0	1	0	0

Cylinder version

S	Standard
C	Pro Clean
V	Standard with valve built on (20 digits model code)
L	With dynamic rod lock unit
H	With static rod lock unit

Stroke (mm)
e.g. 0100 = 100 mm

Optional stroke lengths up to 2800 mm. Standard strokes see table.

Cylinder bore mm

032
040
050
063
080
100
125

End cover screws						Function
Standard			Stainless steel[22]			
Std scraper	HDPE scraper[23]	FPM scraper[24]	Std scraper	HDPE scraper[23]	FPM scraper[24]	
M	D	V	A	H	W	Double-acting
F	E	B	G	Y	Z	Double-acting through rod

Piston rod material			Seals
Stainless steel	Chromium-plated steel	Chrom.-pl. stainless steel	
S	C	R	Standard -20 °C to +80 °C.

22) If stainless steel end cover screws are selected, the piston rod nut is also supplied in stainless steel.
23) For dry rod operation.
24) FPM scraper should be chosen for higher chemical resistance on standard temperature versions only.

Examples Standard, double acting cylinder

Standard cylinder with standard scraper ring (PUR), standard piston rod material (stainless steel) and standard temperature range.

P1D-S032MS-0160
P1D-S100MS-0400

P1D cylinders with intermediate trunnion

There are three different types of intermediate trunnion in the P1D family. An intermediate trunnion for the P1D Standard placed in the centre or an optional location of the cylinder, or a flange mounted intermediate trunnion on the front or rear end cover that fits all P1D cylinders.

For the P1D, the intermediate trunnion is available among the cylinder mountings in position 17. If G or 7 appears in position 17, the position of the intermediate trunnion should be specified as a three-digit measurement in positions 18-20. 000 indicates a loose intermediate trunnion. If D or 6 appears in position 17, the intermediate trunnion is always centred on the cylinder (no measurement specified in positions 18-20).

For the version with optional location of the intermediate trunnion or loose intermediate trunnion, no choices can be made for positions 18-20 since they are used for the XV dimension.

1	2	3	4	5	6	7	8	9	10	11	12	13	14	15	16	17	18	19	20
P	1	D	-	S	0	4	0	M	S	-	0	3	2	0	N	D	N	N	N

Cylinder version	
S	Standard
L	With dynamic rod lock unit
H	With static rod lock unit

Cylinder mountings		
90°	0°	90° = shaft square to, 0° = shaft in line with ports[5]
G	7	Trunnion MT4, optional pos. (XV-meas. pos 18-20) [7]

For P1D-V please consult your local sales support

For XV position > 999mm consult your local sales support

5) Shaft or pivots square to or in line with the cylinder ports.
6) Mid position means NNN for digits in position 18-20.
7) For P1D-S XV-measure (from the piston rod thread according to ISO to the centre of the pivots) stated in mm in positions 18-20 (max 999, or 000 if loose trunnion specified.

Extended piston rod

All cylinders in the P1D family can be ordered with extended piston rod, for all piston rod materials. To make it possible to combine piston rod extension with all the functions and properties in the P1D system, the three positions which normally specify cylinder bore are used to specify both bore and extension. When ordering a P1D cylinder with extended piston rod, specify this as below.

1	2	3	4	5	6	7	8	9	10	11	12	13	14	15
P	1	D	-	S	K	R	5	M	S	-*	0	3	2	0

Cylinder version

S	Standard
C	Pro Clean
V	Standard with valve built on (20 digits model code)
L	With dynamic rod lock unit
H	Standard static lock unit

Cylinder bore mm

K	32
L	40
M	50
N	63
P	80
Q	100
R	125

Piston rod extension

E.g. KR5 = Cylinder bore 32 mm with piston rod extension = 255 mm

01-99	1-99	**N0-N9**	220-229
A0-A9	100-109	**P0-P9**	230-239
B0-B9	110-119	**Q0-Q9**	240-249
C0-C9	120-129	**R0-R9**	250-259
D0-D9	130-139	**S0-S9**	260-269
E0-E9	140-149	**T0-T9**	270-279
F0-F9	150-159	**U0-U9**	280-289
G0-G9	160-169	**V0-V9**	290-299
H0-H9	170-179	**W0-W9**	300-309
J0-J9	180-189	**X0-X9**	310-319
K0-K9	190-199	**Y0-Y9**	320-329
L0-L9	200-209	**Z0-Z9**	330-339
M0-M9	210-219	Longer on request	

The maximum extended piston rod length that can be specified by the order key is 339 mm. If a longer extended piston rod is needed please consult your local sales support.

By changing from 032 to KR5, the cylinder has been given a 255 mm extended piston rod. At the same time, the cylinder can be specified with all functions and properties in the other digits.

*** -, T, Y, W, V or valve options (model code with 20 digits)**

Example of an extended piston rod

P1D-SK45MS-0200 P1D Standard cylinder, bore 32 mm, with a 45 mm extended piston rod.

Piston rod in alternative materials

P1D has a polished stainless steel piston rod as standard. If you want a different material and/or surface treatment, please order this in combination with seal material in position 10.

Piston rod nuts are supplied in zinc plated steel as standard, but stainless steel piston rod nuts are always supplied for P1D Pro Clean. If an alternative material is used, the piston rod nut is always supplied in the same material.

1	2	3	4	5	6	7	8	9	10	11	12	13	14	15
P	1	D	-	S	0	3	2	M	S	-*	0	1	0	0

Cylinder version

S	Standard
C	Pro Clean
V	Standard with valve built on (20 digits model code)
L	With dynamic rod lock unit
H	Standard static lock unit

Piston rod material			Seals
Stainless steel	Chromium-plated steel	Chrom.-pl. stainless steel	
S	**C**	**R**	Standard -20 °C to +80 °C.

S not in combination with rod lock device

*** -, T, Y, W, V or valve options (model code with 20 digits)**

Example of piston rod material

P1D-S032MS-0100 P1D Standard cylinder, bore 32 mm, with stainless steel piston rod (standard)

Through piston rod

All P1D cylinders can be ordered with a through piston rod. Order this design in position 9 in combination with the scraper ring system as below.

1	2	3	4	5	6	7	8	9	10	11	12	13	14	15
P	1	D	-	S	0	3	2	F	S	-*	0	1	0	0

Cylinder version	
S	Standard
C	Pro Clean
V	Standard with valve built on (20 digits model code)
L	With dynamic rod lock unit
H	Standard static lock unit

End cover screws						Function
Standard			Stainless steel[22)]			
Std scraper	HDPE scraper[23)]	FPM scraper[26)]	Std scraper	HDPE scraper[23)]	FPM scraper[26)]	
M	D	V	A	H	W	Double-acting
F	E	B	G	Y	Z	Double-acting through rod

22) If stainless steel end cover screws are selected, the piston rod nuts are also supplied in stainless steel.

23) For dry rod operation. Not for P1D-L and H versions.

26) FPM scraper should be chosen for higher chemical resistance on standard temperature versions only.

* -, T, Y, W, V or valve options (model code with 20 digits)

Example of through piston rod

P1D-S032FS-0100 P1D Standard cylinder, bore 32 mm, with through piston rod.

Operation with a dry piston rod

The seal system for operation with a dry piston rod (HDPE scraper) is available as an option for all P1D cylinders except high and low temperature version and the hydraulic model.

Order this function by specifying letter D in position 9 (double acting cylinder) or E (double acting cylinder with through piston rod). Specify the code for the seal system in either the 15 or 20 digit part number.

1	2	3	4	5	6	7	8	9	10	11	12	13	14	15
P	1	D	-	S	0	8	0	D	S	-*	0	2	0	0

Cylinder version	
S	Standard
C	Pro Clean
V	Standard with valve built on (20 digits model code)

End cover screws						Function[34)]
Standard			Stainless steel[22)]			
Std scraper	HDPE scraper[23)]	FPM scraper[26)]	Std scraper	HDPE scraper[23)]	FPM scraper[26)]	
M	D	V	A	H	W	Double-acting
F	E	B	G	Y	Z	Double-acting through rod

22) If stainless steel end cover screws are selected, the piston rod nut(s) are also supplied in stainless steel.

23) For dry rod operation.

26) FPM scraper should be chosen for higher chemical resistance on standard temperature versions only.

* -, T, Y, W, V or valve options (model code with 20 digits)

Example of seal system for dry rod

P1D-S040DS-0200 P1D Standard cylinder with seal system for dry operation.

Order Key Code (* 20 digits only for options)

15 digit order code

1	2	3	4	5	6	7	8	9	10	11	12	13	14	15
P	1	D	-	S	0	3	2	M	S	-	0	1	0	0

20 digit order code *

16	17	18	19	20
N	G	1	2	3

5 Valid only for P1D-S***MS-****, see ATEX information

Cylinder version	
S	Standard
C	Pro Clean [1]
V	Standard with built on valve
L	With rod dynamic lock unit [2]
H	With rod static lock unit [2]

6-7-8

Cylinder bore mm
032
040
050
063
080
100
125

6 For rod extension only

Cylinder bore mm	
K	32
L	40
M	50
N	63
P	80
Q	100
R	125

7-8

Piston rod extension			
E. g. KR5 = Cylinder bore 32 mm with piston rod extension = 255 mm			
01-99	1-99	N0-N9	220-229
A0-A9	100-109	P0-P9	230-239
B0-B9	110-119	Q0-Q9	240-249
C0-C9	120-129	R0-R9	250-259
D0-D9	130-139	S0-S9	260-269
E0-E9	140-149	T0-T9	270-279
F0-F9	150-159	U0-U9	280-289
G0-G9	160-169	V0-V9	290-299
H0-H9	170-179	W0-W9	300-309
J0-J9	180-189	X0-X9	310-319
K0-K9	190-199	Y0-Y9	320-329
L0-L9	200-209	Z0-Z9	330-339
M0-M9	210-219	Longer on request	

9

End cover screws						Function
Standard			Stainless steel[3]			
Std scraper	HDPE scraper[4]	FPM scraper	Std scraper	HDPE scraper[4]	FPM scraper	
M	D	V	A	H	W	Double-acting
F	E	B	G	Y	Z	Double-acting through rod

10

Piston rod material			Seals
Stainless steel	Chromium-plated steel	Chromium plated stainless steel	
S	C	R	Standard temperature -20°C to +80°C

S not in combination with rod lock device

17-18-19-20

Intermediate trunnion [5]		
90°	0°	See page 45 for more details
G	7	Trunnion MT4, following XV measure digits 18-19-20 Free trunnion 000 digits 18-19-20

11

Options	
—	G threads
0	Air actuated
1	Electrically actuated 24 V UC, LED+VDR (AC/DC Universal Current) Complete with rectifier
2	Electrically actuated 115 V/50 Hz, 120 V/60 Hz, LED+VDR
3	Electrically actuated 230 V/50 Hz, 240 V/60 Hz, LED+VDR
4	Electrically actuated 24 V UC, LED+VDR with 5 m integral cable (AC/DC Universal Current) Complete with rectifier
7	Electrically actuated 24 V UC, LED+VDR with 10 m integral cable (AC/DC Universal Current) Complete with rectifier
T	2 T slots on top Pro Clean design only
Y	2 T slots on right Pro Clean design only
W	2 T slots on bottom Pro Clean design only
V	2 T slots on left Pro Clean design only

For P1D-C Pro Cean version, cylinder is showed piston rod in the front and air ports on the top for choosing the right face for the position of the 2 T slots

12-13-14-15

Stroke (mm) e.g. 0100 = 100 mm
Optional stroke lengths up to 2800 mm

19

Piston rod thread [6]	
6	Internal piston rod thread

16

Option	
N	No mounting

20

Valve function	
Air actuated (digit 11: 0)	
A	Air-Air, 5/2
B	Air-Spring, 5/2
C	Air-Air, 5/3, closed centre position
D	Air-Air, 5/3, vented centre
E	Air-Air, 5/3, pressurised centre
Electrically actuated internal supply	
F	Elec-Elec, 5/2
H	Elec-Spring, 5/2
K	Spring-Elec(8), 5/2
M	Elec-Elec, 5/3, closed centre position
Q	Elec-Elec, 5/3, vented centre
S	Elec-Elec, 5/3, pressurised centre

Information notes

1) P1D-C Pro Clean with sensor function (2 T slots on one face)
2) Only for piston rod material type C and R.
3) If stainless steel end cover screws are selected, the piston rod nut is also supplied in stainless steel.
4) For operation with dry piston rod. Intended for variants P1D-S, P1D-C and P1D-V.
5) Shaft or pivots square to or in line with the air ports.
6) Other threads on request.
7) Piston in extended position with unactuated valve.

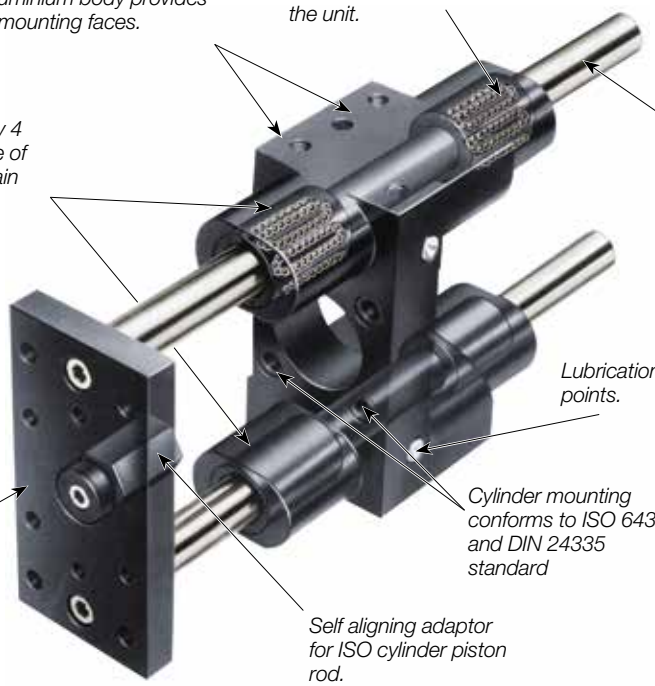

Installation on P1D cylinders should have a pisron rod WH dimensions as shown in the chart below

Cyl. dim mm	Piston rod extension WH mm
32	26
40	30
50	37
63	37
80	46
100	51

P1D with rod guidance modules

The P1D series cylinders can be equipped with an external guiding device to prevent the piston rod from turning. The factory fitted guide gives a guided piston movement and enables the cylinder to take up turning moments on the piston rod, as well as greater transverse forces. The rod guidance is available with plain bearings or linear ball bearings and with H or U style. The bracket, which has pre-drilled mounting holes, is connected to the piston rod by means of a flexo coupling, which prevents the build-up of stresses in the cylinder. Guidance modules are available for bores from 32 to 100 mm, and standard stroke lengths from 25 to 250 mm. Special stroke lengths up to 500 mm can also be obtained.

Technical data

Load	See diagram on next page
Working temperature	–20 °C to +80 °C

Material specifications

Body	Anodised aluminium
Guide bars, H style	Stainless steel for ball bearing chrome plated for plain bearing
Front plate	Anodised aluminium
Guide bars, U style	Stainless steel
Front plate	Zinc-plated steel
Bearings	Plain bearings Linear ball bearings

Order code key for rod guidance modules

P 1 E - 4 K R H - 0 1 0 0

	Cylinder version
E	ISO cylinders

	Bore size mm
K	32
L	40
M	50
N	63
P	80
Q	100

	Guide module type
H	H style, ball bearings
J	H style, plain bearings
K	U style, plain bearings

Stroke length (mm)
Same as for the cylinder e.g. **0100** = 100 mm.

Technical information 'H style'

Rod guide with ball bearings

Maximum load carried

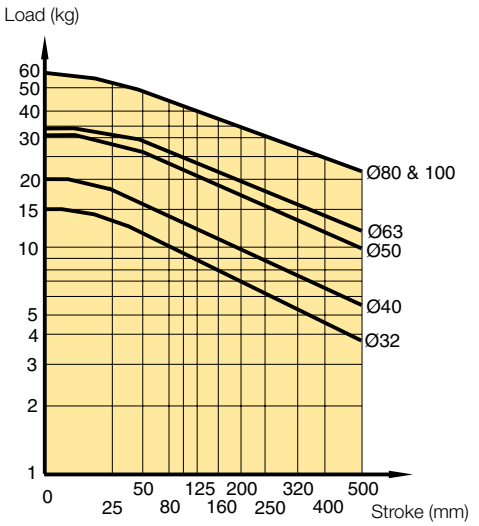

Graphs established at mid point of stroke

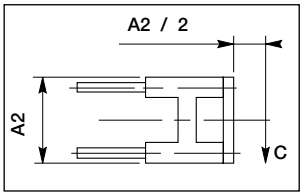

Maximum deflection/max load

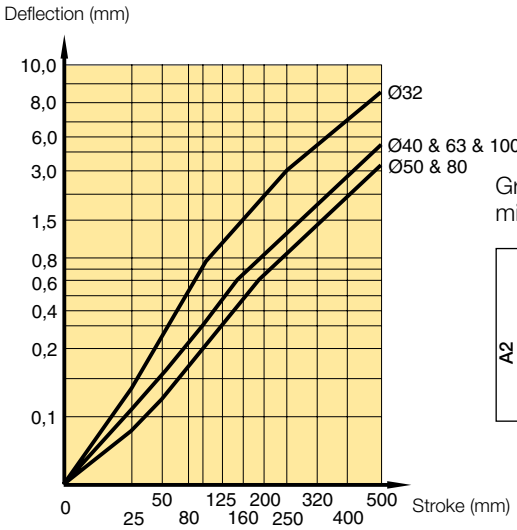

Graphs established at mid point of stroke

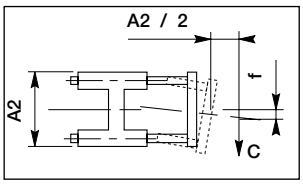

Maximum permissible torque (Nm)

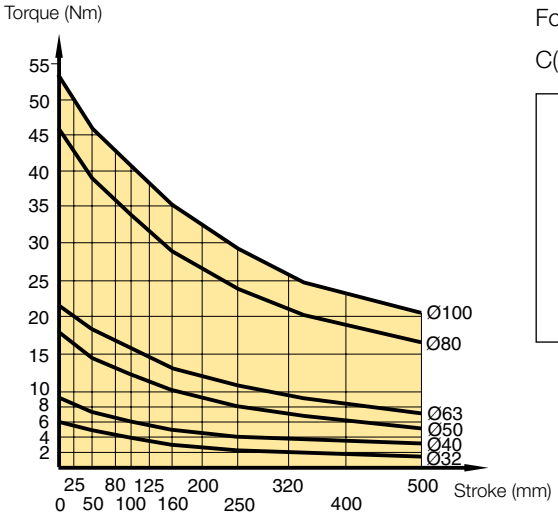

Formula:

C(Nm) = F(N) x L(m)

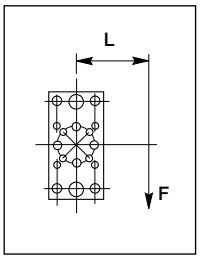

Rod guide with plain bearings

Maximum load carried

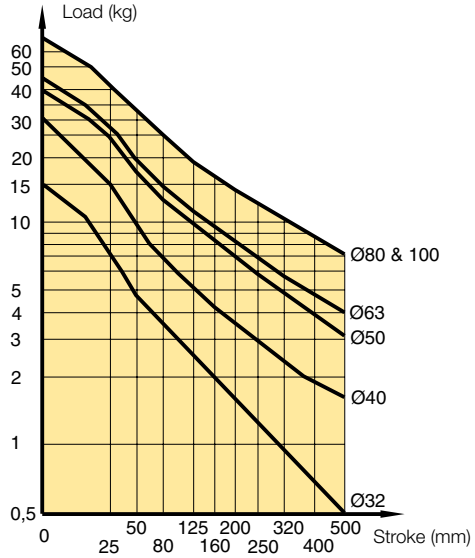

Maximum deflection/max load

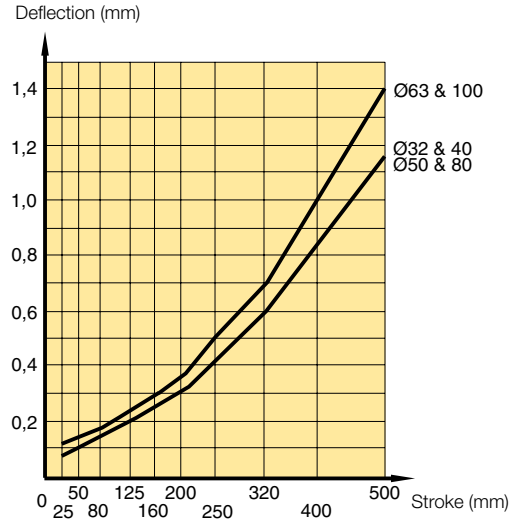

Maximum permissible torque (Nm)

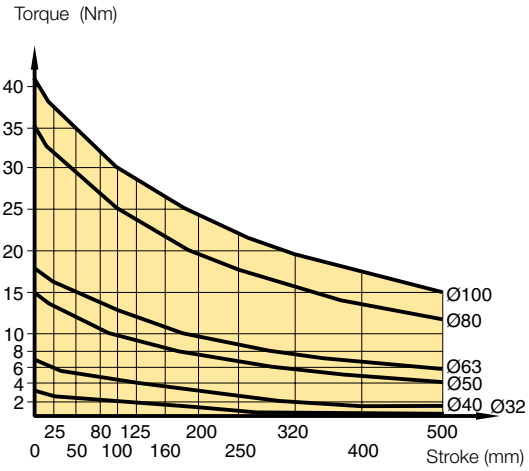

H style guidance modules

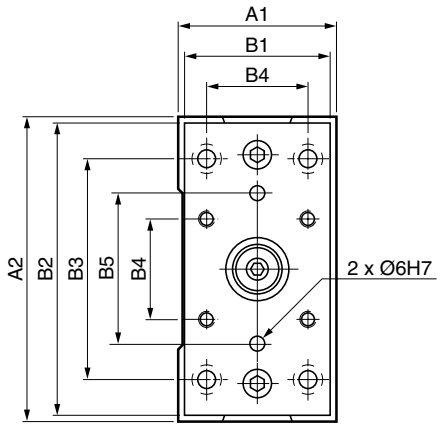

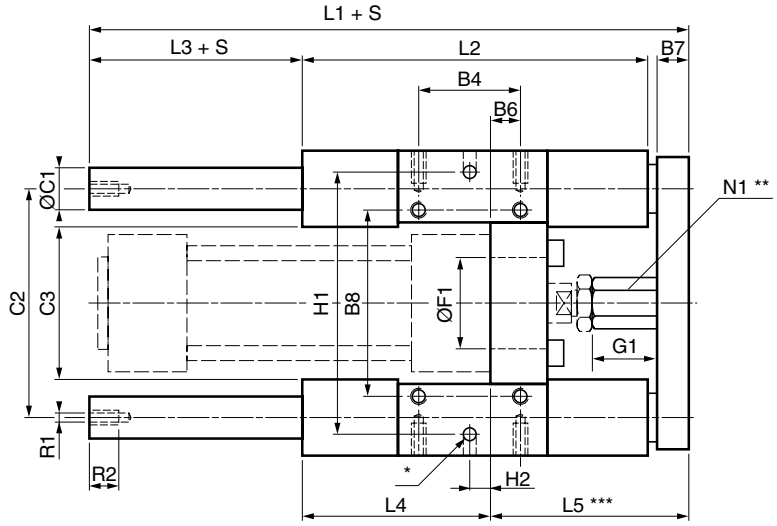

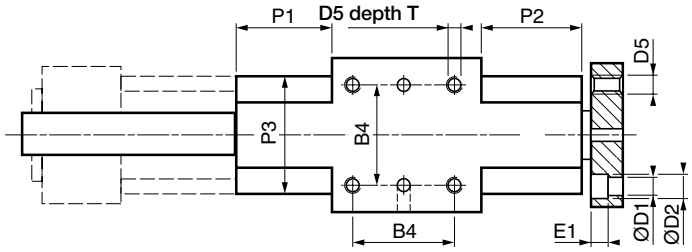

Dimensions (mm)

Cyl. bore mm	A_1 mm	A_2 mm	B_1 mm	B_2 mm	B_3 mm	B_4 mm	B_5 mm	B_6 mm	B_7 mm	B_8 mm	$ØC_1$ mm	C_2 mm	C_3 mm	$ØD_1$ mm	$ØD_2$ mm	D_5
32	50	97	45	90	78	32,5	50	4,2	12	61	12	73,5	50	6,6	11	M6
40	58	115	54	110	84	38,0	54	11,0	12	69	16	86,5	58	6,6	11	M6
50	70	137	63	130	100	46,5	72	18,8	15	85	20	103,5	70	8,4	15	M8
63	85	152	80	145	105	56,5	82	15,0	15	100	20	118,5	83	8,4	15	M8
80	105	189	100	180	130	72,0	106	21,0	20	130	25	147,0	102	10,5	18	M10
100	130	213	120	200	150	89,0	131	24,5	20	150	25	171,5	125	10,5	18	M10

Cyl. bore mm	E_1 mm	$Ø F_1{}^{+0,1/0}G_1$ mm	L_1 mm	L_2 mm	L_3 mm	L_4 mm	L_5 mm	N_1 mm	$P_1{}^{\pm1}$ mm	$P_2{}^{\pm1}$ mm	P_3 mm	R_1 mm	R_2 mm	W mm	mm
32	7	30	17	150	120	15	71	64	17	36	31	40	M6	11	5
40	7	35	24	170	130	25	71	74	17	36	36	44	M6	11	6
50	9	40	27	197	150	24	79	89	24	42	44	50	M8	16	8
63	9	45	27	222	180	24	109	89	24	58	44	60	M8	16	8
80	11	45	32	247	200	24	113	110	30	50	52	70	M10	16	10
100	11	55	32	267	220	24	128	115	30	49	51	70	M10	16	10

Cyl. bore mm	$H_1{}^{\pm0,05}$ mm	H_2 mm	T mm	Weight at 0 mm stroke kg	Supplement weight per 10 mm stroke kg
32	81	11,7	12	0,970	0,018
40	99	8,0	12	1,550	0,032
50	119	4,2	16	2,560	0,050
63	132	13,0	16	3,570	0,050
80	166	15,0	20	6,530	0,078
100	190	20,5	20	8,760	0,078

S = Stroke length

* 6 hole Ø6 ^{H7}, depth $10^{+1/0}$

** Hexagon profile

*** Min adjustment=0, max.=W

U style guidance modules

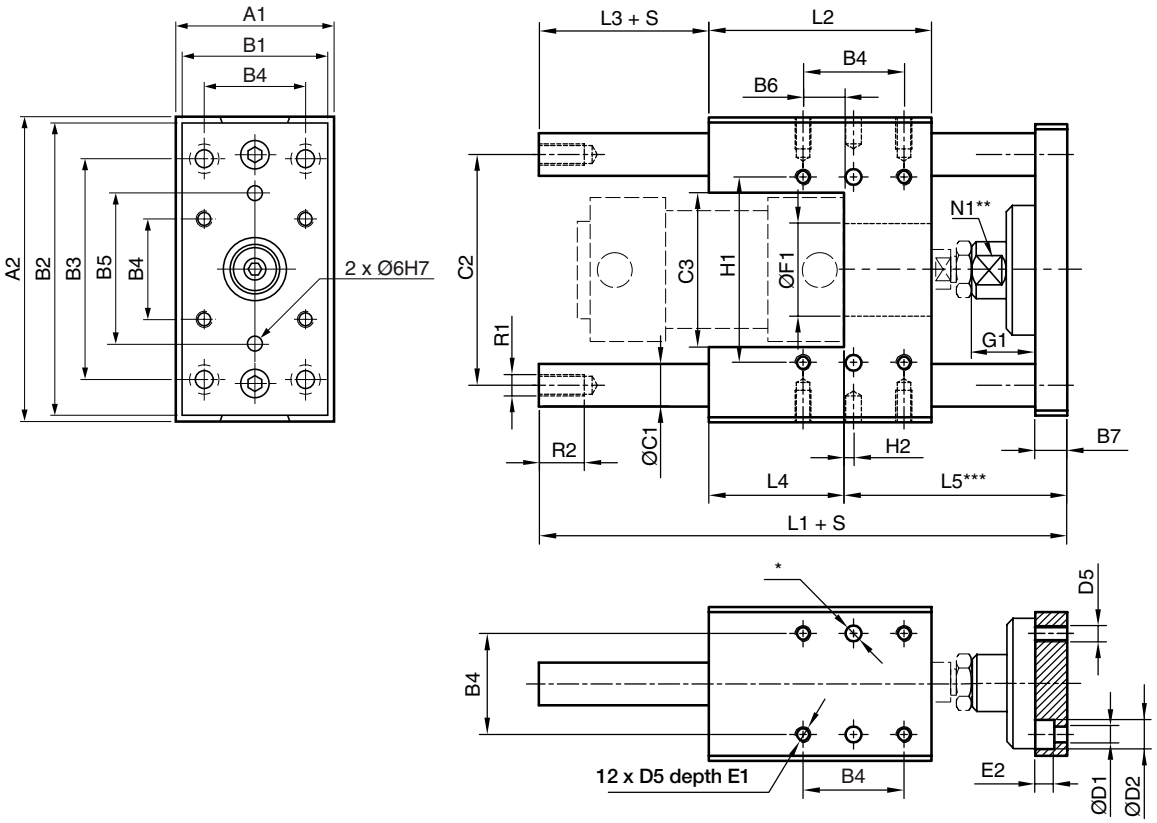

Dimensions (mm)

Cyl. bore. mm	A_1 mm	A_2 mm	B_1 mm	B_2 mm	B_3 mm	B_4 mm	B_5 mm	B_6 mm	B_7 mm	C_1 mm	C_2 mm	C_3 mm	D_1 mm	D_2 mm	D_5
32	50	97	45	90	78	32,5	50	18,0	12	12	74	50	6,6	11	M6
40	58	115	54	110	84	38,0	54	15,5	12	16	87	58	6,6	11	M6
50	70	137	63	130	100	46,5	72	19,5	15	20	104	70	9,0	15	M8
63	85	152	80	145	105	56,5	82	29,5	15	20	119	85	9,0	15	M8
80	105	189	100	180	130	72,0	106	39,0	20	25	148	105	11,0	18	M10
100	130	213	120	200	150	89,0	131	53,5	20	25	172	130	11,0	18	M10

Cyl. bore. mm	E_1 mm	E_2 mm	Ø $F_1^{+0,1/0}$ mm	G_1	L_1 mm	L_2 mm	L_3 mm	L_4 mm	L_5 mm	N_1 mm	R_1 mm	R_2	$H_1^{\pm 0,05}$ mm	H_2 mm	W*** mm
32	10	6,5	30	30	133	72	14	44	75	13	M6	11	61	1,75	5
40	10	6,5	35	36	149	84	12	51	86	15	M8	12	69	3,50	5
50	13	9,0	40	42	175	100	12	60	103	22	M8	12	85	3,75	5
63	13	9,0	45	42	190	115	12	75	103	22	M8	12	100	1,25	5
80	16	11,0	45	49	238	162	0	112	126	27	M10	16	130	3,00	6
100	16	11,0	55	49	249	167	6	112	131	27	M10	16	150	8,50	6

Cyl. bore mm	Weight at 0 mm stroke kg	Supplement weight per 10 mm stroke kg
32	0,970	0,018
40	1,550	0,315
50	2,560	0,493
63	3,570	0,493
80	6,530	0,770
100	8,760	0,770

S = Stroke length

* 6 hole Ø6 ^{H7}, depth $10^{+1/0}$

** Width of jaw

*** Min adjustment=0, max.=W

	Flange MF1/MF2 [1]	Foot brackets MS1 [2]	Pivot bracket with rigid bearing AB7 [3]	Swivel eye bracket MP6 [4]	Clevis bracket MP2 [5]
Ø 32	P1C-4KMB	P1C-4KMF	P1C-4KMD	P1C-4KMSA	P1C-4KMT
Ø 40	P1C-4LMB	P1C-4LMF	P1C-4LMD	P1C-4LMSA	P1C-4LMT
Ø 50	P1C-4MMB	P1C-4MMF	P1C-4MMD	P1C-4MMSA	P1C-4MMT
Ø 63	P1C-4NMB	P1C-4NMF	P1C-4NMD	P1C-4NMSA	P1C-4NMT
Ø 80	P1C-4PMB	P1C-4PMF	P1C-4PMD	P1C-4PMSA	P1C-4PMT
Ø 100	P1C-4QMB	P1C-4QMF	P1C-4QMD	P1C-4QMSA	P1C-4QMT
Ø 125	P1C-4RMB	P1C-4RMF	P1C-4RMD	P1C-4RMSA	P1C-4RMT

	Clevis bracket MP4 [6]	Clevis bracket AB6 [7]	Pivot bracket with swivel bearing CS7 [8]	3 and 4 positions flange JP1 [9]	Pivot brackets AT4 for MT* trunnion [10]
Ø 32	P1C-4KME	P1C-4KMCA	P1C-4KMA	P1E-6KB0	9301054261
Ø 40	P1C-4LME	P1C-4LMCA	P1C-4LMA	P1E-6LB0	9301054262
Ø 50	P1C-4MME	P1C-4MMCA	P1C-4MMA	P1E-6MB0	9301054262
Ø 63	P1C-4NME	P1C-4NMCA	P1C-4NMA	P1E-6NB0	9301054264
Ø 80	P1C-4PME	P1C-4PMCA	P1C-4PMA	P1E-6PB0	9301054264
Ø 100	P1C-4QME	P1C-4QMCA	P1C-4QMA	P1E-6QB0	9301054266
Ø 125	P1C-4RME	P1C-4RMCA	P1C-4RMA		9301054266

	Flange trunnion MT5/MT6 [11]	Intermediate trunnion MT4 [12]	Swivel rod eye AP6 [13]	Clevis AP2 [14]	Flexo coupling PM5 [15]
Ø 32	P1D-4KMYF	Factory fitted	P1C-4KRS	P1C-4KRC	P1C-4KRF
Ø 40	P1D-4LMYF	Factory fitted	P1C-4LRS	P1C-4LRC	P1C-4LRF
Ø 50	P1D-4MMYF	Factory fitted	P1C-4MRS	P1C-4MRC	P1C-4MRF
Ø 63	P1D-4NMYF	Factory fitted	P1C-4MRS	P1C-4MRC	P1C-4MRF
Ø 80	P1D-4PMYF	Factory fitted	P1C-4PRS	P1C-4PRC	P1C-4PRF
Ø 100	P1D-4QMYF	Factory fitted	P1C-4PRS	P1C-4PRC	P1C-4PRF
Ø 125		Factory fitted	P1C-4RRS	P1C-4RRC	P1C-4RRF

	Zinc-plated steel nut MR9 (pack of 10) [16]
Ø 32	P14-4KRPZ
Ø 40	P14-4LRPZ
Ø 50	P14-4MRPZ
Ø 63	P14-4MRPZ
Ø 80	P14-4PRPZ
Ø 100	P14-4PRPZ
Ø 125	P14-4RRPZ

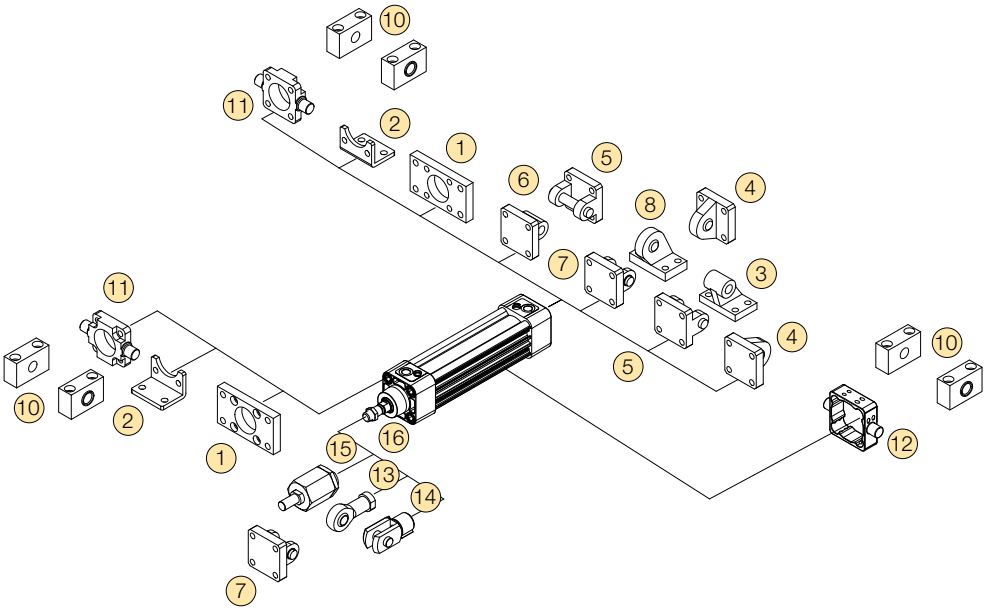

Type | Description | For mounting screws in stainless steel see page 46

Flange MF1/MF2 ①

Intended for fixed mounting of cylinder. Flange can be fitted to front or rear end cover of cylinder.

Materials
Flange: Surface-treated steel
Mounting screws acc. to DIN 6912: Zinc-plated steel 8.8

Supplied complete with mounting screws for attachment to cylinder.

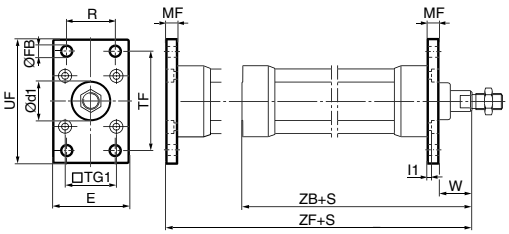

Cyl. bore mm	d1 H11 mm	FB H13 mm	TG1 mm	E mm	R JS14 mm	MF JS14 mm	TF JS14 mm	UF mm	l1 -0,5 mm	W* mm	ZF* mm	ZB* mm	Weight Kg	**Order code**
32	30	7	32,5	45	32	10	64	80	5,0	16	130	123,5	0,23	**P1C-4KMB**
40	35	9	38,0	52	36	10	72	90	5,0	20	145	138,5	0,28	**P1C-4LMB**
50	40	9	46,5	65	45	12	90	110	6,5	25	155	146,5	0,53	**P1C-4MMB**
63	45	9	56,5	75	50	12	100	120	6,5	25	170	161,5	0,71	**P1C-4NMB**
80	45	12	72,0	95	63	16	126	150	8,0	30	190	177,5	1,59	**P1C-4PMB**
100	55	14	89,0	115	75	16	150	170	8,0	35	205	192,5	2,19	**P1C-4QMB**
125	60	16	110,0	140	90	20	180	205	10,5	45	245	230,5	3,78	**P1C-4RMB**

S = Stroke length * Does not apply to cylinders with lock unit or with protusion of the piston rod

Foot brackets MS1 ②

Intended for fixed mounting of cylinder. Foot bracket can be fitted to front and rear end covers of cylinder.

Materials
Foot bracket: Surface-treated steel
Mounting screws acc. to DIN 912: Zinc-plated steel 8.8

Supplied in pairs with mounting screws for attachment to cylinder.

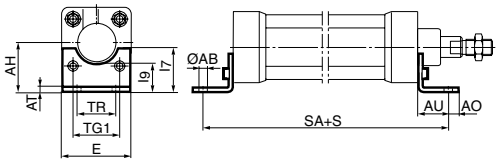

Cyl. bore mm	AB H14 mm	TG1 mm	E mm	TR JS14 mm	AO mm	AU mm	AH JS15 mm	l7 mm	AT mm	l9 JS14 mm	SA* mm	Weight Kg	**Order code**
32	7	32,5	45	32	10	24	32	30	4,5	17,0	142	0,06**	**P1C-4KMF**
40	9	38,0	52	36	8	28	36	30	4,5	18,5	161	0,08**	**P1C-4LMF**
50	9	46,5	65	45	13	32	45	36	5,5	25,0	170	0,16**	**P1C-4MMF**
63	9	56,5	75	50	13	32	50	35	5,5	27,5	185	0,25**	**P1C-4NMF**
80	12	72,0	95	63	14	41	63	49	6,5	40,5	210	0,50**	**P1C-4PMF**
100	14	89,0	115	75	15	41	71	54	6,5	43,5	220	0,85**	**P1C-4QMF**
125	16	110,0	140	90	22	45	90	71	8,0	60,0	250	1,48**	**P1C-4RMF**

S = Stroke length
** Weight per item

Pivot bracket with rigid bearing AB7 ③

Intended for flexible mounting of cylinder. The pivot bracket can be combined with clevis bracket MP2.

Materials
Pivot bracket: Surface-treated aluminium, black
Bearing: Sintered oil-bronze bushing

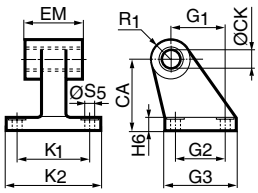

Cyl. bore mm	CK H9 mm	S5 H13 mm	K1 JS14 mm	K2 mm	G1 JS14 mm	G2 JS14 mm	EM mm	G3 mm	CA JS15 mm	H6 mm	R1 mm	Weight Kg	**Order code**
32	10	6,6	38	51	21	18	25,5	31	32	8	10,0	0,06	**P1C-4KMD**
40	12	6,6	41	54	24	22	27,0	35	36	10	11,0	0,08	**P1C-4LMD**
50	12	9,0	50	65	33	30	31,0	45	45	12	13,0	0,15	**P1C-4MMD**
63	16	9,0	52	67	37	35	39,0	50	50	12	15,0	0,20	**P1C-4NMD**
80	16	11,0	66	86	47	40	49,0	60	63	14	15,0	0,33	**P1C-4PMD**
100	20	11,0	76	96	55	50	59,0	70	71	15	19,0	0,49	**P1C-4QMD**
125	25	14,0	94	124	70	60	69,0	90	90	20	22,5	1,02	**P1C-4RMD**

Type | Description | For mounting screws in stainless steel see page 46

Swivel eye bracket MP6 ④

Intended for use together with clevis bracket AB6

Material
Bracket: Surface-treated aluminium, black
Swivel bearing acc. to DIN 648K: Hardened steel

Supplied complete with mounting screws for attachment to cylinder.

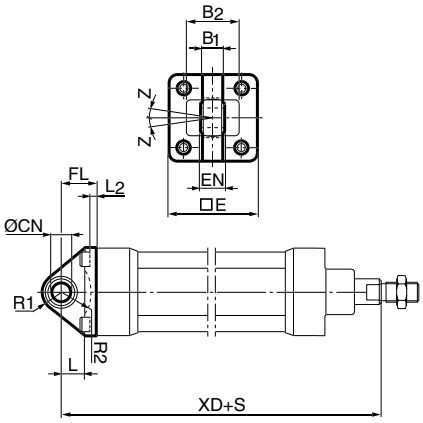

Cyl. bore mm	E mm	B1 mm	B2 mm	EN mm	R1 mm	R2 mm	FL mm	l2 mm	L mm	CN H7 mm	XD* mm	Z	Weight Kg	**Order code**
32	45	10,5	-	14	16	-	22	5,5	12	10	142	4°	0,08	**P1C-4KMSA**
40	52	12,0	-	16	18	-	25	5,5	15	12	160	4°	0,11	**P1C-4LMSA**
50	65	15,0	51	21	21	19	27	6,5	15	16	170	4°	0,20	**P1C-4MMSA**
63	75	15,0	-	21	23	-	32	6,5	20	16	190	4°	0,27	**P1C-4NMSA**
80	95	18,0	-	25	29	-	36	10,0	20	20	210	4°	0,52	**P1C-4PMSA**
100	115	18,0	-	25	31	-	41	10,0	25	20	230	4°	0,72	**P1C-4QMSA**
125	140	25,0	-	37	40	-	50	10,0	30	30	275	4°	1,53	**P1C-4RMSA**

S = Stroke length * Does not apply to cylinders with lock unit or with protusion of the piston rod

Clevis bracket MP2 ⑤

Intended for flexible mounting of cylinder. Clevis bracket MP2 can be combined with clevis bracket MP4.

Materials
Clevis bracket: Surface-treated aluminium, black
Pin: Surface hardened steel
Circlips according to DIN 471: Spring steel
Mounting screws acc. to DIN 912: Zinc-plated steel 8.8

Supplied complete with mounting screws for attachment to cylinder.

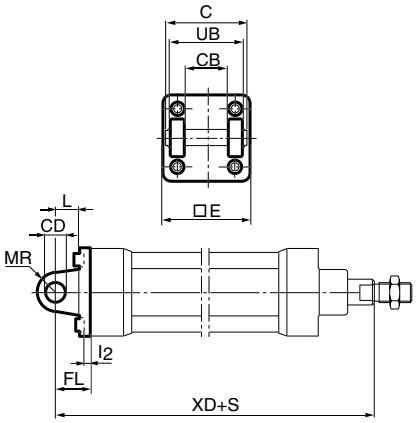

Cyl. bore mm	C mm	E mm	UB h14 mm	CB H14 mm	FL ±0,2 mm	L mm	l2 mm	CD H9 mm	MR mm	XD* mm	Weight Kg	**Order code**
32	53	45	45	26	22	13	5,5	10	10	142	0,08	**P1C-4KMT**
40	60	52	52	28	25	16	5,5	12	12	160	0,11	**P1C-4LMT**
50	68	65	60	32	27	16	6,5	12	12	170	0,14	**P1C-4MMT**
63	78	75	70	40	32	21	6,5	16	16	190	0,29	**P1C-4NMT**
80	98	95	90	50	36	22	10,0	16	16	210	0,36	**P1C-4PMT**
100	118	115	110	60	41	27	10,0	20	20	230	0,64	**P1C-4QMT**
125	139	140	130	70	50	30	10,0	25	25	275	1,17	**P1C-4RMT**

S = Stroke length * Does not apply to cylinders with lock unit or with protusion of the piston rod

Type | Description | For mounting screws in stainless steel see page 46

Clevis bracket MP4 ⑥

Intended for flexible mounting of cylinder. Clevis bracket MP4 can be combined with clevis bracket MP2.

Materials
Clevis bracket: Surface-treated aluminium, black
Mounting screws acc. to DIN 912: Zinc-plated steel 8.8

Supplied complete with mounting screws for attachment to cylinder.

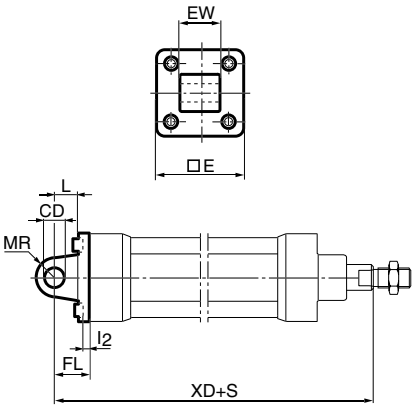

Cyl. bore mm	E mm	EW mm	FL mm	L ±0,2 mm	l2 mm	CD mm	MR H9 mm	XD* mm	Weight Kg	**Order code**
32	45	26	22	13	5,5	10	10	142	0,09	**P1C-4KME**
40	52	28	25	16	5,5	12	12	160	0,13	**P1C-4LME**
50	65	32	27	16	6,5	12	12	170	0,17	**P1C-4MME**
63	75	40	32	21	6,5	16	16	190	0,36	**P1C-4NME**
80	95	50	36	22	10,0	16	16	210	0,46	**P1C-4PME**
100	115	60	41	27	10,0	20	20	230	0,83	**P1C-4QME**
125	140	70	50	30	10,0	25	25	275	1,53	**P1C-4RME**

S = Stroke length * Does not apply to cylinders with lock unit or with protusion of the piston rod

Clevis bracket AB6 ⑦

Intended for flexible mounting of cylinder. Clevis bracket AB6 can be combined with pivot bracket with swivel bearing, swivel eye bracket and swivel rod eye.

Materials
Clevis bracket: Surface-treated aluminium
Pin: Surface hardened steel
Locking pin: Spring steel
Circlips according to DIN 471: Spring steel
Mounting screws acc. to DIN 912: Zinc-plated steel 8.8

Supplied complete with mounting screws for attachment to cylinder.

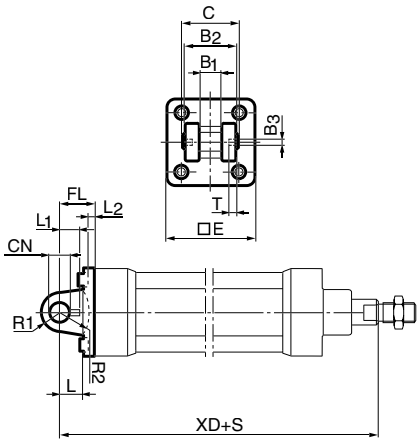

Cyl. bore mm	C mm	E mm	B2 d12 mm	B1 H14 mm	T mm	B3 mm	R2 mm	L1 mm	FL ±0,2 mm	l2 mm	L mm	CN F7 mm	R1 mm	XD* mm	Weight Kg	**Order code**
32	41	45	34	14	3	3,3	17	11,5	22	5,5	12	10	11	142	0,09	**P1C-4KMCA**
40	48	52	40	16	4	4,3	20	12,0	25	5,5	15	12	13	160	0,13	**P1C-4LMCA**
50	54	65	45	21	4	4,3	22	14,0	27	6,5	17	16	18	170	0,17	**P1C-4MMCA**
63	60	75	51	21	4	4,3	25	14,0	32	6,5	20	16	18	190	0,36	**P1C-4NMCA**
80	75	95	65	25	4	4,3	30	16,0	36	10,0	20	20	22	210	0,58	**P1C-4PMCA**
100	85	115	75	25	4	4,3	32	16,0	41	10,0	25	20	22	230	0,89	**P1C-4QMCA**
125	110	140	97	37	6	6,3	42	24,0	50	10,0	30	30	30	275	1,75	**P1C-4RMCA**

S = Stroke length * Does not apply to cylinders with lock unit or with protusion of the piston rod

Type | Description | For mounting screws in stainless steel see page 46

Pivot bracket with swivel bearing CS7 (8)

Intended for use together with clevis bracket AB6.

Material
Pivot bracket: Surface-treated steel, black
Swivel bearing acc. to DIN 648K: Hardened steel

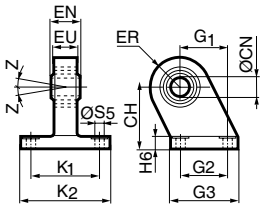

Cyl. bore mm	CN H7 mm	S5 H13 mm	K1 JS14 mm	K2 mm	EU mm	G1 JS14 mm	G2 JS14 mm	EN mm	G3 mm	CH JS15 mm	H6 mm	ER mm	Z	Weight Kg	**Order code**
32	10	6,6	38	51	10,5	21	18	14	31	32	10	16	4°	0,18	**P1C-4KMA**
40	12	6,6	41	54	12,0	24	22	16	35	36	10	18	4°	0,25	**P1C-4LMA**
50	16	9,0	50	65	15,0	33	30	21	45	45	12	21	4°	0,47	**P1C-4MMA**
63	16	9,0	52	67	15,0	37	35	21	50	50	12	23	4°	0,57	**P1C-4NMA**
80	20	11,0	66	86	18,0	47	40	25	60	63	14	28	4°	1,05	**P1C-4PMA**
100	20	11,0	76	96	18,0	55	50	25	70	71	15	30	4°	1,42	**P1C-4QMA**
125	30	14,0	94	124	25,0	70	60	37	90	90	20	40	4°	3,10	**P1C-4RMA**

3 and 4 positions flange JP1 (9)

Mounting kit for back to back mounted cylinders, 3 and 4 position cylinders.

Material:
Mounting: Aluminium
Mounting screws: Zinc-plated steel 8.8

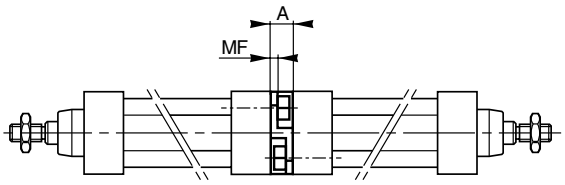

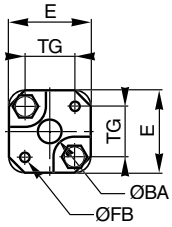

Cyl. bore mm	E mm	TG mm	ØFB mm	MF mm	A mm	ØBA mm	Weight Kg	**Order code**
32	50	32,5	6,5	5	16	30	0,060	**P1E-6KB0**
40	60	38,0	6,5	5	16	35	0,078	**P1E-6LB0**
50	66	46,5	8,5	6	20	40	0,162	**P1E-6MB0**
63	80	56,5	8,5	6	20	45	0,194	**P1E-6NB0**
80	100	72,0	10,5	8	25	45	0,450	**P1E-6PB0**
100	118	89,0	10,5	8	25	55	0,672	**P1E-6QB0**

Pivot brackets AT4 for MT* trunnion (10)

Intended for use together with the trunnion MT4.

Material
Pivot bracket: Surface-treated aluminium
Bearing acc. to DIN 1850 C: Sintered oil-bronze bushing

Supplied in pairs.

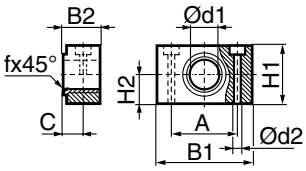

Cyl. bore mm	B1 mm	B2 mm	A mm	C mm	d1 mm	d2 H13 mm	H1 mm	H2 mm	fx45° min mm	Weight Kg	**Order code**
32	46	18,0	32	10,5	12	6,6	30	15	1,0	0,04*	**9301054261**
40	55	21,0	36	12,0	16	9,0	36	18	1,6	0,07*	**9301054262**
50	55	21,0	36	12,0	16	9,0	36	18	1,6	0,07*	**9301054262**
63	65	23,0	42	13,0	20	11,0	40	20	1,6	0,12*	**9301054264**
80	65	23,0	42	13,0	20	11,0	40	20	1,6	0,12*	**9301054264**
100	75	28,5	50	16,0	25	14,0	50	25	2,0	0,21*	**9301054266**
125	75	28,5	50	16,0	25	14,0	50	25	2,0	0,21*	**9301054266**

* Weight per item.

Type	Description	For mounting screws in stainless steel see page 46

Intermediate trunnion MT4 (12)

Intended for articulated mounting of cylinder. The trunnion is factory-fitted in the centre of the cylinder or at an optional location specified by the XV-measure – see the order code key. Combined with pivot brackets for MT4.
Material: zinc plated steel.

(12) **Trunnion with optional postion XV measure**
The intermediate trunnion for the P1D-S and P1D-C is ordered with a letter in position 17 and desired XV-measure (3-digits measure in mm) in positions 18-20. See the order code key.

Free trunnion
The centre trunnion for the P1D-S can also be ordered with the intermediate trunnion loosely fitted to the cylinder (not fixed in position). This allows the position to be established at the time of installation.
Ordered with a letter in position 17 and 000 in positions 18-20. Please refer to the order code key.
Digits 17: G letters mean shafts at 90° to air ports
Digits17: 7 numbers mean shafts in line with air ports

Note: XV measure is a number on 3 digits stated in mm (no decimals) in positions 18-20.

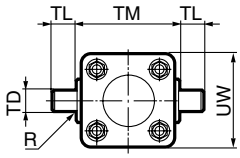

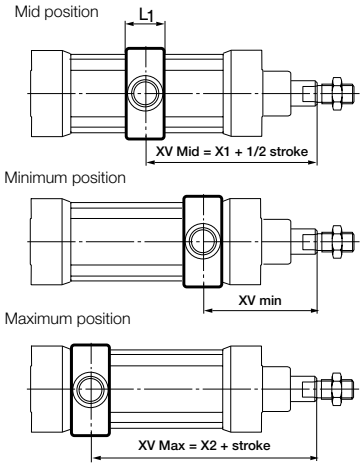

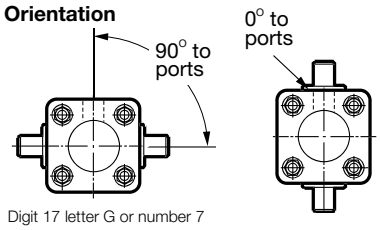

Cyl. bore	L1	TL h14	TM h14	ØTD e9	UW	XV min	X1 P1D-S	X2	XV min	X1 P1D-L	X2	XV min	X1 P1D-H	X2
mm	mm	mm	mm	mm	mm	mm	mm	mm	mm	mm	mm	mm	mm	mm
32	18	12	50	12	52	89	73	57	160	105	88.5	137	121	105
40	20	16	63	16	59	95	82.5	70	124	112	99.0	150	137.5	125
50	20	16	75	16	71	113	90	67	139.5	117	93.5	183	160	137
63	26	20	90	20	84	118	97.5	77	154.5	135	113.5	188	167.5	147
80	26	20	110	20	105	132	110	88	176.5	155	132.5	222	200	178
100	32	25	132	25	129	140	120	100	196.5	177	156.5	232	212	192
125	33	25	160	25	159	168	145	122	223.5	201	177.5	290	267	244

Important: If the cylinder is ordered with a piston rod protusion (WH dimension), please add this extra length to XVmin, XV and XVmax.

Flange trunnion (11)
MT5/MT6

Intended for articulated mounting of cylinder. This trunnion can be flange mounted on the front or rear end covers of all P1D cylinders.

Material:
Trunnion: zinc plated steel
Screws: zinc plated steel, 8.8
Delivered complete with mounting screws for attachment to the cylinder

Cyl. bore mm	TM h14 mm	TL h14 mm	TD e9 mm	R mm	UW mm	L1 mm	XV_1* mm	XV_2* mm	Weight Kg	**Order code**
32	50	12	12	1,0	46	14	19,5	127,0	0,17	**P1D-4KMYF**
40	63	16	16	1,6	59	19	21,0	144,5	0,43	**P1D-4LMYF**
50	75	16	16	1,6	69	19	28,0	152,5	0,55	**P1D-4MMYF**
63	90	20	20	1,6	84	24	25,5	170,0	1,10	**P1D-4NMYF**
80	110	20	20	1,6	102	24	34,5	186,0	1,66	**P1D-4PMYF**
100	132	25	25	2,0	125	29	37,0	203,5	3,00	**P1D-4QMYF**

* Does not apply to cylinders with lock unit or with protusion of the piston rod

To fit a flange mounted trunnion at the front end cover of a cylinder with lock unit, the piston rod must be extended. This is in order to provide the same WH dimensions as for the P1D base cylinder.

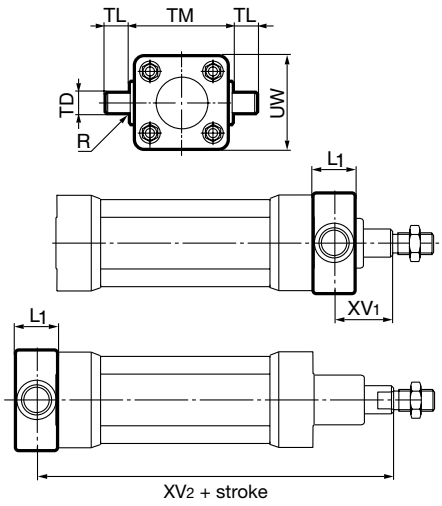

Type	Description

Swivel rod eye AP6 ⑬

Swivel rod eye for articulated mounting of cylinder.
Swivel rod eye can be combined with clevis bracket AB6.
Maintenance-free.

Materials
Swivel rod eye: Zinc-plated steel
Swivel bearing according to DIN 648K: Hardened steel

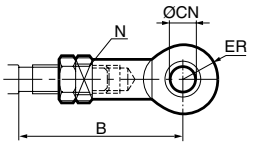

Stainless steel swivel rod eye AP6 ⑬

Stainless-steel swivel rod eye for articulated mounting of cylinder. Swivel rod eye can be combined with clevis bracket AB6.
Maintenance-free.

Materials
Swivel rod eye: Stainless steel
Swivel bearing according to DIN 648K: Stainless steel

Use stainless steel nut with stainless steel swivel rod eye.

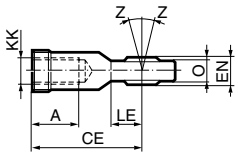

According to ISO 8139

Cyl. bore mm	A mm	B min mm	B max mm	CE mm	CN H9 mm	EN h12 mm	ER mm	KK	LE min mm	N mm	O mm	Z	Weight Kg	Order code Swivel rod eye AP6	Order code Stainless steel swivel rod eye AP6
32	20	48,0	55	43	10	14	14	M10x1,25	15	17	10,5	12°	0,08	**P1C-4KRS**	**P1S-4JRT**
40	22	56,0	62	50	12	16	16	M12x1,25	17	19	12,0	12°	0,12	**P1C-4LRS**	**P1S-4LRT**
50	28	72,0	80	64	16	21	21	M16x1,5	22	22	15,0	15°	0,25	**P1C-4MRS**	**P1S-4MRT**
63	28	72,0	80	64	16	21	21	M16x1,5	22	22	15,0	15°	0,25	**P1C-4MRS**	**P1S-4MRT**
80	33	87,0	97	77	20	25	25	M20x1,5	26	32	18,0	15°	0,46	**P1C-4PRS**	**P1S-4PRT**
100	33	87,0	97	77	20	25	25	M20x1,5	26	32	18,0	15°	0,46	**P1C-4PRS**	**P1S-4PRT**
125	51	123,5	137	110	30	37	35	M27x2	36	41	25,0	15°	1,28	**P1C-4RRS**	**P1S-4RRT**

Clevis AP2 ⑭

Clevis for articulated mounting of cylinder.

Material
Clevis, clip: Galvanized steel
Pin: Hardened steel

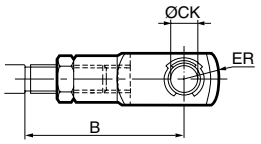

Stainless steel clevis AP2 ⑭

Stainless-steel clevis for articulated mounting of cylinder.

Material
Clevis: Stainless steel
Pin: Stainless steel
Circlips according to DIN 471: Stainless steel

Use stainless steel nut with stainless steel swivel rod eye.

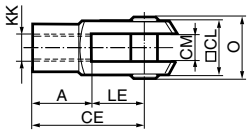

According to ISO 8140

Cyl. bore mm	A mm	B min mm	B max mm	CE mm	CK h11/E9 mm	CL mm	CM mm	ER mm	KK	LE mm	O mm	Weight Kg	Order code Clevis AP2	Order code Stainless steel Clevis AP2
32	20	45,0	52	40	10	20	10	16	M10x1,25	20	28,0	0,09	**P1C-4KRC**	**P1S-4JRD**
40	24	54,0	60	48	12	24	12	19	M12x1,25	24	32,0	0,15	**P1C-4LRC**	**P1S-4LRD**
50	32	72,0	80	64	16	32	16	25	M16x1,5	32	41,5	0,35	**P1C-4MRC**	**P1S-4MRD**
63	32	72,0	80	64	16	32	16	25	M16x1,5	32	41,5	0,35	**P1C-4MRC**	**P1S-4MRD**
80	40	90,0	100	80	20	40	20	32	M20x1,5	40	50,0	0,75	**P1C-4PRC**	**P1S-4PRD**
100	40	90,0	100	80	20	40	20	32	M20x1,5	40	50,0	0,75	**P1C-4PRC**	**P1S-4PRD**
125	56	123,5	137	110	30	55	30	45	M27x2	54	72,0	2,10	**P1C-4RRC**	**P1S-4RRD**

Type | Description

Flexo coupling PM5 (15)

Flexo coupling for articulated mounting of piston rod. Flexo fitting is intended to take up axial angle errors within a range of ±4°.

Material
Flexo coupling, nut: Zinc-plated steel

Supplied complete with galvanized adjustment nut.

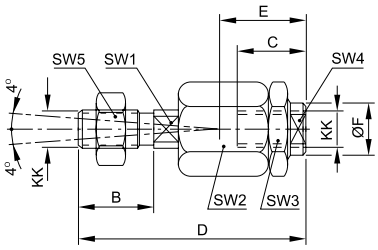

Cyl. bore mm	KK mm	B mm	C mm	D mm	E mm	ØF mm	SW1 mm	SW2 mm	SW3 mm	SW4 mm	SW5 mm	Weight Kg	**Order code**
32	M10x1.25	20	23	73	31	21	12	30	30	19	17	0,21	**P1C-4KRF**
40	M12x1.25	24	23	77	31	21	12	30	30	19	19	0,22	**P1C-4LRF**
50	M16x1.5	32	32	108	45	33.5	19	41	41	30	24	0,67	**P1C-4MRF**
63	M16x1.5	32	32	108	45	33.5	19	41	41	30	24	0,67	**P1C-4MRF**
80	M20x1.5	40	42	122	56	33.5	19	41	41	30	30	0,72	**P1C-4PRF**
100	M20x1.5	40	42	122	56	33.5	19	41	41	30	30	0,72	**P1C-4PRF**
125	M27x2	54	48	147	51	39	24	55	55	32	41	1,80	**P1C-4RRF**

Nut MR9 (16)

Intended for fixed mounting of accessories to the piston rod.
Material: Zinc-plated steel

All P1D cylinders are delivred with a zinc-plated steel piston rod nut, except P1D Pro Clean, which is delivered with a stainless steel piston rod nut instead.

Stainless steel nut MR9 (16)

Intended for fixed mounting of accessories to the piston rod.

Material: Stainless steel A2

All P1D cylinders are delivred with a zinc-plated steel piston rod nut, exceptP1D-C delivered with a stainless steel piston rod nut instead.

Acid-proof nut MR9 (16)

Intended for fixed mounting of accessories to the piston rod.

Material: Acid-proof steel A4

Cylinders with acid-proof piston rod are supplied with nut of acid-proof steel

According to DIN 439 B

Cyl. bore mm	A mm	B mm	C	Weight Kg	**Nut MR9**	**Order code Stainless steel nut MR9**	**Acid-proof nut MR9**
32	17	5,0	M10x1,25	0,007	**P14-4KRPZ**	**P14-4KRPS**	**P14-4KRPX**
40	19	6,0	M12x1,25	0,010	**P14-4LRPZ**	**P14-4LRPS**	**P14-4LRPX**
50	24	8,0	M16x1,5	0,021	**P14-4MRPZ**	**P14-4MRPS**	**P14-4MRPX**
63	24	8,0	M16x1,5	0,021	**P14-4MRPZ**	**P14-4MRPS**	**P14-4MRPX**
80	30	10,0	M20x1,5	0,040	**P14-4PRPZ**	**P14-4PRPS**	**P14-4PRPX**
100	30	10,0	M20x1,5	0,040	**P14-4PRPZ**	**P14-4PRPS**	**P14-4PRPX**
125	41	13,5	M27x2	0,100	**P14-4RRPZ**	**P14-4RRPS**	**P14-4RRPX**

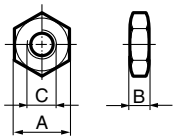

Supplied as pack of 10 off
Weight per item

Type	Description	Cyl. bore Ø mm	Weight Kg	Order code
Stainless steel screw set for MP2, MP4, MS1 and AB6	Set of stainless steel screws for fitting clevis brackets MP2, MP4 and AB6 onto the cylinder. The screws have an internal hexagonal head and are used in special environments, e.g. the food industry, or where there are extra demands for protection against corrosion. Material: According to DIN 912, Stainless steel, A2 4 pcs per pack.	32	0,02	**9301054321**
		40	0,02	**9301054321**
		50	0,05	**9301054322**
		63	0,05	**9301054322**
		80	0,09	**9301054323**
		100	0,09	**9301054323**
		125	0,15	**9301054324**
Stainless steel screw set for MF1/MF2	Set of stainless steel screws for fitting flanges MF1/MF2 onto the cylinder. The screws have an internal hexagonal head and are used in special environments, e.g. the food industry, or where there are extra demands for protection against corrosion. Material: According to DIN 6912, Stainless steel, A2 4 pcs per pack	32	0,02	**9301054331**
		40	0,02	**9301054331**
		50	0,04	**9301054332**
		63	0,04	**9301054332**
		80	0,07	**9301054333**
		100	0,07	**9301054333**
		125	0,12	**9301054334**
Sealing plugs for end cover screws	Set of 4 threaded plugs to be fitted in unused end cover screws. A rubber gasket is supplied with every plug. The seal off function is equal to IP67. The plugs can be used for all P1D cylinders to avoid collecting dirt and fluids in the end cover screw recesses. Material: Plug Polyamid PA Gasket Nitrile rubber 4 pcs per pack	32	0,01	**460104801**
		40	0,01	**460104801**
		50	0,02	**460104802**
		63	0,02	**460104802**
		80	0,02	**460104803**
		100	0,02	**460104803**
		125	0,03	**460104804**

Stainless steel pin AA6 set for AB6 mounting

Materials
Pin: stainless steel
Locking pin: stainless steel
Circlips according to DIN 471: stainless steel

Cyl. Bore Ø mm	Weight Kg	Order code
32	0.05	**9301054311**
40	0.06	**9301054312**
50	0.07	**9301054313**
63	0.07	**9301054314**
80	0.17	**9301054315**
100	0.31	**9301054316**
125	0.54	**9301054317**

Stainless steel pin AA4 set for MP2 mounting

Materials
Pin: stainless steel
Locking pin: stainless steel
Circlips according to DIN 471: stainless steel

Cyl. Bore Ø mm	Weight Kg	Order code
32	0.07	**on request**
40	0.08	**on request**
50	0.09	**on request**
63	0.09	**on request**
80	0.19	**on request**
100	0.33	**on request**
125	0.56	**on request**

Drop-in sensors

The P1D sensors can easily be installed from the side in the sensor groove, at any position along the piston stroke.
The sensors are completely recessed and thus mechanically protected. Choose between electronic or reed sensors and several cable lengths and 8 mm and M12 connectors.
The same standard sensors are used for all P1D versions.

Electronic sensors

The electronic sensors are "Solid State", i.e. they have no moving parts at all. They are provided with short-circuit protection and transient protection as standard. The built-in electronics make the sensors suitable for applications with high on and off switching frequency, and where very long service life is required.

Technical data

Design	GMR (Giant Magnetic Resistance) magneto-resistive function
Installation	From side, down into the sensor groove, so-called drop-in
Outputs	PNP, normally open (also available in NPN design, normally closed, on request)
Voltage range	10-30 VDC 10-18 V DC, ATEX sensor
Ripple	max 10%
Voltage drop	max 2,5 V
Load current	max 100 mA
Internal consumption	max 10 mA
Actuating distance	min 9 mm
Hysteresis	max 1,5 mm
Repeatability accuracy	max 0,2 mm
On/off switching frequency	max 5 kHz
On switching time	max 2 ms
Off switching time	max 2 ms
Encapsulation	IP 67 (EN 60529)
Temperature range	–25 °C to +75 °C –20 °C to +45 °C, ATEX sensor
Indication	LED, yellow
Material housing	PA 12
Material screw	Stainless steel
Cable	PVC or PUR 3x0.25 mm^2 see order code respectively

Reed sensors

The sensors are based on proven reed switches, which offer reliable function in many applications. Simple installation, a protected position on the cylinder and clear LED indication are important advantages of this range of sensors.

Technical data

Design	Reed element
Mounting	From side, down into the sensor groove, so-called drop-in
Output	Normally open , or normally closed
Voltage range	10-30 V AC/DC or 10-120 V AC/DC 24-230 V AC/DC
Load current	max 500 mA for 10-30 V or max 100 mA for 10-120 V max 30 mA for 24-230 V
Breaking power (resistive)	max 6 W/VA
Actuating distance	min 9 mm
Hysteresis	max 1,5 mm
Repeatability accuracy	0,2 mm
On/off switching frequency	max 400 Hz
On switching time	max 1,5 ms
Off switching time	max 0,5 ms
Encapsulation	IP 67 (EN 60529)
Temperature range	–25 °C to +75 °C
Indication	LED, yellow
Material housing	PA12
Material screw	Stainless steel
Cable	PVC or PUR 3x0.14 mm^2 see order code respectively

Electronic sensors

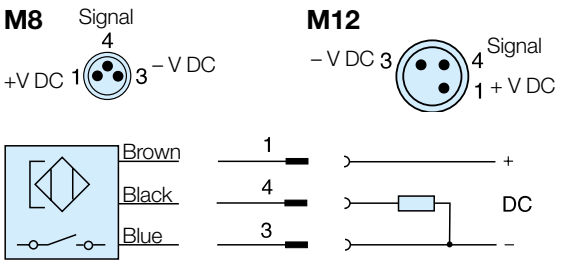

Reed sensors

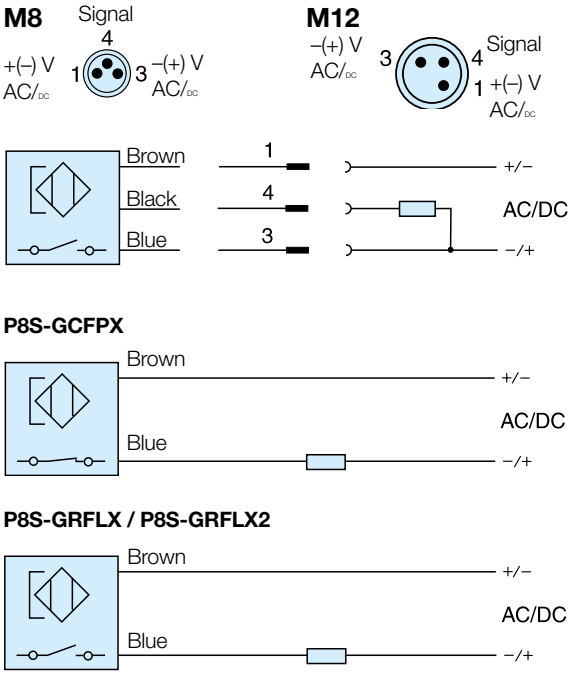

Dimensions (mm)

Sensors

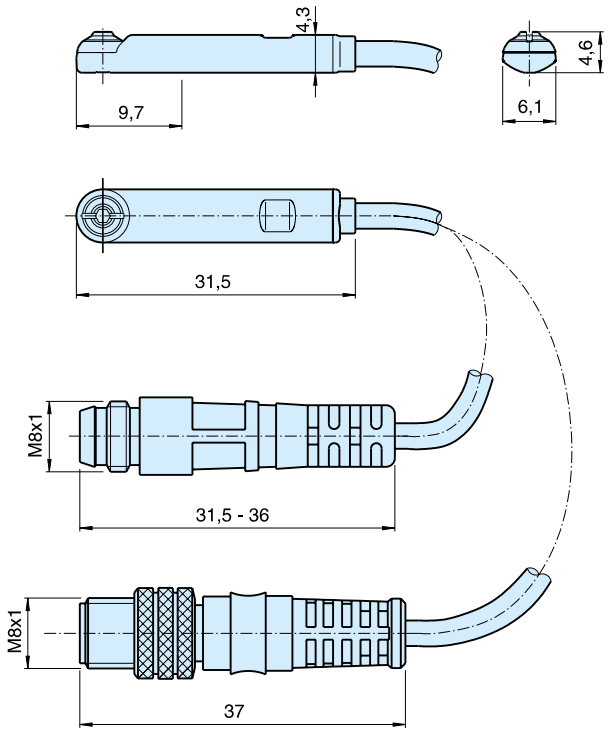

Sensor Installation

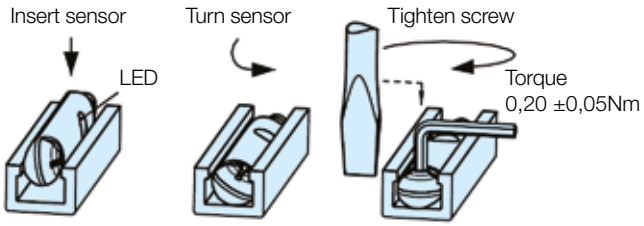

Ordering data

Output/function	Cable/connector	Weight kg	Order code
Electronic sensors , 10-30 V DC			
PNP type, normally open	0,27 m PUR-cable and 8 mm snap-in male connector	0,007	**P8S-GPSHX**
PNP type, normally open	0,27 m PUR-cable and M12 screw male connector	0,015	**P8S-GPMHX**
PNP type, normally open	3 m PVC-cable without connector	0,030	**P8S-GPFLX**
PNP type, normally open	10 m PVC-cable without connector	0,110	**P8S-GPFTX**
Reed sensors , 10-30 V AC/DC			
Normally open	0,27 m PUR-cable and 8 mm snap-in male connector	0,007	**P8S-GSSHX**
Normally open	0,27 m PUR-cable and M12 screw male connector	0,015	**P8S-GSMHX**
Normally open	3 m PVC-cable without connector	0,030	**P8S-GSFLX**
Normally open	10 m PVC-cable without connector	0,110	**P8S-GSFTX**
Normally closed	5m PVC-cable without connector [2]	0,050	**P8S-GCFPX**
Reed sensors, 10-120 V AC/DC			
Normally open	3 m PVC-cable without connector	0,030	**P8S-GRFLX**
Reed sensorer, 24-230 V AC/DC			
Normally open	3 m PVC-cable without connector	0,030	**P8S-GRFLX2**

2) Without LED

Connecting cables with one connector

The cables have an integral snap-in female connector.

Type of cable	Cable/connector	Weight kg	Order code
Cables for sensors, complete with one female connector			
Cable, Flex PVC	3 m, 8 mm Snap-in connector	0,07	**9126344341**
Cable, Flex PVC	10 m, 8 mm Snap-in connector	0,21	**9126344342**
Cable, Polyurethane	3 m, 8 mm Snap-in connector	0,01	**9126344345**
Cable, Polyurethane	10 m, 8 mm Snap-in connector	0,20	**9126344346**
Cable, Polyurethane	5 m, M12 screw connector	0,07	**9126344348**
Cable, Polyurethane	10 m, M12 screw connector	0,20	**9126344349**

Male connectors for connecting cables

Cable connectors for producing your own connecting cables. The connectors can be quickly attached to the cable without special tools. Only the outer sheath of the cable is removed. The connectors are available for M8 and M12 screw connectors and meet protection class IP 65.

Technical data

Operating voltage	max. 32 V AC/DC
Operating current per contact	max. 4 A
Connection cross section	0.25...0.5mm^2 (conductor diameter min 0.1mm)
Protection	IP65 and IP67 when plugged and screwed down (EN 60529)
Temperature range	-25...+85 °C

Connector	Weight kg	Order code
M8 screw connector	0,017	**P8CS0803J**
M12 screw connector	0,022	**P8CS1204J**

P1D Seal kits

Complete seal kits consisting of:

- Piston seals
- Cushioning seals
- Combined piston rod seal and scraper
- O-rings

P1D Cylinder version, single piston rod, piston made in plastic				
Cyl. bore mm	Standard temperature	Standard temperature with scraper / rod seal made in FPM	Standard temperature with HDPE sealing	Standard temperature with dynamic rod lock
32	**P1D-6KRN**	**P1D-6KRV**	**P1D-6KRD**	**P1D-6KRNL**
40	**P1D-6LRN**	**P1D-6LRV**	**P1D-6LRD**	**P1D-6LRNL**
50	**P1D-6MRN**	**P1D-6MRV**	**P1D-6MRD**	**P1D-6MRNL**
63	**P1D-6NRN**	**P1D-6NRV**	**P1D-6NRD**	**P1D-6NRNL**
80	**P1D-6PRN**	**P1D-6PRV**	**P1D-6PRD**	**P1D-6PRNL**
100	**P1D-6QRN**	**P1D-6QRV**	**P1D-6QRD**	**P1D-6QRNL**
125	**P1D-6RRN**	**P1D-6RRV**	**P1D-6RRD**	**P1D-6RRNL**

P1D Cylinder version, through piston rod, piston made in plastic				
Cyl. bore mm	Standard temperature	Standard temperature with scraper / rod seal made in FPM	Standard temperature with HDPE sealing	Standard temperature with dynamic rod lock
32	**P1D-6KRNF**	**On request**	**On request**	**On request**
40	**P1D-6LRNF**	**On request**	**On request**	**On request**
50	**P1D-6MRNF**	**On request**	**On request**	**On request**
63	**P1D-6NRNF**	**On request**	**On request**	**On request**
80	**P1D-6PRNF**	**On request**	**On request**	**On request**
100	**P1D-6QRNF**	**On request**	**On request**	**On request**
125	**P1D-6RRNF**	**On request**	**On request**	**On request**

As the P1D Series was also available for high (ie MF) and low (ie ML) temperature ranges, hydraulic (ie MJ) version and with metallic scraper (ie QC) options, here with are the part numbers for the maintenance for these cylinders.

Important: it is not possible to convert a P1D built for standard temperature to a high, low temp or hydraulic version because end caps and piston are not the same.

Note: These options are now available in the P1D-X Series only.

P1D Cylinder version, single piston rod				
Cyl. bore mm	Standard temperature with metallic scraper	Low temperature	High temperature	Hydraulic version
32	**P1D-6KRQ**	**P1D-6KRLX**	**P1D-6KRFX**	**P1D-6KRHX**
40	**P1D-6LRQ**	**P1D-6LRL**	**P1D-6LRF**	**P1D-6LRH**
50	**P1D-6MRQ**	**P1D-6MRLX**	**P1D-6MRFX**	**P1D-6MRHX**
63	**P1D-6NRQ**	**P1D-6NRL**	**P1D-6NRF**	**P1D-6NRH**
80	**P1D-6PRQ**	**P1D-6PRL**	**P1D-6PRF**	**P1D-6PRH**
100	**P1D-6QRQ**	**P1D-6QRL**	**P1D-6QRF**	**P1D-6QRH**
125	**P1D-6RRQ**	**P1D-6RRL**	**P1D-6RRF**	**P1D-6RRH**

Greases

Standard	30g	**9127394541**
High temperature	30g	**9127394521**
Low temperature	30g	**9127394541**

P1D Seal kits

= Included in seal kit
= Screwdriver head
= Insexgrepp
= Tightening torque
= Lubricated with grease
= Locking fluid

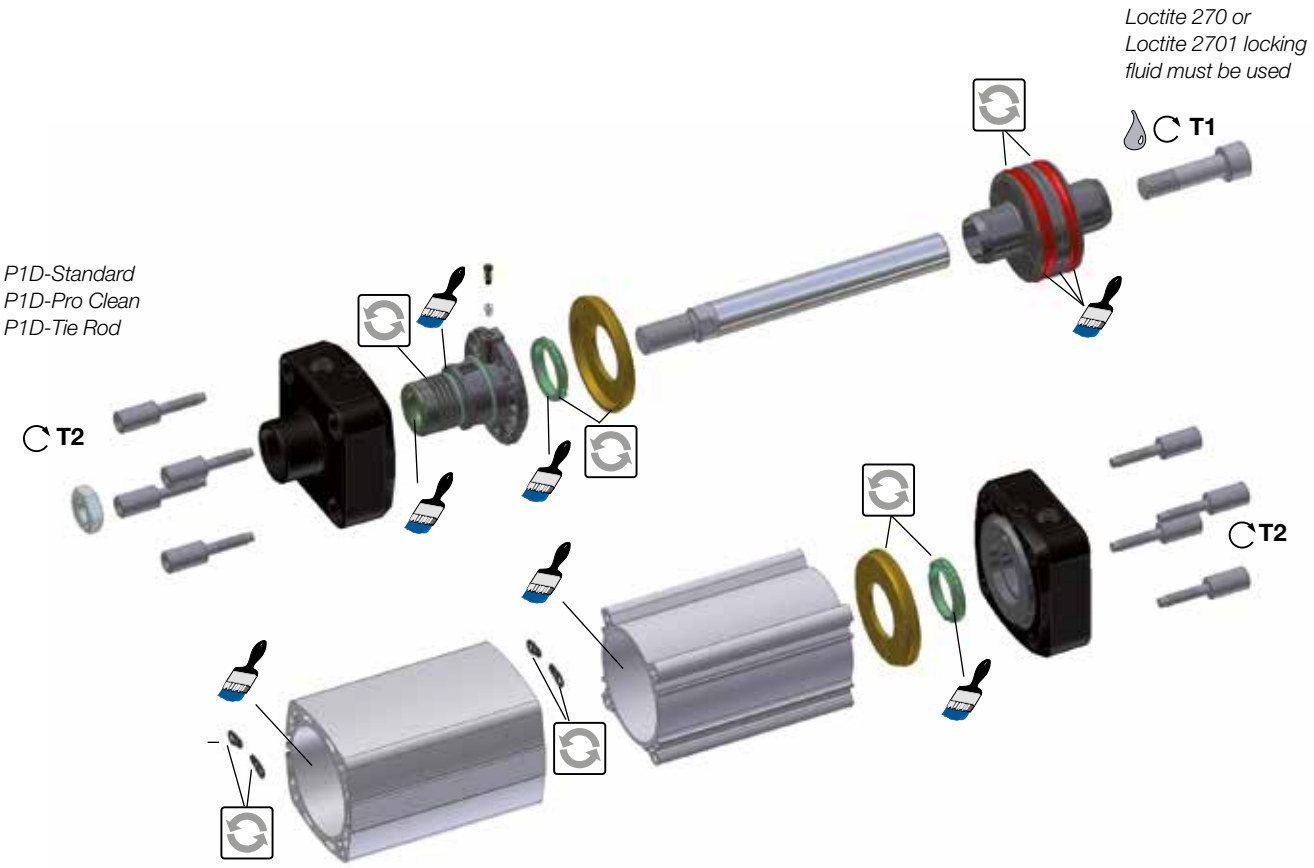

Cyl.-dia mm	Plastic piston T1 Nm	Alu. piston T1 Nm	NV mm	T2 Nm	NV mm
32	4,5	15	6	8	6
40	11	30	8	8	6
50	20	40	10	20	8
63	20	40	10	20	8
80	40	120	14	20	6
100	120	120	14	20	6
125	120	120	14	70	8

Order code key, spare parts

1	2	3	4	5	6	7	8	9	10	11	12	13	14	15
P	1	D	-	8	0	3	2	D	G	-	0	1	0	0

8	Spare parts

Cylinder dia. mm
032
040
050
063
080
100
125

Piston rod*	
D	Standard external thread
G	Standard internal thread
H	Through rod ext. threads
J	Through rod int. threads
F	Dynamic locking device ext.
K	Dynamic locking device int.
E	Static locking device ext.
C	Static locking device int.
Cylinder barrel	
A	Standard profile
M	Smooth profile (2 open T slots on one side)

Piston rod	
G	Stainless steel
H	Hard-chromium plated
J	Acid-resistant steel
K	Chromium plated stainless
Cylinder barrel	
A	Aluminium

* 2 piston rod pieces delivered in one set if through rod option selected

Stroke (mm) e.g. 0100 = 100 mm**

Any stroke up to max. 2800 mm.

** When ordering piston rods for cylinders with an extended piston rod, add together the stroke and the extension in the order key.
For example, a cylinder with stroke 100 mm and a piston rod extension of 25 mm is ordered with 0125 in the order number.

P1D with standard profile

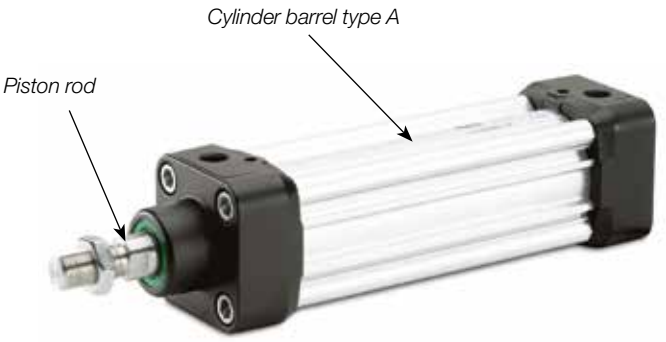

P1D with 2 open T slots

Use for P1D-V series with valve built on

Electrical connection EN175301-803 C/ISO15217 (Ex DIN 43650C)

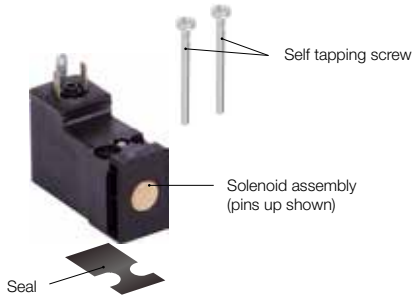

Solenoids 15 mm NC, standard

	Voltage	Weight Kg	Order code Without manual override	Weight Kg	Order code Override, blue, non locking flush	Weight Kg	Order code Override, yellow, locking flush
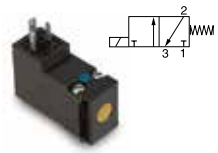	12 VDC	0,038	**P2E-KV32B0**	0,038	**P2E-KV32B1**	0,038	**P2E-KV32B2**
	24 VDC	0,038	**P2E-KV32C0**	0,038	**P2E-KV32C1**	0,038	**P2E-KV32C2**
	48 VDC	0,038	**P2E-KV32D0**	0,038	**P2E-KV32D1**	0,038	**P2E-KV32D2**
	24 VAC 50Hz	0,038	**P2E-KV31C0**	0,038	**P2E-KV31C1**	0,038	**P2E-KV31C2**
	48 VAC 50/60Hz	0,038	**P2E-KV34D0**	0,038	**P2E-KV34D1**	0,038	**P2E-KV34D2**
	115 VAC 50Hz/ 120 VAC 60Hz	0,038	**P2E-KV31F0**	0,038	**P2E-KV31F1**	0,038	**P2E-KV31F2**
	230 VAC 50Hz/ 240 VAC 60Hz	0,038	**P2E-KV31J0**	0,038	**P2E-KV31J1**	0,038	**P2E-KV31J2**
	24 VDC			0,038	**P2E-KV32C3**	0,038	**P2E-KV32C4**
	24 VAC 50Hz			0,038	**P2E-KV31C3**	0,038	**P2E-KV31C4**

Solenoids 15 mm NC, mobile

(Note! Mounting screws included in basic valve)

	Voltage	Weight Kg	Order code Without manual override	Weight Kg	Order code Override, blue, non locking flush
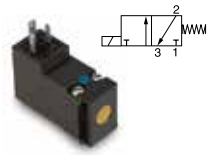	12 VDC	0,038	**P2E-MV35B0**	0,038	**P2E-MV35B1**
	24 VDC	0,038	**P2E-MV35C0**	0,038	**P2E-MV35C1**
	37,5 VDC	0,038	**P2E-MV35W0**	0,038	**P2E-MV35W1**
	48 VDC	0,038	**P2E-MV35D0**	0,038	**P2E-MV35D1**
	72 VDC	0,038	**P2E-MV35T0**	0,038	**P2E-MV35T1**
	78 VDC	0,038	**P2E-MV35Y0**	0,038	**P2E-MV35Y1**
	96 VDC	0,038	**P2E-MV35V0**	0,038	**P2E-MV35V1**
	110 VDC	0,038	**P2E-MV35E0**	0,038	**P2E-MV35E1**

Solenoid Connectors / Cable Plugs EN175301-803

	Description	Order code 15mm Form C/ISO15217
With large headed screw suitable for mounting in inaccessible or recess position	Standard IP65	**P8C-C**
	24V DC LED and protection IP65	**P8C-C26C**
With standard screw	110V AC LED and protection IP65	**P8C-C21E**
	Standard IP65 without flying lead	**P8C-D**
	With LED and protection 24V AC/DC	**P8C-D26C**
With cable	With LED and protection 110V AC/DC	**P8C-D21E**
	Standard with 2m cable IP65	**P8L-C2**
	Standard with 5m cable IP65	**P8L-C5**
	24V AC/DC, 2m cable LED and protection IP65	**P8L-C226C**
	24V AC/DC, 5m cable LED and protection IP65	**P8L-C526C**
	24V AC/DC, 10m cable LED and protection IP65	**P8L-CA26C**
	110V AC/DC, 2m cable LED and protection IP65	**P8L-C221E**
	110V AC/DC, 5m cable LED and protection IP65	**P8L-C521E**

Air Reservoirs

The Air Reservoirs is produced by a cylinder tube and two standard rear end covers. The reservoirs is kept together with standard end cover screws and sealed with standard static end cover seals. It's available in two versions, one with foot bracket and one without.

Material specification

Body extrusion:	Natural colour, anodised aluminium
End covers:	Black anodised aluminium
End cover screws:	Zinc plated steel 8.8.
Seals:	PUR

Operation data

Working pressure:	Max 10 bar,
Working Temperature:	Max 80'C

Important

Pressure Equipment Directive.
According (PED) to the directive 97/23/EC, for uncertified pressure vessels: Max Working pressure x Volume maximized to 50 Bar x Litre, i.e. max 10 bar and 5 litres volume.
In accordance we therefore maximized the volume to max 5 litres

Order codes

Volume cm³	Without foot bracket.	With foot bracket
75	**P1DVS032MA-0050**	**P1DVS032MB-0050**
280	**P1DVS050MA-0100**	**P1DVS050MB-0100**
480	**P1DVS050MA-0200**	**P1DVS050MB-0200**
1030	**P1DVS080MA-0160**	**P1DVS080MB-0160**
1870	**P1DVS080MA-0320**	**P1DVS080MB-0320**
3090	**P1DVS125MA-0200**	**P1DVS125MB-0200**
4680	**P1DVS125MA-0320**	**P1DVS125MB-0320**

Using of Air Reservoirs

Air reservoirs are used, e.g. together with throttle valves to achieve a timer function in a pneumatic system.
The delay of time will be varies by changing the throttle valve and by the size of air reservoir.
With a well functional throttle valve and a suitable air reservoir it would be possible to achieve a accuracy of ± 5%..
The reservoir is also used to equal pressure various into the system and to handling short extreme air consumptions without functional disorders.
The air reservoirs could also be used together with check valve in order to retain a pressure which is essential, for example safety reasons.

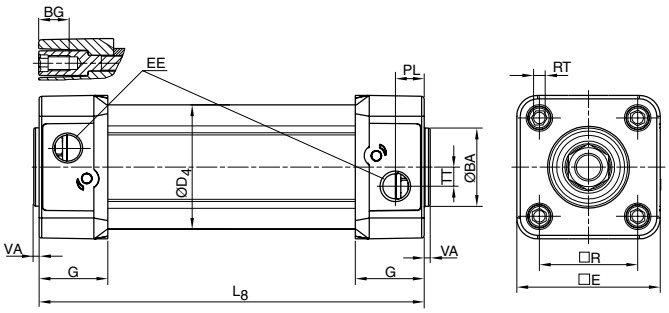

Dimensions (mm)

Order codes	BA mm	BG mm	D4 mm	E mm	EE mm	G mm	L8 mm	PL mm	R mm	RT	TT mm	VA mm
P1DVS032MA-0050	30	16	45,0	50,0	G1/8	28,5	144	13,0	32,5	M6	4,5	3,5
P1DVS050MA-0100	40	16	60,7	69,4	G1/4	33,5	206	14,0	46,5	M8	7,5	3,5
P1DVS050MA-0200	40	16	60,7	69,4	G1/4	33,5	306	14,0	46,5	M8	7,5	3,5
P1DVS080MA-0160	45	17	86,7	99,4	G3/8	39,5	288	16,0	72,0	M10	15,0	3,5
P1DVS080MA-0320	45	17	86,7	99,4	G3/8	39,5	458	16,0	72,0	M10	15,0	3,5
P1DVS125MA-0200	60	20	134,0	139,0	G1/2	51,0	360	28,0	110,0	M12	17,5	5,5
P1DVS125MA-0320	60	20	134,0	139,0	G1/2	51,0	480	28,0	110,0	M12	17,5	5,5

Order codes	AB mm	TG1 mm	E mm	TR mm	AO mm	AU mm	AH mm	I7 mm	AT mm	I9 mm	SA mm
P1DVS032MB-0050	7	32,5	45	32	10	24	32	30	4,5	17,0	192
P1DVS050MB-0100	9	46,5	65	45	13	32	45	36	5,5	25,0	270
P1DVS050MB-0200	9	46,5	65	45	13	32	45	36	5,5	25,0	370
P1DVS080MB-0160	12	72,0	95	63	14	41	63	49	6,5	40,5	370
P1DVS080MB-0320	12	72,0	95	63	14	41	63	49	6,5	40,5	530
P1DVS125MB-0200	16	110,0	140	90	22	45	90	71	8,0	60,0	450
P1DVS125MB-0320	16	110,0	140	90	22	45	90	71	8,0	60,0	570

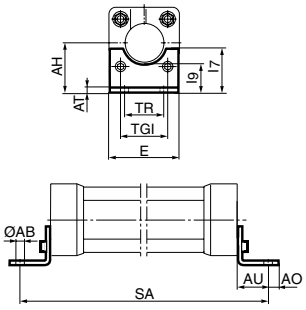

Specifying air quality (purity) in accordance with ISO8573-1:2010, the international standard for Compressed Air Quality

ISO8573-1 is the primary document used from the ISO8573 series as it is this document which specifies the amount of contamination allowed in each cubic metre of compressed air.

ISO8573-1 lists the main contaminants as Solid Particulate, Water and Oil. The purity levels for each contaminant are shown separately in tabular form, however for ease of use, this document combines all three contaminants into one easy to use table.

ISO8573-1:2010 CLASS	Solid Particulate				Water		Oil
	Maximum number of particles per m^3			Mass Concentration mg/m^3	Vapour Pressure Dewpoint	Liquid g/m^3	Total Oil (aerosol liquid and vapour) mg/m^3
	0,1 - 0,5 micron	0,5 - 1 micron	1 - 5 micron				
0	As specified by the equipment user or supplier and more stringent than Class 1						
1	≤ 20 000	≤ 400	≤ 10	-	≤ -70 °C	-	0,01
2	≤ 400 000	≤ 6 000	≤ 100	-	≤ -40 °C	-	0,1
3	-	≤ 90 000	≤ 1 000	-	≤ -20 °C	-	1
4	-	-	≤ 10 000	-	≤ +3 °C	-	5
5	-	-	≤ 100 000	-	≤ +7 °C	-	-
6	-	-	-	≤ 5	≤ +10 °C	-	-
7	-	-	-	5 - 10	-	≤ 0,5	-
8	-	-	-	-	-	0,5 - 5	-
9	-	-	-	-	-	5 - 10	-
X	-	-	-	> 10	-	> 10	> 10

Specifying air purity in accordance with ISO8573-1:2010

When specifying the purity of air required, the standard must always be referenced, followed by the purity class selected for each contaminant (a different purity class can be selected for each contamination if required).

An example of how to write an air quality specification is shown below:

ISO 8573-1:2010 Class 1.2.1

ISO 8573-1:2010 refers to the standard document and its revision, the three digits refer to the purity classifications selected for solid particulate, water and total oil. Selecting an air purity class of 1.2.1 would specify the following air quality when operating at the standard's reference conditions :

Class 1 - Particulate

In each cubic metre of compressed air, the particulate count should not exceed 20,000 particles in the 0.1 - 0.5 micron size range, 400 particles in the 0.5 - 1 micron size range and 10 particles in the 1 - 5 micron size range.

Class 2 - Water

A pressure dewpoint (PDP) of -40°C or better is required and no liquid water is allowed.

Class 1 - Oil

In each cubic metre of compressed air, not more than 0.01mg of oil is allowed. This is a total level for liquid oil, oil aerosol and oil vapour.

ISO8573-1:2010 Class zero

- **Class 0 does not mean zero contamination.**
- **Class 0 requires the user and the equipment manufacturer to agree contamination levels as part of a written specification.**
- **The agreed contamination levels for a Class 0 specification should be within the measurement capabilities of the test equipment and test methods shown in ISO8573 Pt 2 to Pt 9.**
- **The agreed Class 0 specification must be written on all documentation to be in accordance with the standard.**
- **Stating Class 0 without the agreed specification is meaningless and not in accordance with the standard.**
- **A number of compressor manufacturers claim that the delivered air from their oil-free compressors is in compliance with Class 0.**
- **If the compressor was tested in clean room conditions, the contamination detected at the outlet will be minimal. Should the same compressor now be installed in typical urban environment, the level of contamination will be dependent upon what is drawn into the compressor intake, rendering the Class 0 claim invalid.**
- **A compressor delivering air to Class 0 will still require purification equipment in both the compressor room and at the point of use for the Class 0 purity to be maintained at the application.**
- **Air for critical applications such as breathing, medical, food, etc typically only requires air quality to Class 2.2.1 or Class 2.1.1.**
- **Purification of air to meet a Class 0 specification is only cost effective if carried out at the point of use.**

Parker Worldwide

Europe, Middle East, Africa

AE – United Arab Emirates, Dubai
Tel: +971 4 8127100
parker.me@parker.com

AT – Austria, Wiener Neustadt
Tel: +43 (0)2622 23501-0
parker.austria@parker.com

AT – Eastern Europe, Wiener Neustadt
Tel: +43 (0)2622 23501 900
parker.easteurope@parker.com

AZ – Azerbaijan, Baku
Tel: +994 50 2233 458
parker.azerbaijan@parker.com

BE/LU – Belgium, Nivelles
Tel: +32 (0)67 280 900
parker.belgium@parker.com

BG – Bulgaria, Sofia
Tel: +359 2 980 1344
parker.bulgaria@parker.com

BY – Belarus, Minsk
Tel: +48 (0)22 573 24 00
parker.poland@parker.com

CH – Switzerland, Etoy
Tel: +41 (0)21 821 87 00
parker.switzerland@parker.com

CZ – Czech Republic, Klecany
Tel: +420 284 083 111
parker.czechrepublic@parker.com

DE – Germany, Kaarst
Tel: +49 (0)2131 4016 0
parker.germany@parker.com

DK – Denmark, Ballerup
Tel: +45 43 56 04 00
parker.denmark@parker.com

ES – Spain, Madrid
Tel: +34 902 330 001
parker.spain@parker.com

FI – Finland, Vantaa
Tel: +358 (0)20 753 2500
parker.finland@parker.com

FR – France, Contamine s/Arve
Tel: +33 (0)4 50 25 80 25
parker.france@parker.com

GR – Greece, Athens
Tel: +30 210 933 6450
parker.greece@parker.com

HU – Hungary, Budaörs
Tel: +36 23 885 470
parker.hungary@parker.com

IE – Ireland, Dublin
Tel: +353 (0)1 466 6370
parker.ireland@parker.com

IL – Israel
Tel: +39 02 45 19 21
parker.israel@parker.com

IT – Italy, Corsico (MI)
Tel: +39 02 45 19 21
parker.italy@parker.com

KZ – Kazakhstan, Almaty
Tel: +7 7273 561 000
parker.easteurope@parker.com

NL – The Netherlands, Oldenzaal
Tel: +31 (0)541 585 000
parker.nl@parker.com

NO – Norway, Asker
Tel: +47 66 75 34 00
parker.norway@parker.com

PL – Poland, Warsaw
Tel: +48 (0)22 573 24 00
parker.poland@parker.com

PT – Portugal
Tel: +351 22 999 7360
parker.portugal@parker.com

RO – Romania, Bucharest
Tel: +40 21 252 1382
parker.romania@parker.com

RU – Russia, Moscow
Tel: +7 495 645-2156
parker.russia@parker.com

SE – Sweden, Spånga
Tel: +46 (0)8 59 79 50 00
parker.sweden@parker.com

SL – Slovenia, Novo Mesto
Tel: +386 7 337 6650
parker.slovenia@parker.com

TR – Turkey, Istanbul
Tel: +90 216 4997081
parker.turkey@parker.com

UA – Ukraine, Kiev
Tel: +48 (0)22 573 24 00
parker.poland@parker.com

UK – United Kingdom, Warwick
Tel: +44 (0)1926 317 878
parker.uk@parker.com

ZA – South Africa, Kempton Park
Tel: +27 (0)11 961 0700
parker.southafrica@parker.com

North America

CA – Canada, Milton, Ontario
Tel: +1 905 693 3000

US – USA, Cleveland
Tel: +1 216 896 3000

Asia Pacific

AU – Australia, Castle Hill
Tel: +61 (0)2-9634 7777

CN – China, Shanghai
Tel: +86 21 2899 5000

HK – Hong Kong
Tel: +852 2428 8008

IN – India, Mumbai
Tel: +91 22 6513 7081-85

JP – Japan, Tokyo
Tel: +81 (0)3 6408 3901

KR – South Korea, Seoul
Tel: +82 2 559 0400

MY – Malaysia, Shah Alam
Tel: +60 3 7849 0800

NZ – New Zealand, Mt Wellington
Tel: +64 9 574 1744

SG – Singapore
Tel: +65 6887 6300

TH – Thailand, Bangkok
Tel: +662 186 7000

TW – Taiwan, Taipei
Tel: +886 2 2298 8987

South America

AR – Argentina, Buenos Aires
Tel: +54 3327 44 4129

BR – Brazil, Sao Jose dos Campos
Tel: +55 800 727 5374

CL – Chile, Santiago
Tel: +56 2 623 1216

MX – Mexico, Toluca
Tel: +52 72 2275 4200

European Product Information Centre
Free phone: 00 800 27 27 5374
(from AT, BE, CH, CZ, DE, DK, EE, ES, FI, FR, IE, IL, IS, IT, LU, MT, NL, NO, PL, PT, RU, SE, SK, UK, ZA)

© 2017 Parker Hannifin Corporation. All rights reserved.

Catalogue PDE2570TCUK August - V11 - 2017

Parker Hannifin Ltd.
Tachbrook Park Drive
Tachbrook Park,
Warwick, CV34 6TU
United Kingdom
Tel.: +44 (0) 1926 317 878
Fax: +44 (0) 1926 317 855
parker.uk@parker.com
www.parker.com