## Theoretical force output form pressure mutual calculate form

● Cylinder force output :

$F = P \times A - f$

F: Cylinder force output(kgf) A: Piston area($cm^2$)

P: Work pressure($kgf/cm^2$) f: Friction resistance(kgf)

● Cylinder theoretical force output form:

| Bore(mm) | | | 12 | 16 | 20 | 25 | 32 | 40 |
|---|---|---|---|---|---|---|---|---|
| Axes Bore(mm) | | | 6 | 6 | 8 | 10 | 12 | 16 |
| Piston area($cm^2$) | | A1 | 1.1 | 2.0 | 3.1 | 4.9 | 8.0 | 12.6 |
| | | A2 | 0.8 | 1.7 | 2.6 | 4.1 | 6.9 | 10.6 |
| Working pressure ($kgf/cm^2$) | 1 | A1 | 1.1 | 2.0 | 3.1 | 4.9 | 8.0 | 12.6 |
| | | A2 | 0.8 | 1.7 | 2.6 | 4.1 | 6.9 | 10.6 |
| | 2 | A1 | 2.3 | 4.0 | 6.3 | 9.8 | 16.1 | 25.1 |
| | | A2 | 1.7 | 3.5 | 5.3 | 8.2 | 13.8 | 21.1 |
| | 3 | A1 | 3.4 | 6.0 | 9.4 | 14.7 | 24.1 | 37.7 |
| | | A2 | 2.5 | 5.2 | 7.9 | 12.4 | 20.7 | 31.7 |
| | 4 | A1 | 4.5 | 8.0 | 12.6 | 19.6 | 32.2 | 50.3 |
| | | A2 | 3.4 | 6.9 | 10.6 | 16.5 | 27.6 | 42.2 |
| | 5 | A1 | 5.7 | 10.1 | 15.7 | 24.5 | 40.2 | 62.8 |
| | | A2 | 4.2 | 8.6 | 13.2 | 20.6 | 34.6 | 52.8 |
| | 6 | A1 | 6.8 | 12.1 | 18.9 | 29.5 | 48.3 | 75.4 |
| | | A2 | 5.1 | 10.4 | 15.8 | 24.7 | 41.5 | 63.3 |
| | 7 | A1 | 7.9 | 14.1 | 22.0 | 34.4 | 56.3 | 88.0 |
| | | A2 | 5.9 | 12.1 | 18.5 | 28.9 | 48.4 | 73.9 |
| | 8 | A1 | 9.0 | 16.1 | 25.1 | 39.3 | 64.3 | 100.5 |
| | | A2 | 6.8 | 13.8 | 21.1 | 33.0 | 55.3 | 84.4 |
| | 9 | A1 | 10.2 | 18.1 | 28.3 | 44.2 | 72.4 | 113.1 |
| | | A2 | 7.6 | 15.6 | 23.7 | 37.1 | 62.2 | 95.0 |

| Bore(mm) | | | 50 | 63 | 80 | 100 | 125 | 160 |
|---|---|---|---|---|---|---|---|---|
| Axes Bore(mm) | | | 20 | 20 | 25 | 25 | 32 | 40 |
| Piston area($cm^2$) | | A1 | 19.6 | 31.2 | 50.3 | 78.5 | 122.7 | 201.1 |
| | | A2 | 16.5 | 28.0 | 45.4 | 73.6 | 114.7 | 188.5 |
| Working pressure ($kgf/cm^2$) | 1 | A1 | 19.6 | 31.2 | 50.3 | 78.5 | 122.7 | 201.1 |
| | | A2 | 16.5 | 28.0 | 45.4 | 73.6 | 114.7 | 188.5 |
| | 2 | A1 | 39.3 | 62.3 | 100.5 | 157.1 | 245.4 | 402.1 |
| | | A2 | 33.0 | 56.1 | 90.7 | 147.3 | 229.3 | 377.0 |
| | 3 | A1 | 58.9 | 93.5 | 150.8 | 235.6 | 368.1 | 603.2 |
| | | A2 | 49.5 | 84.1 | 136.1 | 220.9 | 344.0 | 565.5 |
| | 4 | A1 | 78.5 | 124.7 | 201.1 | 314.2 | 490.9 | 804.2 |
| | | A2 | 66.0 | 112.1 | 181.4 | 294.5 | 458.7 | 754.0 |
| | 5 | A1 | 98.2 | 155.9 | 251.3 | 392.7 | 613.6 | 1005.3 |
| | | A2 | 82.5 | 140.2 | 226.8 | 368.1 | 573.4 | 942.5 |
| | 6 | A1 | 117.8 | 187.0 | 301.6 | 471.2 | 736.3 | 1206.3 |
| | | A2 | 99.0 | 168.2 | 272.1 | 441.8 | 688.0 | 1130.9 |
| | 7 | A1 | 137.4 | 218.2 | 351.8 | 549.8 | 859.0 | 1407.4 |
| | | A2 | 115.5 | 196.2 | 317.5 | 515.4 | 802.7 | 1319.4 |
| | 8 | A1 | 157.1 | 249.4 | 402.1 | 628.3 | 981.7 | 1608.4 |
| | | A2 | 131.9 | 224.2 | 362.8 | 589.0 | 917.4 | 1507.9 |
| | 9 | A1 | 176.7 | 280.5 | 452.4 | 706.8 | 1104.4 | 1809.5 |
| | | A2 | 148.4 | 252.3 | 408.2 | 662.7 | 1032.1 | 1696.4 |

| Bore(mm) | | | 200 | 200 | 250 | 250 | 320 | 400 |
|---|---|---|---|---|---|---|---|---|
| Axes Bore(mm) | | | 40 | 50 | 50 | 55 | 63 | 80 |
| Piston area($cm^2$) | | A1 | 314.2 | 314.2 | 490.9 | 490.9 | 804.2 | 1256.6 |
| | | A2 | 301.6 | 294.5 | 471.2 | 471.2 | 773.1 | 1193.0 |
| Working pressure ($kgf/cm^2$) | 1 | A1 | 314.2 | 314.2 | 490.9 | 490.9 | 804.2 | 1256.0 |
| | | A2 | 301.6 | 294.5 | 471.2 | 467.1 | 773.1 | 1193.0 |
| | 2 | A1 | 628.3 | 628.3 | 981.7 | 981.7 | 1608.4 | 2513.2 |
| | | A2 | 603.2 | 589.0 | 942.5 | 934.2 | 1546.1 | 2386.0 |
| | 3 | A1 | 942.5 | 942.5 | 1472.6 | 1472.6 | 2412.7 | 3769.8 |
| | | A2 | 904.8 | 883.5 | 1413.7 | 1401.3 | 2319.2 | 3579.0 |
| | 4 | A1 | 1256.6 | 1256.6 | 1963.4 | 1963.4 | 3216.9 | 5026.4 |
| | | A2 | 1206.3 | 1178.1 | 1884.9 | 1868.4 | 3092.2 | 4771.9 |
| | 5 | A1 | 1570.8 | 1570.8 | 2454.3 | 2454.3 | 4021.1 | 6283.0 |
| | | A2 | 1507.9 | 1472.6 | 2356.1 | 2335.5 | 3865.3 | 5964.9 |
| | 6 | A1 | 1884.9 | 1884.9 | 2945.2 | 2945.2 | 4825.3 | 7539.6 |
| | | A2 | 1809.5 | 1767.1 | 2827.4 | 2802.6 | 4638.3 | 7157.9 |
| | 7 | A1 | 2199.1 | 2199.1 | 3436.0 | 3436.0 | 5629.6 | 8796.2 |
| | | A2 | 2061.6 | 2061.6 | 3298.6 | 3269.7 | 5411.4 | 8350.9 |
| | 8 | A1 | 2513.2 | 2513.2 | 3926.8 | 3926.9 | 6433.8 | 10052.8 |
| | | A2 | 2356.1 | 2356.1 | 3769.8 | 3736.8 | 6184.4 | 9543.9 |
| | 9 | A1 | 2827.4 | 2827.4 | 4417.7 | 4417.7 | 7238.0 | 11309.4 |
| | | A2 | 2650.6 | 2650.6 | 4241.0 | 4203.9 | 6957.5 | 10736.9 |

Note: Above all are theory datas,so before operation,please pay attention to the friction force and the mechanical effiency,and also calculate the actual figures.

● **Please read the safely notice carefully before using and pay attention to the safety caution of this product**

● **Pay attention to the individual caution for various model series(read the cautions and safety notice in p1–2 for common cautions)**

Caution for design, selection

Warning:

- Make thorough understanding to the characteristic of the compressed air and the application of this product while designing circuit
- Please use only the fluid stated on the catalog, don't use the fluid other than limited ,in order to prevent damage of product and affect the operation safely
- The air used is compressed air ,please note that expandable and unstable pressure will fly out ,burst out, or leak.
- Please used as per specification and within the specified conditions ;use secede the specification may cause hazard. please used as per the specification stated on the catalog, exceeding the pressure beyond the specification ,temperature and condition will cause poor action and affect the operation safely.
- Due to the mechanical design with the variation of wobbling movement of the cylinder, please pay attention flying objects and possible crash hazard of you limbs, resulting in body injury and mechanical damage and so on ;so ,take precaution upon designing.
- The movable range of cylinder may contact our body and cause injury, should be protected by safety guard to prevent direct contact body hazard.
- For larger mechanism or long stroke object ,the selected cylinder must equip with buffer device and provide with deceleration circuit to reduce and sooth the rigid impact of the mechanism device.

## Warning:

- Take the emergency or transient cut off power source .or power failure, air source circuit pressure drop causing holding force drop ,vertical movement slip and resulting in damage of mechanical device ,and human safety into account upon designing. so safety countermeasure should be taken in design.
- Take the driving mechanism and circuit control system combination into account upon design to avoid residue pressure in circuit .failure to completely positioning and lateral pressurized and other factors may cause high speed fly out of the object .these situations are very possible to cause body injury limbs crashed ,and damage of mechanism. countermeasure of protective circuit is necessary.
- Emergency stop device for mechanism is essential in case of malfunction, in addition to protective device. emergency stop device should be provided in order to prevent body injury and damage of equipment
- Re–start after emergency stop should confirm safety position of all mechanism, avoid interference and impact due to error position ,affect human body and damage the equipment ,there should have safety precaution countermeasure for restarting after emergency stop upon design.
- While applying three positions intermediate stop control in cylinder. Take the expansion property of air and low hydraulic operation ,the precise intermediate position difficulty into account for long period stop position ,consider the displacement cause by air leak ; please contact the sale unit of us in case of special application .
- Requirement of peripheral environment:
  1.avoid to be used in environment with chemical, inflammable. corrosive and sea water, high temperature;
  2.avoid to be used in the place with heating and irradiative heat.
  3.follow the requirement stated in the specification for ambient temperature;
  4.prevent poor action cause by frozen while use in cold climate;
  5.avoid the environment in outdoor with sun and dusty place, which cause unstable in quality;
  6.avoid to be used in oily, inflammable and explosion pool place.

## Caution:

- Prevent debris and dust from entering the cylinder while laying .which may cause failure and poor movement
- The use of cylinder should follow the principle of not exceeding max , stroke prevent the momentum force impact the front and rear cap of the piston.
- The in/outlet of the cylinder should be equipped with governor for controlling the traveling speed of the cylinder . it is preferable to control the cylinder by check out .
- The cylinder with long stroke should design with intermediate support, arbor and cylinder tube, if support on one side will cause static load deflection . in case of shock and loaded may tend to damage.
- Plural cylinder device't imultaneous moving structure, should be designed with guide rod to prevent interference and poor action.
- The axis of the cylinder should move consistence with load , no lateral load is allowed and will cause surface worm and damage of the arbor, and make the shaft seal packing damage resulting in leakage and poor action.
- At the portion of external guide rod or shaft end connection object , the shaft end connection must avoid connection interference . it is preferable to connect to floating coupling or angular adjustable device. Prevent damage cause by imbalance action and single side rubbing .
- The inner wall of cylinder and arbor are precise machine, avoid scratch and knock to this portion , especially damage of the outer tube of the cylinder tube will lead to deformation of tube wall, this is the cause of malfunction and damage of cylinder.
- The cylinder is equipped with adjustment of buffer device , it should be adjusted according to the actual moving speed and max . load condition , the adjustment of the needle valve of the buffer device should be in full close , this will cause the damage of buffer packing .
- Prevent debris and leak proof tape residue from entering the pipe while pipe laying and assembling the connector reserve 1–1.5 thread not wound with tape while winging the tape.

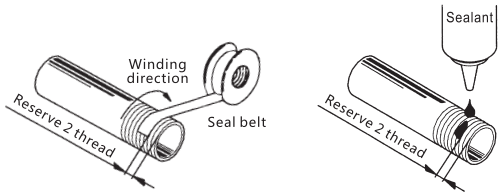


- If the connector is sealed by using anoxic glue , avoid excessive amount and fluid glue from flowing in the body . which may cause jammed and poor movement.
- Caution for installation and application of sensor
  1.confirm the specification and voltage value before usage:
  2.the fixation of tie band shouldn't be tilted and skew angled.
  3.when the sensor is connected to load with length of wire exceed 10m, equip one extra induction sensor nearby the sensor in order to prevent pulse and prevent contact tail to release .
  4.please don't exceed the specified voltage and current.
  5.add protective circuit when connected to induction load.
  6.if the lead wire of the solenoid switch is pulled by force. Twisted. wobbled or put heavy object on top . serious condition will cause short and damage of mechanism.
  7.there is 0.5m error between responses of solenoid switch .
- Please be careful and check all parts for securing before operation.

### Caution for service and maintenance

## Warning:

- Shut off the power switch and air source properly before service and maintenance, confirm that there is no residue pressure in the pipeline and start work after confirming the status is sate.
- The cylinder is coated with small amount of oil at initial using state; it will decrease after a period of usage. And should be added up with appropriate amount of oil according to actual application condition. Lubricant is essential in high speed moving ,limit to use iso–vg32 lubricant, feed by oil applicator, may cause poor action it stop oiled when it is required.
- While removing the cylinder shaft end , it shall work at position with piston pushing in the cylinder(don't pull the cylinder shaft out to serve installing and removing turning),and apply the force evenly to tighten in balance, and push by hand to confirm there is no interference and then start to supply air.

○ Correct　　× Incorrect

- Service and maintenance should be perform regularly as schedule, and confirm the normal operation of following:
  1.Is the compressed air supplied stably?
  2.Is the front filter and strainer normal?
  3.Is the connection portion or piping loosen accompany moving of object? Is the pipe connection portion normal?
  4.Is the action condition of the cylinder normal ? Is there any delay phenomena and exhaust normal? Any strange noise?
  5.Whether the piping system connected to solenoid valve (governor) normal ? Terminal start and stop movement normal? Is the load system normal?
  6.Is the lubricant feeding system normal? Is the oil amount adjusted properly?

Cylinder

# ISO15552、VDMA24562 Cylinder

## Specification:

| Type | 32 | 40 | 50 | 63 | 80 | 100 | 125 |
|---|---|---|---|---|---|---|---|
| Motion | Double acting | | | | | | |
| Series | DNC,DNCD,DNCJ | | | | | | |
| Fluid | Compressed air | | | | | | |
| Working pressure range (MPa) | 0.1~1 | | | | | | |
| Operating speed(mm/sec) | 50~500 | | | | | | |
| Ambient temperature(℃) | -10~70 | | | | | | |
| Cushion | Adjustable cushion at both ends | | | | | | |
| Port size (G) | 1/8" | 1/4" | | 3/8" | | 1/2" | |

## How to order:

**DNC 50 x 100 FA S**

Specification

| |
|---|
| DNC: Standard Cylinder |
| DNCD: Double axial Cylinder |
| DNCJ: Stroke adjustable Cylinder |

Bore

| | |
|---|---|
| Φ32 | Φ80 |
| Φ40 | Φ100 |
| Φ50 | Φ125 |
| Φ63 | |

Stroke

Mounting type

| |
|---|
| Blank(Standard) |
| FA |
| FB |
| CA |
| CB |
| LB |
| TC |

Magnet code

| |
|---|
| S1:with magnet + 1pc magnet switch |
| S2:with magnet + 2pc magnet switch |
| S3:heat resisting seal ring, max temp.150℃ |
| S4:acid resisting piston rod |

## Symbol:

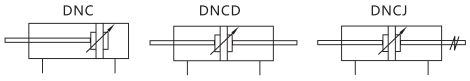

DNC

## Product feature:

1.The front and rear covers are finished by aluminum die-casting and CNC mechanically processed, with high precision and international standard quality.
2.With aluminum tube used, it’s friction and corrosion resistant and stainless forever.
3.Adopt imported non oil feeding and seal to have long time sevice and no lubricating maintenance.
4.Unique cushion design makes the machines work more smoothly.
5.Sensor equipment can be added to make the electrical wiring and control easily.
6.With no pull rod and good corrosion resistance.

## Inner structure drawing:

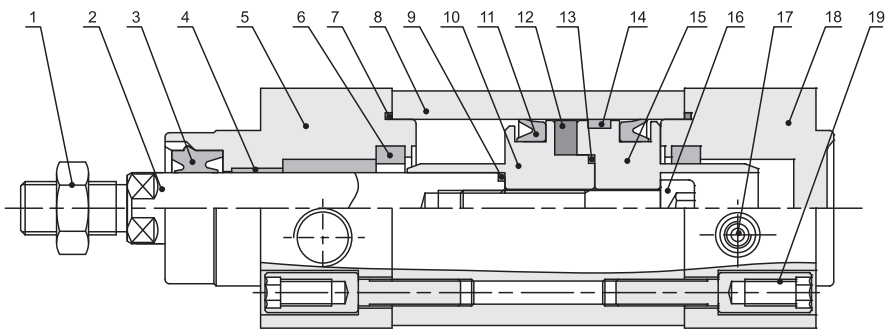


| Number | Name | Number | Name |
|---|---|---|---|
| 1 | Hexagonal nut | 11 | Y-ring |
| 2 | Piston rod | 12 | Magnet |
| 3 | EU Dustproof sealing ring | 13 | O-ring |
| 4 | Composite bearing | 14 | Wearing ring |
| 5 | Front cover | 15 | Piston |
| 6 | Buffer sealing ring | 16 | Hexagon socket cap screws |
| 7 | D-ring | 17 | Buffer adjusting screw |
| 8 | Cylinder barrel | 18 | Rear cover |
| 9 | O-ring | 19 | End cover screw |
| 10 | Piston-magnet seat | | |

# ISO15552、VDMA24562 Cylinder

## Dimension(mm):

### DNC Series

Φ32~Φ125

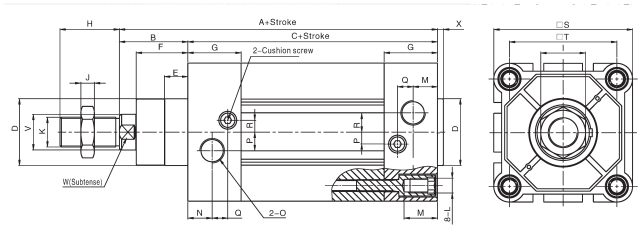


| Bore/Symbol | A | B | C | D | E | F | G | H | I | J | K | L |
|---|---|---|---|---|---|---|---|---|---|---|---|---|
| 32 | 120 | 26 | 94 | 30 | 10 | 18 | 25 | 22 | 17 | 6 | M10×1.25 | M6 |
| 40 | 135 | 30 | 105 | 35 | 10 | 21.5 | 30 | 24 | 17 | 7 | M12×1.25 | M6 |
| 50 | 143 | 37 | 106 | 40 | 12 | 28 | 29.5 | 32 | 23 | 8 | M16×1.5 | M8 |
| 63 | 158 | 37 | 121 | 45 | 12 | 28.5 | 35.5 | 32 | 23 | 8 | M16×1.5 | M8 |
| 80 | 174 | 46 | 128 | 45 | 16 | 34.5 | 36 | 40 | 26 | 10 | M20×1.5 | M10 |
| 100 | 189 | 51 | 138 | 55 | 16 | 38 | 40 | 40 | 26 | 10 | M20×1.5 | M10 |
| 125 | 225 | 65 | 160 | 60 | 20 | 46 | 45.5 | 54 | 41 | 11 | M27×2 | M12 |

| Bore/Symbol | M | N | O | P | Q | R | S | T | V | W | X |
|---|---|---|---|---|---|---|---|---|---|---|---|
| 32 | 16 | 14 | G1/8" | 6 | 3 | 5 | 45 | 32.5 | 12 | 10 | 4 |
| 40 | 16 | 14 | G1/4" | 6 | 3 | 6 | 54 | 38 | 16 | 13 | 4 |
| 50 | 17 | 14 | G1/4" | 9 | 5 | 8 | 65 | 46.5 | 20 | 17 | 4 |
| 63 | 17 | 17 | G3/8" | 11 | 6 | 10 | 74 | 56.5 | 20 | 17 | 4 |
| 80 | 17 | 17 | G3/8" | 12 | 10 | 10 | 93 | 72 | 25 | 22 | 4 |
| 100 | 17 | 19 | G1/2" | 12 | 10 | 10 | 110 | 89 | 25 | 22 | 4 |
| 125 | 22 | 19 | G1/2" | 13 | 14 | 10 | 135 | 110 | 32 | 27 | 6 |

### CA–Single–ear mounting type

Φ32~Φ125

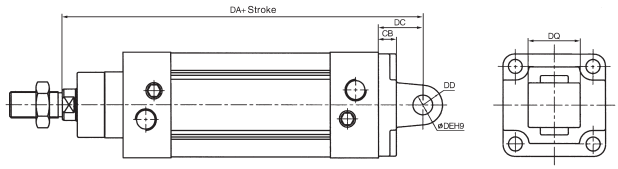


| Bore/Symbol | DA | DC | CB | DD | ΦDE | DQ |
|---|---|---|---|---|---|---|
| 32 | 142 | 22 | 9 | 10 | 10 | 26 |
| 40 | 160 | 25 | 9 | 12 | 12 | 28 |
| 50 | 170 | 27 | 11 | 12 | 12 | 32 |
| 63 | 190 | 32 | 11 | 16 | 16 | 40 |
| 80 | 210 | 36 | 14 | 16 | 16 | 50 |
| 100 | 230 | 41 | 14 | 20 | 20 | 60 |
| 125 | 275 | 50 | 20 | 30 | 25 | 70 |

### CB–Double–ear mounting type

Φ32~Φ125

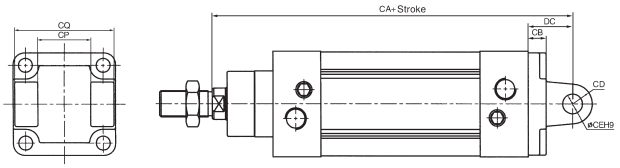


| Bore/Symbol | CA | CC | CB | CD | ΦCE | CP | CQ |
|---|---|---|---|---|---|---|---|
| 32 | 142 | 22 | 9 | 10 | 10 | 26 | 44.5 |
| 40 | 160 | 25 | 9 | 12 | 12 | 28 | 51.5 |
| 50 | 170 | 27 | 11 | 12 | 12 | 32 | 60 |
| 63 | 190 | 32 | 11 | 16 | 16 | 40 | 70 |
| 80 | 210 | 36 | 14 | 16 | 16 | 50 | 90 |
| 100 | 230 | 41 | 14 | 20 | 20 | 60 | 106 |
| 125 | 275 | 50 | 20 | 30 | 25 | 70 | 130 |

### LB–Foot bracket mounting type

Φ32~Φ125

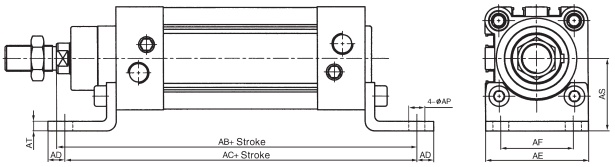


| Bore/Symbol | AB | AC | AD | AE | AF | AP | AS | AT |
|---|---|---|---|---|---|---|---|---|
| 32 | 144 | 142 | 6.5 | 45 | 32 | 7 | 32 | 5 |
| 40 | 163 | 161 | 9 | 54 | 36 | 10 | 36 | 5 |
| 50 | 175 | 170 | 10.5 | 64 | 45 | 10 | 45 | 6 |
| 63 | 190 | 185 | 12.5 | 75 | 50 | 10 | 50 | 6 |
| 80 | 215 | 210 | 15 | 93 | 63 | 12 | 63 | 6 |
| 100 | 230 | 220 | 17.5 | 110 | 75 | 14.5 | 71 | 6 |
| 125 | 270 | 250 | 22 | 131 | 90 | 16.5 | 90 | 8 |

### FA、FB–Front&rear flange mounting type

Φ32~Φ125

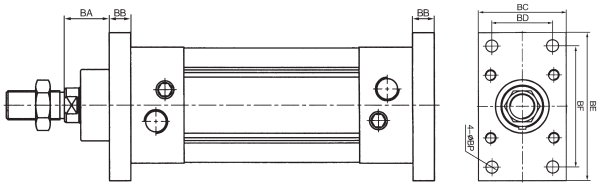


| Bore/Symbol | BA | BB | BC | BD | BE | BF | BP |
|---|---|---|---|---|---|---|---|
| 32 | 16 | 10 | 50 | 32 | 80 | 64 | 7 |
| 40 | 20 | 10 | 55 | 36 | 90 | 72 | 9 |
| 50 | 25 | 12 | 65 | 45 | 110 | 90 | 9 |
| 63 | 25 | 12 | 75 | 50 | 125 | 100 | 9 |
| 80 | 30 | 16 | 100 | 63 | 154 | 126 | 12 |
| 100 | 35 | 16 | 120 | 75 | 186 | 150 | 14 |
| 125 | 45 | 20 | 150 | 90 | 220 | 180 | 16 |

# ISO15552、VDMA24562 Cylinder

## Specification:

| Type | 32 | 40 | 50 | 63 | 80 | 100 | 125 | 160 | 200 |
|---|---|---|---|---|---|---|---|---|---|
| Motion | Double acting | | | | | | | | |
| Series | DNG, DI, DNGD, DNGJ | | | | | | | | |
| Fluid | Compressed air | | | | | | | | |
| Working pressure range (MPa) | 0.1~1 | | | | | | | | |
| Operating speed(mm/sec) | 50~500 | | | | | | | | |
| Ambient temperature(℃) | -10~70 | | | | | | | | |
| Cushion | Adjustable cushion at both ends | | | | | | | | |
| Port size (G) | 1/8" | 1/4" | | 3/8" | | 1/2" | | | |

## How to order:

**DNG 50 × 100 FA S**

Specification

| |
|---|
| DNG: Standard Cylinder |
| DI Tie-rod hidden Cylinder |
| DNGD: Double axial Cylinder |
| DNGJ: Stroke adjustable Cylinder |

Bore

| | |
|---|---|
| Φ32 | Φ100 |
| Φ40 | Φ125 |
| Φ50 | Φ160 |
| Φ63 | Φ200 |
| Φ80 | |

Stroke

Magnet code

| |
|---|
| S1:with magnet + 1pc magnet switch |
| S2:with magnet + 2pc magnet switch |
| S3:heat resisting seal ring, max temp.150℃ |
| S4:acid resisting piston rod |

Mounting type

| |
|---|
| Blank(Standard) |
| FA |
| FB |
| CA |
| CB |
| LB |
| TC |

## Symbol:

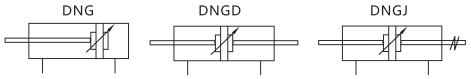

DNG

## Product feature:

1. Front and rear caps are finished by aluminum die–casting,CNC mechanically processed with high precision.
2. Aluminum tube is imported, stainless forever with friction& corrosion resistance.
3. Adopt imported none lubrication, long time service and no need lubrication maintenance.
4. Unique cushion technique makes smooth action.
5. May add the sensor equipment to easily control.
6. In terms of DI series,pull–rod is hidden inside.

## Inner structure drawing:

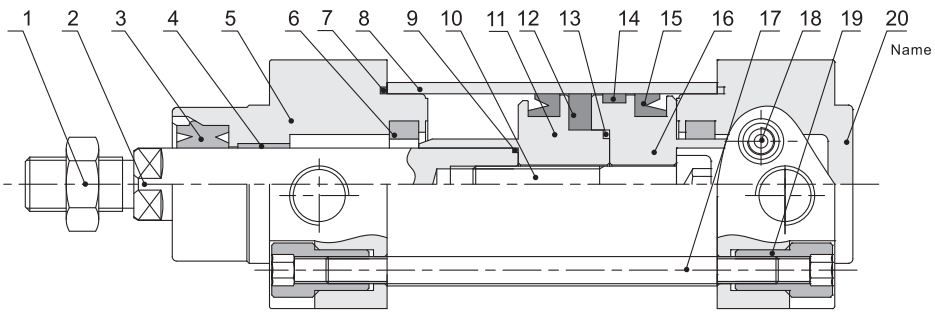


| Number | Name | Number | Name |
|---|---|---|---|
| 1 | Hexagonal nut | 11 | Piston-magnet seat |
| 2 | Piston rod | 12 | Magnet |
| 3 | EU Dustproof sealing ring | 13 | O-ring |
| 4 | Composite bearing | 14 | Wearing ring |
| 5 | Front cover | 15 | Y-ring |
| 6 | Buffer sealing ring | 16 | Piston |
| 7 | D-ring | 17 | Pull rod |
| 8 | Cylinder barrel | 18 | Buffer adjusting screw |
| 9 | O-ring | 19 | Pull rod screw rod |
| 10 | Hexagon socket cap screws | 20 | Rear cover |

# ISO15552、VDMA24562 Cylinder

## Dimension(mm):

### DNG Series

Φ32~Φ200

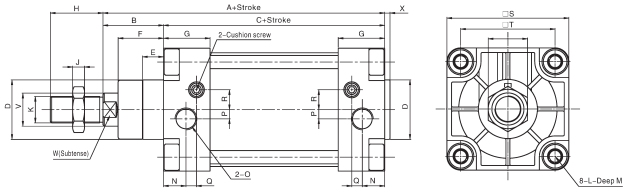


| Bore/Symbol | A | B | C | D | E | F | G | H | I | I | K | L |
|---|---|---|---|---|---|---|---|---|---|---|---|---|
| 32 | 120 | 26 | 94 | 30 | 10 | 19 | 26 | 22 | 17 | 6 | M10×1.25 | M6 |
| 40 | 135 | 30 | 105 | 35 | 10 | 21.5 | 26 | 24 | 17 | 7 | M12×1.25 | M6 |
| 50 | 142 | 37 | 104 | 40 | 12 | 28.5 | 29 | 32 | 23 | 8 | M16×1.5 | M8 |
| 63 | 158 | 37 | 121 | 45 | 12 | 28.5 | 35.5 | 32 | 23 | 8 | M16×1.5 | M8 |
| 80 | 174 | 46 | 128 | 45 | 16 | 34.5 | 35.5 | 40 | 26 | 10 | M20×1.5 | M10 |
| 100 | 189 | 51 | 138 | 55 | 16 | 37.5 | 38.5 | 40 | 26 | 10 | M20×1.5 | M10 |
| 125 | 225 | 65 | 160 | 60 | 20 | 44.5 | 46.5 | 54 | 41 | 11 | M27×2 | M12 |
| 160 | 260 | 80 | 180 | 65 | 20 | 48 | 50 | 72 | 55 | 13 | M36x2 | M16 |
| 200 | 275 | 95 | 180 | 75 | 20 | 65 | 50 | 72 | 55 | 13 | M36x2 | M16 |

| Bore/Symbol | M | N | O | P | Q | R | S | T | V | W | X |
|---|---|---|---|---|---|---|---|---|---|---|---|
| 32 | 12 | 9 | G1/8" | 2 | 7 | 7 | 50 | 32.5 | 12 | 10 | 4 |
| 40 | 12 | 11 | G1/4" | 2 | 5 | 9 | 55 | 38 | 16 | 13 | 4 |
| 50 | 18 | 17 | G1/4" | 5 | 2 | 11 | 65 | 46.5 | 20 | 17 | 4 |
| 63 | 18 | 18 | G3/8" | 6 | 5 | 14 | 75 | 56.5 | 20 | 17 | 4 |
| 80 | 19 | 18 | G3/8" | 7 | 8 | 15 | 93 | 72 | 25 | 22 | 4 |
| 100 | 19 | 18 | G1/2" | 8 | 11 | 14 | 110 | 89 | 25 | 22 | 4 |
| 125 | 25 | 18 | G1/2" | 8 | 14 | 13 | 138 | 110 | 32 | 27 | 6 |
| 160 | 30 | 24 | G3/4" | 12 | 14 | 22 | 180 | 140 | 40 | 36 | 6 |
| 200 | 25 | 25 | G3/4" | 16 | 14 | 20 | 230 | 175 | 40 | 36 | 6 |

### DI Series

Φ32~Φ160

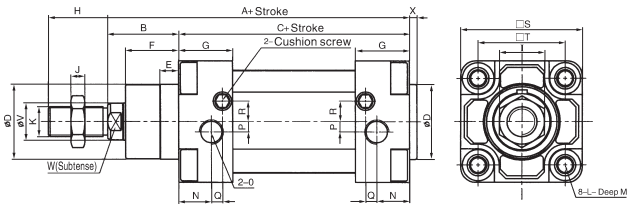


| Bore/Symbol | A | B | C | D | E | F | G | H | I | I | K | L |
|---|---|---|---|---|---|---|---|---|---|---|---|---|
| 32 | 20 | 26 | 94 | 30 | 10 | 19 | 26 | 22 | 17 | 6 | M10×1.25 | M6 |
| 40 | 135 | 30 | 105 | 35 | 10 | 21.5 | 26 | 24 | 17 | 7 | M12×1.25 | M6 |
| 50 | 142 | 38 | 104 | 40 | 12 | 28.5 | 29 | 32 | 23 | 8 | M16×1.5 | M6 |
| 63 | 158 | 37 | 121 | 45 | 12 | 28.5 | 35.5 | 32 | 23 | 8 | M16×1.5 | M8 |
| 80 | 174 | 46 | 128 | 45 | 16 | 34.5 | 35.5 | 40 | 26 | 10 | M20×1.5 | M10 |
| 100 | 189 | 51 | 138 | 55 | 16 | 37.5 | 38.5 | 40 | 26 | 10 | M20×1.5 | M10 |
| 125 | 225 | 65 | 160 | 60 | 20 | 44.5 | 46.5 | 54 | 38 | 11 | M27×2 | M12 |
| 160 | 260 | 80 | 160 | 65 | 20 | 48 | 50 | 72 | 50 | 13 | M36x2 | M16 |

| Bore/Symbol | M | N | O | P | Q | R | S | T | V | W | X |
|---|---|---|---|---|---|---|---|---|---|---|---|
| 32 | 16 | 9 | G1/8" | 2 | 7 | 7 | 50 | 32.5 | 12 | 10 | 4 |
| 40 | 16 | 11 | G1/4" | 2 | 5 | 9 | 55 | 38 | 16 | 13 | 4 |
| 50 | 20 | 17 | G1/4" | 5 | 2 | 11 | 65 | 46.5 | 20 | 17 | 4 |
| 63 | 20 | 18 | G3/8" | 6 | 5 | 14 | 75 | 56.5 | 20 | 17 | 4 |
| 80 | 25 | 18 | G3/8" | 7 | 8 | 15 | 93 | 72 | 25 | 22 | 4 |
| 100 | 28 | 18 | G1/2" | 8 | 11 | 14 | 110 | 89 | 25 | 22 | 4 |
| 125 | 30 | 18 | G1/2" | 8 | 14 | 13 | 138 | 110 | 32 | 27 | 6 |
| 160 | 35 | 24 | G3/4" | 12 | 14 | 22 | 180 | 140 | 40 | 36 | 6 |

### CA–Single–ear mounting type

Φ32~Φ160

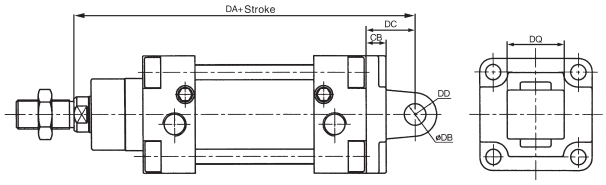


### CB–Double–ear mounting type

Φ32~Φ160

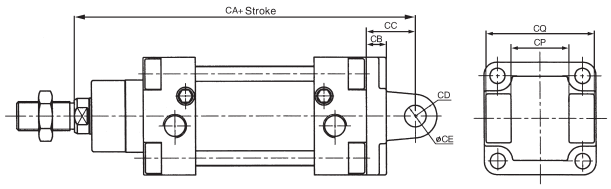


| Bore/Symbol | DA | DC | CB | DD | ΦDE | DQ | CA | CC | CB | CD | ΦCE | CP | CQ |
|---|---|---|---|---|---|---|---|---|---|---|---|---|---|
| 32 | 142 | 22 | 9 | 10 | 10 | 26 | 142 | 22 | 9 | 10 | 10 | 26 | 44.5 |
| 40 | 160 | 25 | 9 | 12 | 12 | 28 | 160 | 25 | 9 | 12 | 12 | 28 | 51.5 |
| 50 | 169 | 27 | 11 | 12 | 12 | 32 | 169 | 27 | 11 | 12 | 12 | 32 | 60 |
| 63 | 190 | 32 | 11 | 16 | 16 | 40 | 190 | 32 | 11 | 16 | 16 | 40 | 70 |
| 80 | 210 | 36 | 14 | 16 | 16 | 50 | 210 | 36 | 14 | 16 | 16 | 50 | 90 |
| 100 | 230 | 41 | 14 | 20 | 20 | 60 | 230 | 41 | 14 | 20 | 20 | 60 | 110 |
| 125 | 275 | 50 | 20 | 25 | 25 | 70 | 275 | 50 | 20 | 25 | 25 | 70 | 130 |
| 160 | 315 | 55 | 20 | 25 | 30 | 90 | 315 | 55 | 20 | 25 | 30 | 90 | 175 |

### LB–Foot bracket mounting type

Φ32~Φ160

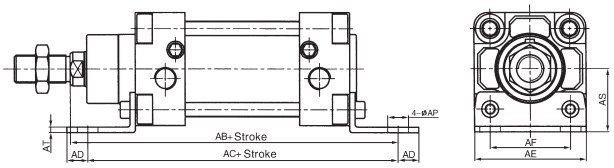


### FA、FB–Front&rear flange mounting type

Φ32~Φ160

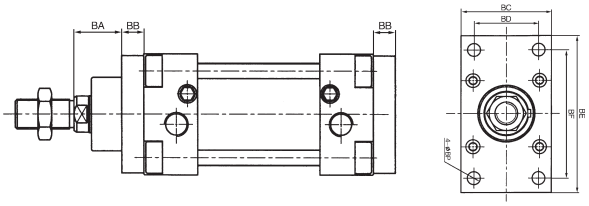

| Bore/Symbol | AB | AC | AD | AE | AF | AP | AS | AT | BA | BB | BC | BD | BE | BF | BP |
|---|---|---|---|---|---|---|---|---|---|---|---|---|---|---|---|
| 32 | 144 | 142 | 8 | 48 | 32 | 7 | 32 | 5 | 16 | 10 | 50 | 32 | 80 | 64 | 7 |
| 40 | 163 | 161 | 12 | 53 | 36 | 10 | 36 | 5 | 20 | 10 | 55 | 36 | 90 | 72 | 9 |
| 50 | 175 | 170 | 13 | 63 | 45 | 10 | 45 | 6 | 26 | 12 | 65 | 45 | 110 | 90 | 9 |
| 63 | 190 | 185 | 13 | 73 | 50 | 10 | 50 | 6 | 25 | 12 | 75 | 50 | 125 | 100 | 9 |
| 80 | 215 | 210 | 19 | 93 | 63 | 12 | 63 | 6 | 30 | 16 | 93 | 63 | 154 | 126 | 12 |
| 100 | 230 | 220 | 19 | 110 | 75 | 14.5 | 71 | 6 | 35 | 16 | 110 | 75 | 186 | 150 | 14 |
| 125 | 270 | 250 | 20 | 138 | 90 | 16.5 | 90 | 8 | 45 | 20 | 138 | 90 | 220 | 180 | 16 |
| 160 | 320 | 300 | 15 | 184 | 115 | 18.5 | 115 | 9 | 60 | 20 | 180 | 115 | 280 | 230 | 18 |

# ISO15552、VDMA24562 Cylinder

## Specification:

| Type | 32 | 40 | 50 | 63 | 80 | 100 |
|---|---|---|---|---|---|---|
| Motion | Double acting | | | | | |
| Series | SI, SID, SIJ | | | | | |
| Fluid | Compressed air | | | | | |
| Working pressure range (MPa) | 0.1~1 | | | | | |
| Operating speed(mm/sec) | 50~500 | | | | | |
| Ambient temperature(℃) | -10~70 | | | | | |
| Cushion | Adjustable cushion at both ends | | | | | |
| Port size (G) | 1/8" | 1/4" | | | 3/8" | |

## How to order:

**SI 50 × 100 FA S**

- Specification
  - SI: Standard Cylinder
  - SID: Double axial Cylinder
  - SIJ: Storke adjustable Cylinder
- Bore

| | |
|---|---|
| Φ32 | Φ63 |
| Φ40 | Φ80 |
| Φ50 | Φ100 |

- Stroke
- Mounting type
  - Blank(Standard)
  - FA
  - FB
  - CA
  - CB
  - LB
  - TC
- Magnet code
  - S1:with magnet + 1pc magnet switch
  - S2:with magnet + 2pc magnet switch
  - S3:heat resisting seal ring, max temp.150℃
  - S4:acid resisting piston rod

## Symbol:

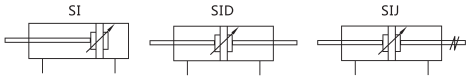


## Product feature:

1. The front and rear covers are finished by aluminum die-casting and CNC mechanically processed, with high precision and international standard quality.
2. With aluminum tube used, it's friction and corrosion resistant and stainless forever.
3. Adopt imported non oil feeding and seal to have long time sevice and no lubricating maintenance.
4. Unique cushion design makes the machines work more smoothly.
5. Sensor equipment can be added to make the electrical wiring and control easily.
6. The cylinder barrel is M type with no pull rod and good corrosion resistance

## Inner structure drawing:

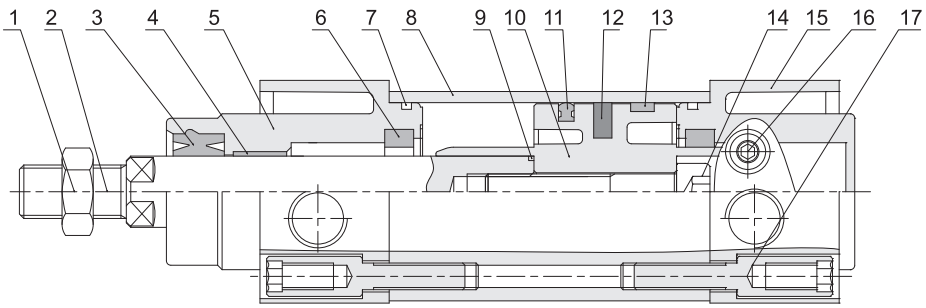


| Number | Name | Number | Name |
|---|---|---|---|
| 1 | Hexagonal nut | 10 | Piston |
| 2 | Piston rod | 11 | C-ring |
| 3 | EU Dustproof sealing ring | 12 | Magnet |
| 4 | Composite bearing | 13 | Wearing ring |
| 5 | Front cover | 14 | Hexagon socket cap screws |
| 6 | Buffer sealing ring | 15 | Rear cover |
| 7 | O-ring | 16 | Buffer adjusting screw |
| 8 | Cylinder barrel | 17 | End cover screw |
| 9 | O-ring | | |

# ISO15552、VDMA24562 Cylinder

## Dimension(mm):

### SI Series

■ Φ32~Φ100

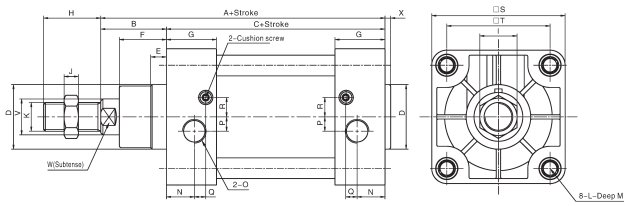


| Bore/Symbol | A | B | C | D | E | F | G | H | I | J | K | L |
|---|---|---|---|---|---|---|---|---|---|---|---|---|
| 32 | 120 | 26 | 94 | 30 | 10 | 18 | 27.5 | 22 | 17 | 6 | M10×1.25 | M6 |
| 40 | 135 | 30 | 105 | 35 | 10 | 21.5 | 32 | 24 | 17 | 7 | M12×1.25 | M6 |
| 50 | 143 | 37 | 106 | 40 | 12 | 28 | 31 | 32 | 23 | 8 | M16×1.5 | M8 |
| 63 | 158 | 37 | 121 | 45 | 12 | 28.5 | 33 | 32 | 23 | 8 | M16×1.5 | M8 |
| 80 | 174 | 46 | 128 | 45 | 16 | 34.5 | 33 | 40 | 26 | 10 | M20×1.5 | M10 |
| 100 | 189 | 51 | 138 | 55 | 16 | 38 | 37 | 40 | 26 | 10 | M20×1.5 | M10 |

| Bore/Symbol | M | N | O | P | Q | R | S | T | V | W | X |
|---|---|---|---|---|---|---|---|---|---|---|---|
| 32 | 13 | 13 | G1/8" | 5.5 | 6 | 6 | 47 | 32.5 | 12 | 10 | 4 |
| 40 | 17 | 17 | G1/4" | 6 | 7.5 | 8.5 | 53 | 38 | 16 | 13 | 4 |
| 50 | 15.5 | 15.5 | G1/4" | 7.5 | 6.5 | 9.5 | 65 | 46.5 | 20 | 17 | 4 |
| 63 | 16.5 | 16.5 | G3/8" | 7.5 | 7.5 | 11.5 | 75 | 56.5 | 20 | 17 | 4 |
| 80 | 16.5 | 16.5 | G3/8" | 9 | 7.5 | 13.5 | 95 | 72 | 25 | 22 | 4 |
| 100 | 18.5 | 18.5 | G1/2" | 9.5 | 8.5 | 13.5 | 115 | 89 | 25 | 22 | 4 |

### CA–Single–ear mounting type

■ Φ32~Φ100

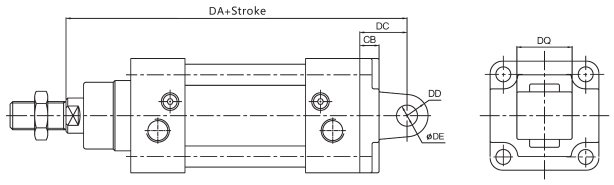


| Bore/Symbol | DA | DC | CB | DD | ΦDE | DQ |
|---|---|---|---|---|---|---|
| 32 | 142 | 22 | 9 | 10 | 10 | 26 |
| 40 | 160 | 25 | 9 | 12 | 12 | 28 |
| 50 | 170 | 27 | 11 | 12 | 12 | 32 |
| 63 | 190 | 32 | 11 | 16 | 16 | 40 |
| 80 | 200 | 36 | 14 | 16 | 16 | 50 |
| 100 | 230 | 41 | 14 | 20 | 20 | 60 |

### CB–Double–ear mounting type

■ Φ32~Φ100

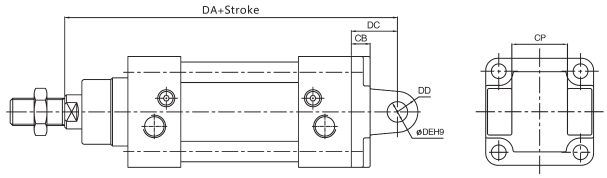


| Bore/Symbol | DA | DC | DB | DD | ΦDE | CP |
|---|---|---|---|---|---|---|
| 32 | 142 | 22 | 9 | 10 | 10 | 26 |
| 40 | 160 | 25 | 9 | 12 | 12 | 28 |
| 50 | 170 | 27 | 11 | 12 | 12 | 32 |
| 63 | 190 | 32 | 11 | 16 | 16 | 40 |
| 80 | 200 | 36 | 14 | 16 | 16 | 50 |
| 100 | 230 | 41 | 14 | 20 | 20 | 60 |

### LB–Foot bracket mounting type

■ Φ32~Φ160

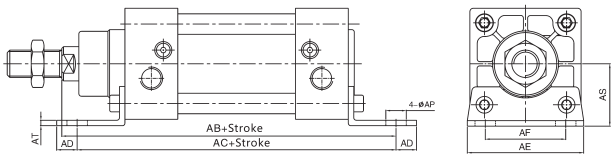


| Bore/Symbol | AB | AC | AD | AE | AF | AP | AS | AT |
|---|---|---|---|---|---|---|---|---|
| 32 | 160 | 142 | 8 | 47 | 32 | 7 | 32 | 3 |
| 40 | 182 | 161 | 9 | 53 | 36 | 9 | 36 | 3 |
| 50 | 197 | 170 | 10 | 65 | 45 | 9 | 45 | 3 |
| 63 | 210 | 185 | 12 | 75 | 50 | 9 | 50 | 3 |
| 80 | 227 | 210 | 19 | 95 | 63 | 12.5 | 63 | 4 |
| 100 | 260 | 228 | 19 | 115 | 75 | 14.5 | 71 | 4 |

### FA、FB–Front&rear flange mounting type

■ Φ32~Φ160

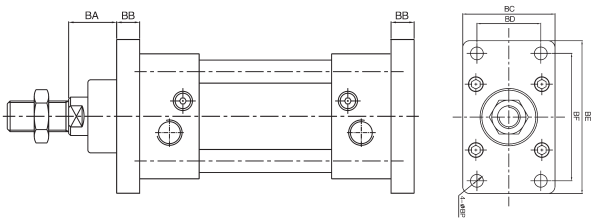


| Bore/Symbol | BA | BB | BC | BD | BE | BF | BP |
|---|---|---|---|---|---|---|---|
| 32 | 16 | 10 | 47 | 32 | 80 | 64 | 7 |
| 40 | 20 | 10 | 53 | 36 | 90 | 72 | 9 |
| 50 | 25 | 12 | 65 | 45 | 108 | 90 | 9 |
| 63 | 25 | 12 | 75 | 50 | 118 | 100 | 9 |
| 80 | 30 | 16 | 95 | 63 | 150 | 126 | 12.5 |
| 100 | 40 | 16 | 115 | 75 | 176 | 150 | 14.5 |

# Standard Cylinder

## Specification:

| Type | 32 | 40 | 50 | 63 | 80 | 100 | 125 | 160 | 200 |
|---|---|---|---|---|---|---|---|---|---|
| Motion | Double acting | | | | | | | | |
| Series | SC, SCD, SCJ, SU | | | | | | | | |
| Fluid | Compressed air | | | | | | | | |
| Working pressure range (MPa) | 0.1~1 | | | | | | | | |
| Operating speed(mm/sec) | 50~500 | | | | | | | | |
| Ambient temperature(℃) | -10~70 | | | | | | | | |
| Cushion | Adjustable cushion at both ends | | | | | | | | |
| Port size (G) | 1/8" | 1/4" | | 3/8" | | 1/2" | | | |

## Symbol:

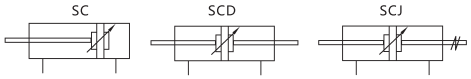


## How to order:

**SC 50 × 100 FA S**

Specification

| |
|---|
| SC: Standard Cylinder |
| SCD: Double axial Cylinder |
| SCJ: Stroke adjustable Cylinder |
| SU: Tie-rod hidden Cylinder |

Bore

| | |
|---|---|
| Φ32 | Φ100 |
| Φ40 | Φ125 |
| Φ50 | Φ160 |
| Φ63 | Φ200 |
| Φ80 | |

Stroke

Magnet code

| |
|---|
| S1:with magnet + 1pc magnet switch |
| S2:with magnet + 2pc magnet switch |
| S3:heat resisting seal ring, max temp.150℃ |
| S4:acid resisting piston rod |

| | |
|---|---|
| Blank(Standard) | |
| FA | |
| FB | |
| CA | |
| CB | |
| LB | |
| TC | |

SC

## Product feature:

1. Front and rear caps are finished by aluminum die-casting,CNC mechanically processed with high precision.
2. Aluminum tube is imported, stainless forever with friction& corrosion resistance.
3. Adopt imported none lubrication, long time service and no need lubrication maintenance.
4. Unique cushion technique makes smooth action.
5. May add the sensor equipment to easily control.
6. In terms of SU series,pull-rod is hidden inside.

## Inner structure drawing:

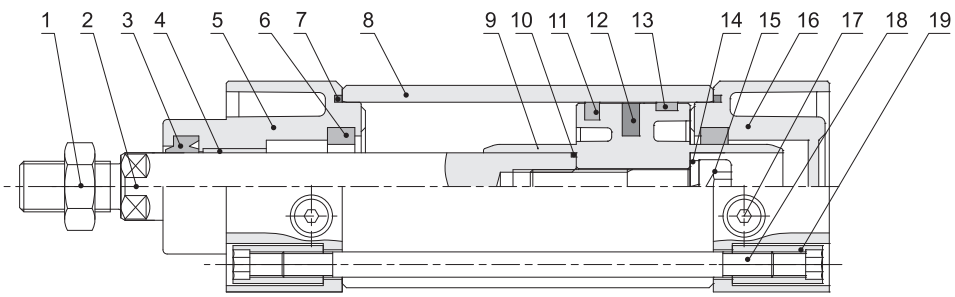


| Number | Name | Number | Name |
|---|---|---|---|
| 1 | Hexagonal nut | 11 | C-ring |
| 2 | Piston rod | 12 | Magnet |
| 3 | Dustproof sealing ring | 13 | Wearing ring |
| 4 | Composite bearing | 14 | Spring washer |
| 5 | Front cover | 15 | Hexagon socket cap screws |
| 6 | Buffer sealing ring | 16 | Rear cover |
| 7 | D-ring | 17 | Buffer adjusting screw |
| 8 | Cylinder barrel | 18 | Pull rod |
| 9 | Piston | 19 | Pull rod nut |
| 10 | O-ring | | |

# Standard Cylinder

## Dimension(mm):

### Standard Dimension

Φ32~Φ200

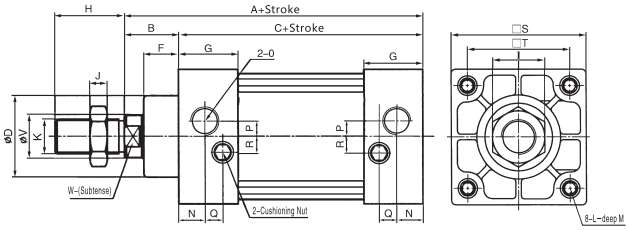


| Bore/Symbol | A | B | C | D | F | G | H | I | J | K | L |
|---|---|---|---|---|---|---|---|---|---|---|---|
| 32 | 118 | 25 | 93 | 28 | 15 | 27.5 | 22 | 17 | 6 | M10×1.25 | M6 |
| 40 | 118 | 25 | 93 | 32 | 15 | 27.5 | 24 | 17 | 7 | M12×1.25 | M6 |
| 50 | 118 | 25 | 93 | 38 | 16 | 27.5 | 32 | 23 | 8 | M16×1.5 | M6 |
| 63 | 121 | 26 | 95 | 38 | 16 | 27.5 | 32 | 23 | 8 | M16×1.5 | M8 |
| 80 | 143.5 | 36.5 | 107 | 43 | 21 | 33 | 40 | 26 | 10 | M20×1.5 | M10 |
| 100 | 148 | 35 | 113 | 43 | 21 | 33 | 40 | 26 | 10 | M20×1.5 | M10 |
| 125 | 171 | 47 | 124 | 56 | 32 | 32 | 45 | 41 | 11 | M27×2 | M12 |
| 160 | 195 | 50 | 145 | 64 | 32 | 40 | 50 | 55 | 13 | M36×2 | M16 |
| 200 | 201 | 54 | 147 | 66 | 35 | 41 | 60 | 55 | 13 | M36×2 | M16 |

| Bore/Symbol | M | N | O | P | Q | R | S | T | V | W |
|---|---|---|---|---|---|---|---|---|---|---|
| 32 | 13 | 12 | G1/8" | 6 | 8 | 6 | 45.5 | 33 | 12 | 10 |
| 40 | 13 | 12 | G1/4" | 6 | 8 | 7 | 50 | 37 | 16 | 13 |
| 50 | 13 | 12 | G1/4" | 7 | 8 | 8 | 62 | 47 | 20 | 17 |
| 63 | 13 | 14 | G3/8" | 7 | 8 | 8 | 75 | 56 | 20 | 17 |
| 80 | 14 | 16 | G3/8" | 10 | 10 | 14 | 94 | 70 | 25 | 22 |
| 100 | 16 | 16 | G1/2" | 10 | 10 | 11 | 112 | 84 | 25 | 22 |
| 125 | 15 | 17 | G1/2" | 11 | 6 | 11 | 140 | 110 | 32 | 27 |
| 160 | 18 | 24 | G1/2" | 11 | 5 | 12 | 178 | 140 | 40 | 36 |
| 200 | 18 | 24 | G1/2" | 12 | 6 | 11 | 220 | 175 | 40 | 36 |

### FA、FB Dimension

Φ32~Φ200

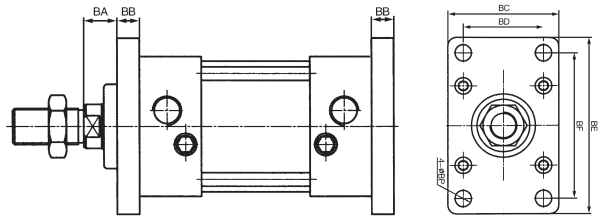


| Bore/Symbol | BA | BB | BC | BD | BE | BF | BP |
|---|---|---|---|---|---|---|---|
| 32 | 15 | 10 | 47 | 33 | 80 | 58 | 7 |
| 40 | 15 | 10 | 53 | 36 | 90 | 70 | 7 |
| 50 | 15 | 10 | 65 | 47 | 104 | 86 | 9 |
| 63 | 14 | 12 | 75 | 56 | 118 | 98 | 9 |
| 80 | 19 | 16 | 95 | 70 | 140 | 119 | 11 |
| 100 | 19 | 16 | 115 | 84 | 160 | 138 | 11 |
| 125 | 27 | 20 | 139 | 90 | 218 | 180 | 16.5 |
| 160 | 30 | 20 | 180 | 115 | 280 | 230 | 18.5 |
| 200 | 29 | 25 | 220 | 135 | 320 | 270 | 22 |

### CA Dimension

Φ32~Φ200

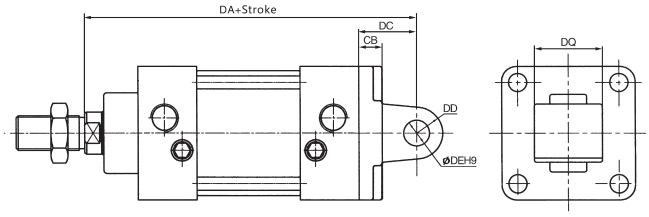


| Bore/Symbol | DA | DC | CB | DD | ΦDE | DQ |
|---|---|---|---|---|---|---|
| 32 | 152 | 34 | 9 | 10.5 | 12 | 16 |
| 40 | 152 | 34 | 9 | 11.5 | 14 | 20 |
| 50 | 152 | 34 | 10 | 12 | 14 | 20 |
| 63 | 155 | 34 | 10 | 12.5 | 14 | 20 |
| 80 | 191.5 | 48 | 14 | 16.5 | 20 | 32 |
| 100 | 196 | 48 | 14 | 17 | 20 | 32 |
| 125 | 221 | 50 | 15 | 22 | 25 | 70 |
| 160 | 250 | 55 | 20 | 30 | 30 | 90 |
| 200 | 261 | 60 | 25 | 30 | 30 | 90 |

### CB Dimension

Φ32~Φ200

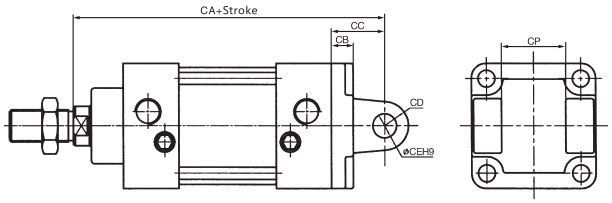


| Bore/Symbol | CA | CC | CB | CD | ΦCE | CP |
|---|---|---|---|---|---|---|
| 32 | 137 | 19 | 9 | 10.5 | 12 | 16 |
| 40 | 137 | 19 | 9 | 11.5 | 14 | 20 |
| 50 | 137 | 19 | 10 | 12 | 14 | 20 |
| 63 | 140 | 19 | 10 | 12.5 | 14 | 20 |
| 80 | 175.5 | 32 | 14 | 16.5 | 20 | 32 |
| 100 | 180 | 32 | 14 | 17 | 20 | 32 |
| 125 | 221 | 50 | 15 | 25 | 25 | 70 |
| 160 | 250 | 55 | 20 | 30 | 30 | 90 |
| 200 | 261 | 60 | 25 | 30 | 30 | 90 |

# Standard Cylinder

## Dimension(mm):

### LB Dimension

Φ32~Φ200

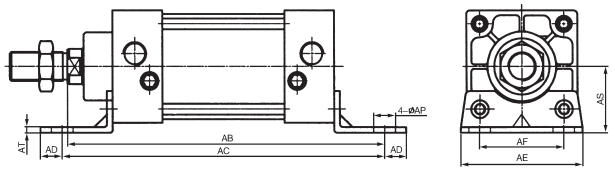


| Bore/Symbol | AB | AC | AD | AE | AF | AS | AT | AP |
|---|---|---|---|---|---|---|---|---|
| 32 | 138.5 | 134 | 9.5 | 50 | 33 | 28 | 3 | 9 |
| 40 | 141.5 | 140 | 14.5 | 57 | 36 | 30 | 3 | 12 |
| 50 | 146 | 149 | 12 | 68 | 47 | 36.5 | 3 | 12 |
| 63 | 153 | 158 | 13 | 80 | 56 | 41 | 3 | 12 |
| 80 | 172.5 | 167 | 16 | 97 | 70 | 49 | 4 | 14 |
| 100 | 178 | 173 | 18 | 112 | 84 | 57 | 4 | 14 |
| 125 | 216 | 214 | 15 | 140 | 90 | 90 | 5 | 16 |
| 160 | 230.5 | 216 | 35 | 178 | 115 | 115 | 5 | 18 |
| 200 | 265.5 | 275 | 26.5 | 220 | 175 | 135 | 6 | 22 |

### TC Dimension

Φ32~Φ200

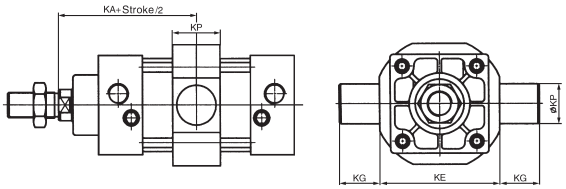


| Bore/Symbol | KE | KG | KP | KA | KB |
|---|---|---|---|---|---|
| 32 | 55 | 16 | 16 | 71.5 | 30 |
| 40 | 63 | 25 | 25 | 71.5 | 30 |
| 50 | 76 | 25 | 25 | 71.5 | 29 |
| 63 | 88 | 25 | 25 | 73 | 30 |
| 80 | 114 | 25 | 25 | 89 | 35 |
| 100 | 132 | 25 | 25 | 92 | 40 |
| 125 | 158 | 25 | 30 | 109 | 39 |
| 160 | 205 | 32 | 32 | 120 | 38 |
| 200 | 248 | 35 | 36 | 130 | 50 |

### TC Foot mounting typeDimension

Φ40~Φ100

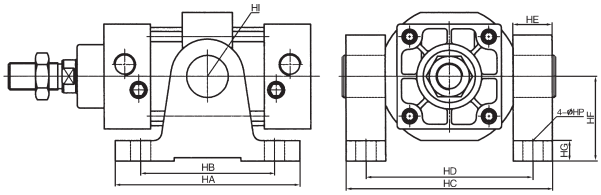


| Bore/Symbol | HA | HB | HC | HD | HE | HF | HG | HP |
|---|---|---|---|---|---|---|---|---|
| 40 | 103 | 80 | 109 | 86 | 23 | 50 | 12 | 11 |
| 50 | 103 | 80 | 122 | 99 | 23 | 50 | 12 | 11 |
| 63 | 103 | 80 | 134 | 111 | 23 | 70 | 12 | 13 |
| 80 | 110 | 85 | 160 | 137 | 23 | 70 | 12 | 13 |
| 100 | 110 | 85 | 178 | 155 | 23 | 70 | 12 | 13 |

### SCD Standard Dimension

Φ32~Φ200

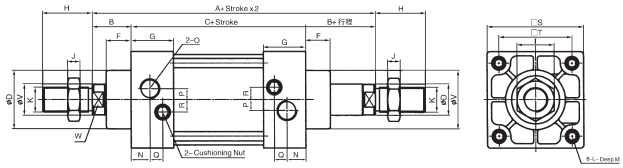


| Bore/Symbol | A | B | C | D | F | G | H | I | J | K | L |
|---|---|---|---|---|---|---|---|---|---|---|---|
| 32 | 143 | 25 | 93 | 28 | 15 | 27.5 | 22 | 17 | 6 | M10×1.25 | M6 |
| 40 | 143 | 25 | 93 | 32 | 15 | 27.5 | 24 | 17 | 7 | M12×1.25 | M6 |
| 50 | 143 | 25 | 93 | 38 | 16 | 27.5 | 32 | 23 | 8 | M16×1.5 | M6 |
| 63 | 147 | 26 | 96 | 38 | 16 | 27.5 | 32 | 23 | 8 | M16×1.5 | M8 |
| 80 | 178 | 35 | 108 | 43 | 21 | 33 | 40 | 26 | 10 | M20×1.5 | M10 |
| 100 | 183 | 35 | 113 | 43 | 21 | 33 | 40 | 26 | 10 | M20×1.5 | M10 |
| 125 | 218 | 47 | 124 | 56 | 32 | 32 | 45 | 41 | 11 | M27×2 | M12 |
| 160 | 245 | 50 | 145 | 64 | 32 | 40 | 50 | 55 | 13 | M36×2 | M16 |
| 200 | 256 | 54 | 148 | 66 | 35 | 41 | 60 | 55 | 13 | M36×2 | M16 |

| Bore/Symbol | M | N | O | P | Q | R | S | T | V | W |
|---|---|---|---|---|---|---|---|---|---|---|
| 32 | 13 | 12 | G1/8" | 6 | 8 | 6 | 45.5 | 33 | 12 | 10 |
| 40 | 13 | 12 | G1/4" | 6 | 8 | 7 | 50 | 37 | 16 | 13 |
| 50 | 13 | 12 | G1/4" | 7 | 8 | 8 | 62 | 47 | 20 | 17 |
| 63 | 13 | 14 | G3/8" | 7 | 8 | 8 | 75 | 56 | 20 | 17 |
| 80 | 14 | 16 | G3/8" | 10 | 10 | 14 | 94 | 70 | 25 | 22 |
| 100 | 16 | 16 | G1/2" | 10 | 10 | 11 | 112 | 84 | 25 | 22 |
| 125 | 15 | 17 | G1/2" | 11 | 6 | 11 | 140 | 110 | 32 | 27 |
| 160 | 18 | 24 | G1/2" | 11 | 5 | 12 | 178 | 140 | 40 | 36 |
| 200 | 18 | 24 | G1/2" | 12 | 6 | 11 | 220 | 175 | 40 | 36 |

### SCJ Standard Dimension

Φ32~Φ200

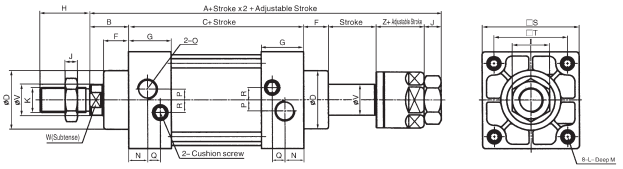


| Bore/Symbol | A | B | C | D | F | G | H | I | J | K | L |
|---|---|---|---|---|---|---|---|---|---|---|---|
| 32 | 160 | 25 | 93 | 28 | 15 | 27.5 | 22 | 17 | 6 | M10×1.25 | M6 |
| 40 | 161 | 25 | 93 | 32 | 15 | 27.5 | 24 | 17 | 7 | M12×1.25 | M6 |
| 50 | 165 | 25 | 93 | 38 | 16 | 27.5 | 32 | 23 | 8 | M16×1.5 | M6 |
| 63 | 168 | 26 | 96 | 38 | 16 | 27.5 | 32 | 23 | 8 | M16×1.5 | M8 |
| 80 | 203 | 35 | 108 | 43 | 21 | 33 | 40 | 26 | 10 | M20×1.5 | M10 |
| 100 | 208 | 35 | 113 | 43 | 21 | 33 | 40 | 26 | 10 | M20×1.5 | M10 |
| 125 | 249 | 47 | 124 | 56 | 32 | 32 | 45 | 41 | 11 | M27×2 | M12 |
| 160 | 280 | 50 | 145 | 64 | 32 | 40 | 50 | 55 | 13 | M36×2 | M16 |
| 200 | 290 | 54 | 148 | 66 | 35 | 41 | 60 | 55 | 13 | M36×2 | M16 |

| Bore/Symbol | M | N | O | P | Q | R | S | T | V | W | Z |
|---|---|---|---|---|---|---|---|---|---|---|---|
| 32 | 13 | 12 | G1/8" | 6 | 8 | 6 | 45.5 | 33 | 12 | 10 | 21 |
| 40 | 13 | 12 | G1/4" | 6 | 8 | 7 | 50 | 37 | 16 | 13 | 21 |
| 50 | 13 | 12 | G1/4" | 7 | 8 | 8 | 62 | 47 | 20 | 17 | 23 |
| 63 | 13 | 14 | G3/8" | 7 | 8 | 8 | 75 | 56 | 20 | 17 | 23 |
| 80 | 14 | 16 | G3/8" | 10 | 10 | 14 | 94 | 70 | 25 | 22 | 29 |
| 100 | 16 | 16 | G1/2" | 10 | 10 | 11 | 112 | 84 | 25 | 22 | 29 |
| 125 | 15 | 17 | G1/2" | 11 | 6 | 11 | 140 | 110 | 32 | 27 | 35 |
| 160 | 18 | 24 | G1/2" | 11 | 5 | 12 | 178 | 140 | 40 | 36 | 40 |
| 200 | 18 | 24 | G1/2" | 12 | 6 | 11 | 220 | 175 | 40 | 36 | 40 |

# Lockable Cylinder

## Specification:

| Type | 40 | 50 | 63 | 80 | 100 | 125 | 160 | 200 |
|---|---|---|---|---|---|---|---|---|
| Motion | Double acting | | | | | | | |
| Series | SZA, SZB | | | | | | | |
| Fluid | Compressed air | | | | | | | |
| Working pressure range (MPa) | 0.1~1 | | | | | | | |
| Operating speed(mm/sec) | 50~500 | | | | | | | |
| Ambient temperature(℃) | -10~70 | | | | | | | |
| Cushion | Adjustable cushion at both ends | | | | | | | |
| Port size (G) | 1/4" | | 3/8" | | 1/2" | | | |

## How to order:

**SZA 50 × 100 FA S**

Specification
- SZA: Front cover with lock Cylinder
- SZB: Back cover with lock Cylinder

Bore

| | |
|---|---|
| Φ40 | Φ100 |
| Φ50 | Φ125 |
| Φ63 | Φ160 |
| Φ80 | Φ200 |

Stroke

Mounting type
- Blank(Standard)

Magnet code
- S1:with magnet + 1pc magnet switch
- S2:with magnet + 2pc magnet switch
- S3:heat resisting seal ring, max temp.150℃
- S4:acid resisting piston rod

## Symbol:

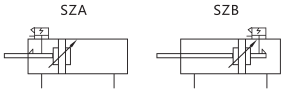


## Product feature:

1. Front and rear caps are finished by aluminum die-casting,CNC mechanically processed with high precision.
2. Aluminum tube is imported, stainless forever with friction& corrosion resistance.
3. Adopt imported none lubrication, long time service and no need lubrication maintenance.
4. Unique cushion technique makes smooth action.
5. May add the sensor equipment to easily control.

## Inner structure drawing:

SZA type

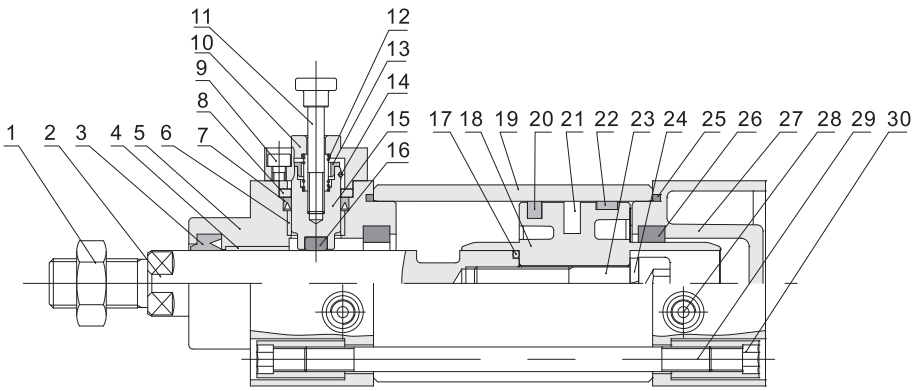


| Number | Name | Number | Name |
|---|---|---|---|
| 1 | Hexagonal nut | 16 | Gasket |
| 2 | Piston rod | 17 | O-ring |
| 3 | Dustproof sealing ring | 18 | Piston |
| 4 | Composite bearing | 19 | Cylinder barrel |
| 5 | Front cover | 20 | C-ring |
| 6 | Composite bearing | 21 | Magnet |
| 7 | Y-ring | 22 | Wearing ring |
| 8 | Pressure ring | 23 | Hexagon socket cap screws |
| 9 | Hexagon socket cap screws | 24 | Elastic washer |
| 10 | Lock cover | 25 | D-ring |
| 11 | Handle | 26 | Buffer sealing ring |
| 12 | Spring | 27 | Rear cover |
| 13 | Fenders | 28 | Buffer adjusting screw |
| 14 | Steel wire retaining ring for shaft | 29 | Pull rod |
| 15 | Lock shaft | 30 | Pull rod nut |

# Lockable Cylinder

## Dimension(mm):

### SZA Dimension

■ Φ40~Φ200

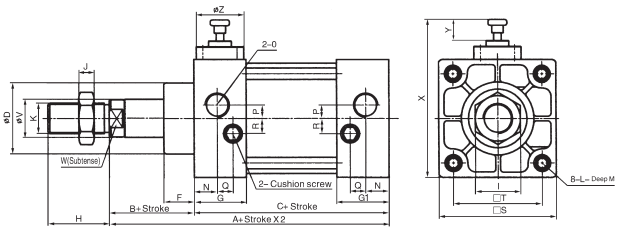


| Bore/Symbol | A | B | C | D | F | G | G1 | H | I | I | K | L |
|---|---|---|---|---|---|---|---|---|---|---|---|---|
| 40 | 120.5 | 25 | 95.5 | 32 | 15 | 30 | 27.5 | 24 | 17 | 7 | M12×1.25 | M6 |
| 50 | 122 | 25 | 97 | 38 | 16 | 31.5 | 27.5 | 32 | 23 | 8 | M16×1.5 | M6 |
| 63 | 125 | 26 | 99 | 38 | 16 | 31.5 | 27.5 | 32 | 23 | 8 | M16×1.5 | M8 |
| 80 | 148 | 35 | 113 | 43 | 21 | 39 | 33 | 40 | 26 | 10 | M20×1.5 | M10 |
| 100 | 154 | 35 | 119 | 43 | 21 | 39 | 33 | 40 | 26 | 10 | M20×1.5 | M10 |
| 125 | 181 | 47 | 134 | 56 | 32 | 42 | 32 | 45 | 41 | 11 | M27×2 | M12 |
| 160 | 197 | 50 | 147 | 64 | 32 | 42 | 40 | 50 | 55 | 13 | M36×2 | M16 |
| 200 | 211 | 54 | 157 | 66 | 35 | 50 | 42 | 60 | 55 | 13 | M36×2 | M16 |

| Bore/Symbol | M | N | O | P | Q | R | S | T | V | W | X | Y | Z |
|---|---|---|---|---|---|---|---|---|---|---|---|---|---|
| 40 | 16 | 12 | G1/4" | 6 | 8 | 7 | 50 | 37 | 16 | 13 | 71 | 10 | 25 |
| 50 | 16 | 12 | G1/4" | 7 | 8 | 8 | 62 | 47 | 20 | 17 | 83 | 10 | 30 |
| 63 | 16 | 14 | G3/8" | 7 | 8 | 8 | 75 | 56 | 20 | 17 | 96 | 8 | 30 |
| 80 | 18 | 16 | G3/8" | 10 | 10 | 14 | 94 | 70 | 25 | 22 | 116 | 8 | 33 |
| 100 | 18 | 16 | G1/2" | 10 | 10 | 11 | 112 | 84 | 25 | 22 | 134 | 8 | 33 |
| 125 | 15 | 17 | G1/2" | 11 | 6 | 11 | 140 | 110 | 32 | 27 | 165 | 10 | 40 |
| 160 | 18 | 24 | G1/2" | 11 | 5 | 12 | 178 | 140 | 40 | 36 | 205 | 10 | 40 |
| 200 | 18 | 24 | G1/2" | 12 | 6 | 11 | 220 | 175 | 40 | 36 | 247 | 10 | 47 |

### SZB Dimension

■ Φ40~Φ200

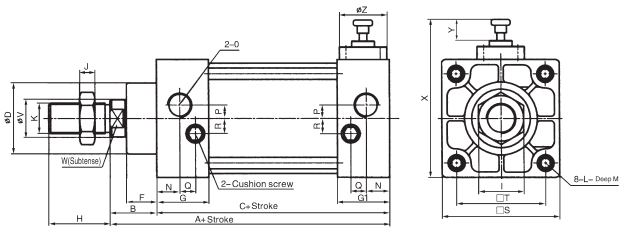


| Bore/Symbol | A | B | C | D | F | G | G1 | H | I | I | K | L |
|---|---|---|---|---|---|---|---|---|---|---|---|---|
| 40 | 120.5 | 25 | 95.5 | 32 | 15 | 27.5 | 30 | 24 | 17 | 7 | M12×1.25 | M6 |
| 50 | 122 | 25 | 97 | 38 | 16 | 27.5 | 31.5 | 32 | 23 | 8 | M16×1.5 | M6 |
| 63 | 125 | 26 | 99 | 38 | 16 | 27.5 | 31.5 | 32 | 23 | 8 | M16×1.5 | M8 |
| 80 | 148 | 35 | 113 | 43 | 21 | 33 | 39 | 40 | 26 | 10 | M20×1.5 | M10 |
| 100 | 154 | 35 | 119 | 43 | 21 | 33 | 39 | 40 | 26 | 10 | M20×1.5 | M10 |
| 125 | 181 | 47 | 134 | 56 | 32 | 32 | 42 | 45 | 41 | 11 | M27×2 | M12 |
| 160 | 197 | 50 | 147 | 64 | 32 | 40 | 42 | 50 | 55 | 13 | M36×2 | M16 |
| 200 | 211 | 54 | 157 | 66 | 35 | 42 | 50 | 60 | 55 | 13 | M36×2 | M16 |

| Bore/Symbol | M | N | O | P | Q | R | S | T | V | W | X | Y | Z |
|---|---|---|---|---|---|---|---|---|---|---|---|---|---|
| 40 | 16 | 12 | G1/4" | 6 | 8 | 7 | 50 | 37 | 16 | 13 | 71 | 10 | 25 |
| 50 | 16 | 12 | G1/4" | 7 | 8 | 8 | 62 | 47 | 20 | 17 | 83 | 10 | 30 |
| 63 | 16 | 14 | G3/8" | 7 | 8 | 8 | 75 | 56 | 20 | 17 | 96 | 8 | 30 |
| 80 | 18 | 16 | G3/8" | 10 | 10 | 14 | 94 | 70 | 25 | 22 | 116 | 8 | 33 |
| 100 | 18 | 16 | G1/2" | 10 | 10 | 11 | 112 | 84 | 25 | 22 | 134 | 8 | 33 |
| 125 | 15 | 17 | G1/2" | 11 | 6 | 11 | 140 | 110 | 32 | 27 | 165 | 10 | 40 |
| 160 | 18 | 24 | G1/2" | 11 | 5 | 12 | 178 | 140 | 40 | 36 | 205 | 10 | 40 |
| 200 | 18 | 24 | G1/2" | 12 | 6 | 11 | 220 | 175 | 40 | 36 | 247 | 10 | 47 |

# Standard Cylinder

## Specification:

| Type | 32 | 40 | 50 | 63 | 80 | 100 |
|---|---|---|---|---|---|---|
| Motion | Double acting | | | | | |
| Series | GPM | | | | | |
| Fluid | Compressed air | | | | | |
| Working pressure range (MPa) | 0.1~1 | | | | | |
| Operating speed(mm/sec) | 50~500 | | | | | |
| Ambient temperature(℃) | -10~70 | | | | | |
| Cushion | Adjustable cushion at both ends | | | | | |
| Port size (G) | 1/8" | 1/4" | | 3/8" | | 1/2" |

## How to order:

**GPM 50 x 100 FA S**

Specification
GPM: Standard Cylinder

Bore

| | |
|---|---|
| Φ40 | Φ100 |
| Φ50 | Φ125 |
| Φ63 | Φ160 |

Stroke

Mounting type

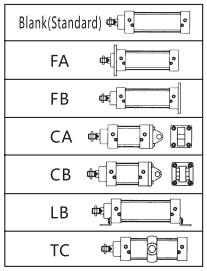


Magnet code

| |
|---|
| S1:with magnet + 1pc magnet switch |
| S2:with magnet + 2pc magnet switch |
| S3:heat resisting seal ring, max temp.150℃ |
| S4:acid resisting piston rod |

## Symbol:

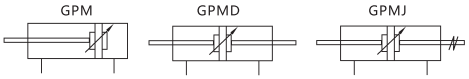


## Product feature:

1. The front and rear covers are finished by aluminum die-casting and CNC mechanically processed, with high precision and international standard quality.
2. With aluminum tube used, it's friction and corrosion resistant and stainless forever.
3. Adopt imported non oil feeding and seal to have long time sevice and no lubricating maintenance.
4. Unique cushion design makes the machines work more smoothly.
5. Sensor equipment can be added to make the electrical wiring and control easily.
6. With no pull rod and good corrosion resistance.

GPM

## Inner structure drawing:

### Standard Cylinder

■ Φ32~Φ100

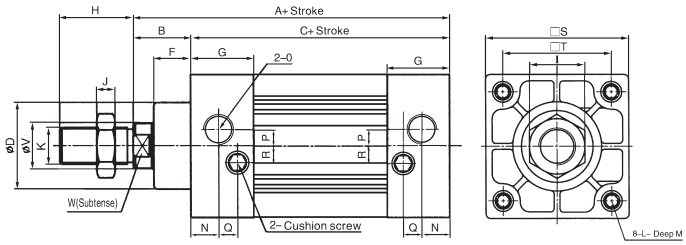


| Bore/Symbol | A | B | C | D | F | G | H | I | J | K | L |
|---|---|---|---|---|---|---|---|---|---|---|---|
| 32 | 118 | 25 | 93 | 28 | 15 | 27.5 | 22 | 17 | 6 | M10×1.25 | M6 |
| 40 | 118 | 25 | 93 | 32 | 15 | 27.5 | 24 | 17 | 7 | M12×1.25 | M6 |
| 50 | 118 | 25 | 93 | 38 | 16 | 27.5 | 32 | 23 | 8 | M16×1.5 | M6 |
| 63 | 121 | 26 | 96 | 38 | 16 | 27.5 | 32 | 23 | 8 | M16×1.5 | M8 |
| 80 | 143 | 35 | 108 | 43 | 21 | 33 | 40 | 26 | 10 | M20×1.5 | M10 |
| 100 | 148 | 35 | 113 | 43 | 21 | 33 | 40 | 26 | 10 | M20×1.5 | M10 |

| Bore/Symbol | M | N | O | P | Q | R | S | T | V | W |
|---|---|---|---|---|---|---|---|---|---|---|
| 32 | 13 | 12 | G1/8" | 6 | 8 | 6 | 45.5 | 33 | 12 | 10 |
| 40 | 13 | 12 | G1/4" | 6 | 8 | 7 | 50 | 37 | 16 | 13 |
| 50 | 13 | 12 | G1/4" | 7 | 8 | 8 | 62 | 47 | 20 | 17 |
| 63 | 13 | 14 | G3/8" | 7 | 8 | 8 | 75 | 56 | 20 | 17 |
| 80 | 14 | 16 | G3/8" | 10 | 10 | 14 | 94 | 70 | 25 | 22 |
| 100 | 16 | 16 | G1/2" | 10 | 10 | 11 | 112 | 84 | 25 | 22 |

Note: The sizes of accesories are same as SC' s

# Standard Cylinder

## Specification:

| Type | 32 | 40 | 50 | 63 | 80 | 100 | 125 | 160 |
|---|---|---|---|---|---|---|---|---|
| Motion | Double acting | | | | | | | |
| Series | QGB | | | | | | | |
| Fluid | Compressed air | | | | | | | |
| Working pressure range (MPa) | 0.1~1 | | | | | | | |
| Operating speed(mm/sec) | 50~500 | | | | | | | |
| Ambient temperature(℃) | -10~70 | | | | | | | |
| Cushion | Adjustable cushion at both ends | | | | | | | |
| Port size (G) | 1/8" | 1/4" | | 3/8" | 1/2" | | | 3/4" |

## Symbol:

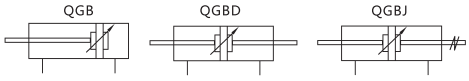


## How to order:

**QGB 50 × 100 FA S**

Specification
QGB: Standard Cylinder

Bore

| | |
|---|---|
| Φ32 | Φ80 |
| Φ40 | Φ100 |
| Φ50 | Φ125 |
| Φ63 | Φ160 |

Stroke

Mounting type

| |
|---|
| Blank(Standard) |
| FA |
| CA |
| LB |
| CB |

Magnet code

| |
|---|
| S1:with magnet + 1pc magnet switch |
| S2:with magnet + 2pc magnet switch |
| S3:heat resisting seal ring, max temp.150℃ |
| S4:acid resisting piston rod |

QGB

## Product feature:

1. Front and rear caps are finished by aluminum die–casting,CNC mechanically processed with high precision.
2. Adopt imported none lubrication, long time service and no need lubrication maintenance.
3. Unique cushion technique makes smooth action.
4. May add the sensor equipment to easily control.

## Inner structure drawing:

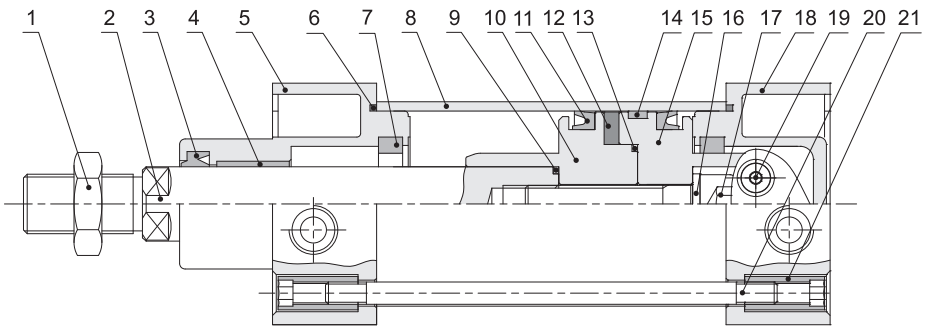


| Number | Name | Number | Name |
|---|---|---|---|
| 1 | Hexagonal nut | 12 | Magnet ring |
| 2 | Piston rod | 13 | O-ring |
| 3 | Dustproof sealing ring | 14 | Wearing |
| 4 | Composite bearing | 15 | Piston |
| 5 | Front cover | 16 | Spring washer |
| 6 | D-ring | 17 | Hexagon socket cap screws |
| 7 | Buffer sealing ring | 18 | Rear cover |
| 8 | Cylinder barrel | 19 | Buffer adjusting screw |
| 9 | O-ring | 20 | Pull rod |
| 10 | Piston-magnet seat | 21 | Pull rod nut |
| 11 | Y-ring | | |

# Standard Cylinder

## Dimension(mm):

### Standard Dimension

■ Φ32~Φ160

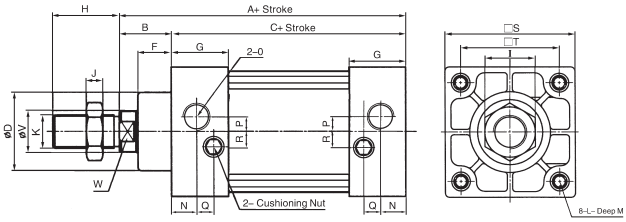


| Bore/Symbol | A | B | C | D | F | G | H | I | J | K | L |
|---|---|---|---|---|---|---|---|---|---|---|---|
| 32 | 118 | 25 | 93 | 28 | 15 | 27.5 | 22 | 17 | 6 | M10×1.25 | M6 |
| 40 | 135 | 30 | 105 | 30 | 23 | 28 | 24 | 17 | 7 | M12×1.25 | M6 |
| 50 | 145 | 35 | 110 | 35 | 25 | 28 | 32 | 23 | 8 | M16×1.5 | M6 |
| 63 | 162 | 37 | 125 | 40 | 25 | 32 | 32 | 23 | 8 | M16×1.5 | M8 |
| 80 | 174 | 46 | 128 | 50 | 30 | 32 | 40 | 26 | 10 | M20×1.5 | M10 |
| 100 | 189 | 51 | 138 | 50 | 35 | 37.5 | 40 | 26 | 10 | M20×1.5 | M10 |
| 125 | 225 | 65 | 160 | 60 | 44.5 | 46.5 | 54 | 41 | 11 | M27×2 | M12 |
| 160 | 260 | 80 | 180 | 65 | 48 | 50 | 72 | 55 | 13 | M36x2 | M16 |

| Bore/Symbol | M | N | O | P | Q | R | S | T | V | W |
|---|---|---|---|---|---|---|---|---|---|---|
| 32 | 14 | 11 | G1/8" | 6 | 9 | 6 | 45.5 | 35 | 12 | 10 |
| 40 | 14 | 11 | G1/4" | 7 | 9 | 7 | 53 | 42 | 16 | 13 |
| 50 | 14 | 11 | G1/4" | 7 | 9 | 7 | 65 | 48 | 20 | 17 |
| 63 | 14 | 14 | G3/8" | 8 | 10 | 8 | 80 | 58 | 20 | 17 |
| 80 | 16 | 14 | G3/8" | 12 | 10 | 10 | 100 | 75 | 25 | 22 |
| 100 | 17 | 16 | G1/2" | 12 | 13 | 10 | 120 | 90 | 25 | 22 |
| 125 | 18 | 23 | G1/2" | 12 | 13 | 18 | 136 | 110 | 32 | 27 |
| 160 | 18 | 24 | G3/4" | 12 | 13 | 22 | 180 | 145 | 40 | 36 |

### CA Dimension

■ Φ32~Φ160

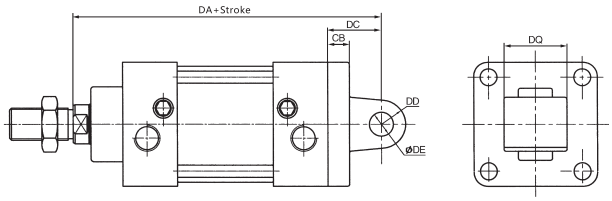


| Bore/Symbol | DA | DC | CB | DD | ΦDE | DQ |
|---|---|---|---|---|---|---|
| 32 | 140 | 22 | 10 | 10 | 10 | 26 |
| 40 | 160 | 25 | 10 | 12 | 12 | 28 |
| 50 | 170 | 25 | 10 | 12 | 12 | 32 |
| 63 | 190 | 32 | 12 | 15 | 16 | 40 |
| 80 | 210 | 36 | 16 | 15 | 16 | 50 |
| 100 | 230 | 41 | 16 | 20 | 20 | 60 |
| 125 | 275 | 53 | 20 | 25 | 25 | 70 |
| 160 | 315 | 57 | 20 | 30 | 30 | 90 |

### CB Dimension

■ Φ32~Φ160

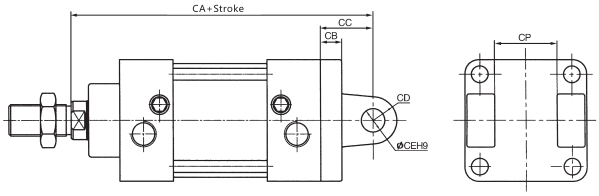


| Bore/Symbol | CA | CC | CB | CD | ΦCE | CP |
|---|---|---|---|---|---|---|
| 32 | 140 | 22 | 10 | 10 | 10 | 26 |
| 40 | 160 | 25 | 10 | 12 | 12 | 28 |
| 50 | 170 | 25 | 10 | 12 | 12 | 32 |
| 63 | 190 | 32 | 12 | 15 | 16 | 40 |
| 80 | 210 | 36 | 16 | 15 | 16 | 50 |
| 100 | 230 | 41 | 16 | 20 | 20 | 60 |
| 125 | 275 | 53 | 20 | 25 | 25 | 70 |
| 160 | 315 | 57 | 20 | 30 | 30 | 90 |

### FA Dimension

■ Φ32~Φ160

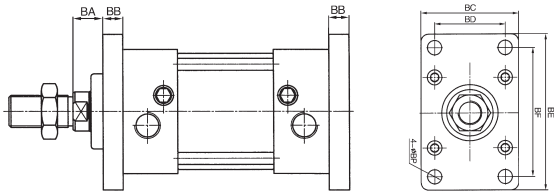


| Bore/Symbol | BA | BB | BC | BD | BE | BF | BP |
|---|---|---|---|---|---|---|---|
| 32 | 15 | 10 | 48 | 33 | 80 | 64 | 7 |
| 40 | 20 | 10 | 55 | 36 | 90 | 72 | 9 |
| 50 | 25 | 10 | 65 | 45 | 110 | 90 | 9 |
| 63 | 25 | 12 | 80 | 50 | 25 | 100 | 9 |
| 80 | 30 | 16 | 100 | 63 | 155 | 126 | 12 |
| 100 | 35 | 16 | 115 | 75 | 180 | 150 | 14 |
| 125 | 45 | 20 | 145 | 90 | 215 | 180 | 16 |
| 160 | 60 | 20 | 190 | 115 | 270 | 230 | 18 |

### LB Dimension

■ Φ32~Φ160

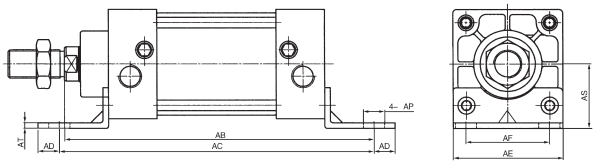


| Bore/Symbol | AB | AC | AD | AE | AF | AP | AS | AT |
|---|---|---|---|---|---|---|---|---|
| 32 | 142.5 | 142 | 11 | 48 | 32 | 7 | 32 | 4 |
| 40 | 163 | 161 | 12 | 55 | 36 | 9 | 36 | 5 |
| 50 | 175 | 170 | 15 | 65 | 45 | 9 | 45 | 6 |
| 63 | 190 | 185 | 13 | 80 | 50 | 9 | 50 | 6 |
| 80 | 215 | 210 | 19 | 100 | 63 | 12 | 63 | 8 |
| 100 | 230 | 220 | 19 | 115 | 75 | 14 | 75 | 8 |
| 125 | 270 | 250 | 25 | 145 | 90 | 16 | 90 | 8 |
| 160 | 320 | 300 | 30 | 190 | 115 | 18 | 115 | 10 |

## Standard Cylinder

### Specification:

| Type | 200 | 250 | 320 | 400 |
|---|---|---|---|---|
| Motion | Double acting | | | |
| Series | QGB | | | |
| Fluid | Compressed air | | | |
| Working pressure range (MPa) | 0.1~1 | | | |
| Operating speed(mm/sec) | 50~500 | | | |
| Ambient temperature(℃) | -10~70 | | | |
| Cushion | Adjustable cushion at both ends | | – | |
| Port size (G) | 3/4" | 1" | | |

### How to order:

**QGB 200 × 320 FA S**

- Specification: QGB: Big Bore Cylinder
- Bore: Φ200, Φ250, Φ320, Φ400
- Stroke
- Mounting type: Blank(Standard)
- Magnet code:
  - S1:with magnet + 1pc magnet switch
  - S2:with magnet + 2pc magnet switch
  - S3:heat resisting seal ring, max temp.150℃
  - S4:acid resisting piston rod

### Symbol:

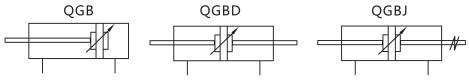

QGB

### Product feature:

1. CNC mechanically processed with high precision. Quality meet international standard.
2. Adopt imported none lubrication,long time service and no need lubrication maintenance.
3. Unique cushion technique makes smooth action.

### Inner structure drawing:

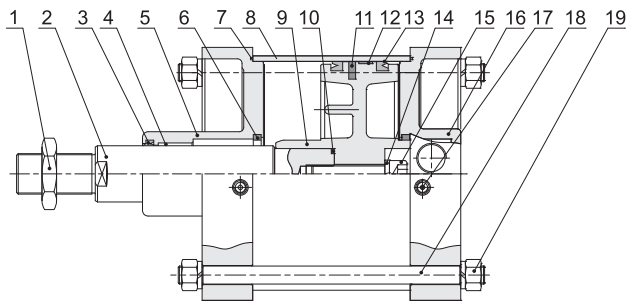


| Number | Name | Number | Name | Number | Name |
|---|---|---|---|---|---|
| 1 | Hexagonal nut | 8 | Cylinder barrel | 15 | Hexagon socket cap screws |
| 2 | Piston rod | 9 | Piston | 16 | Rear cover |
| 3 | Dustproof sealing ring | 10 | O-ring | 17 | Pull rod |
| 4 | Composite bearing | 11 | Magnet | 18 | Hexagonal nut |
| 5 | Front cover | 12 | Wearing ring | 19 | Buffer adjusting screw |
| 6 | Buffer sealing ring | 13 | Y-ring | | |
| 7 | Sealing Ring | 14 | Spring washer | | |

### Dimension(mm):

Standard Dimension

■ Φ200~Φ400

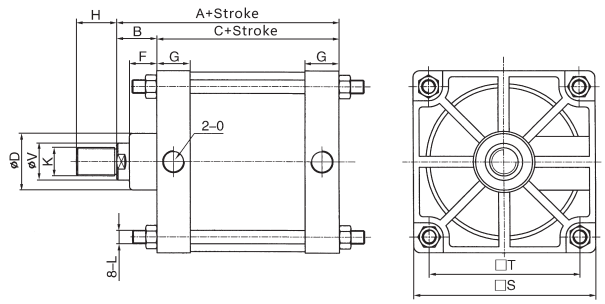


| Bore/Symbol | A | B | C | D | F | G | H | K | L | O | S | T | V |
|---|---|---|---|---|---|---|---|---|---|---|---|---|---|
| 200 | 275 | 95 | 180 | 75 | 53 | 45 | 70 | M36×2 | M16 | G3/4" | 225 | 180 | 50 |
| 250 | 230 | 60 | 170 | 84 | 40 | 50 | 60 | M42×2 | M20 | G1" | 270 | 225 | 50 |
| 320 | 325 | 110 | 215 | 105 | 75 | 60 | 75 | M48×2 | M24 | G1" | 350 | 280 | 63 |
| 400 | 351 | 115 | 236 | 120 | 75 | 63 | 100 | M60×2 | M30 | G1" | 430 | 350 | 80 |

Note: QGB320 and QGB400 are without magnet.

# Standard Cylinder

## Specification:

| Type | 32 | 40 | 50 | 63 | 80 | 100 | 125 | 160 |
|---|---|---|---|---|---|---|---|---|
| Motion | Double acting | | | | | | | |
| Series | QGBQ | | | | | | | |
| Fluid | Compressed air | | | | | | | |
| Working pressure range (MPa) | 0.1~1 | | | | | | | |
| Operating speed(mm/sec) | 50~500 | | | | | | | |
| Ambient temperature(℃) | -10~70 | | | | | | | |
| Cushion | Adjustable cushion at both ends | | | | | | | |
| Port size (G) | 1/8" | 1/4" | | 3/8" | | 1/2" | | |

## How to order:

**QGBQ 50 × 100 FA S AB**

- Specification: QGBQ: Standard Cylinder
- Bore: Φ32, Φ63, Φ40, Φ80, Φ50, Φ100
- Stroke
- Mounting type: Blank(Standard), FA, FB, CA, CB, LB, TC
- Magnet code: S1:with magnet + 1pc magnet switch; S2:with magnet + 2pc magnet switch; S3:heat resisting seal ring, max temp.150℃; S4:acid resisting piston rod
- Position of port and cushion: Blank; Port A and Cushion B; Port B and Cushion C; Port B and Cushion A; Port C and Cushion B

## Symbol:

QGBQ

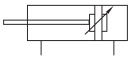

## Product feature:

1. Front and rear caps are finished by aluminum die-casting,CNC mechanically processed with high precision.
2. Aluminum tube is imported, stainless forever with friction& corrosion resistance .
3. Adopt imported none lubrication, long time service and no need lubrication maintenance.
4. Unique cushion technique makes smooth action.
5. May add the sensor equipment to easily control.

## Inner structure drawing:

Standard Dimension

■ Φ32~Φ100

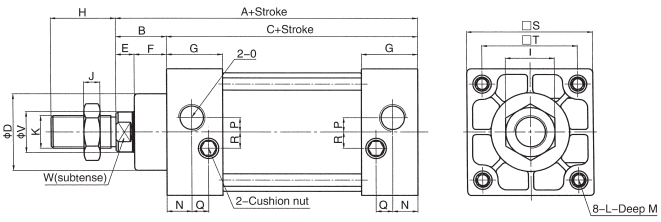


■ Φ125~Φ160

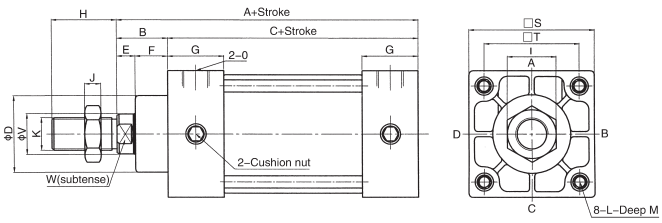


| Bore/Symbol | A | B | C | D | E | F | G | H | I | J | K | L |
|---|---|---|---|---|---|---|---|---|---|---|---|---|
| 32 | 118 | 25 | 93 | 28 | 10 | 15 | 27.5 | 22 | 17 | 6 | M10×1.25 | M6 |
| 40 | 118 | 25 | 93 | 32 | 10 | 15 | 27.5 | 24 | 17 | 7 | M12×1.25 | M6 |
| 50 | 118 | 25 | 93 | 37.5 | 9 | 16 | 27.5 | 32 | 23 | 8 | M16×1.5 | M6 |
| 63 | 121 | 26 | 95 | 38 | 10 | 16 | 27.5 | 32 | 23 | 8 | M16×1.5 | M8 |
| 80 | 143 | 35 | 107 | 43 | 15.5 | 21 | 33 | 40 | 26 | 10 | M20×1.5 | M10 |
| 100 | 143 | 35 | 108 | 43 | 15.5 | 21 | 33 | 40 | 26 | 10 | M20×1.5 | M10 |
| 125 | 149 | 35 | 114 | 52 | 14 | 21 | 38 | 54 | 38 | 11 | M27×2 | M12 |
| 160 | 157 | 41 | 116 | 62 | 16 | 25 | 38 | 72 | 50 | 13 | M36×2 | M16 |

| Bore/Symbol | M | N | O | P | Q | R | S | T | V | W |
|---|---|---|---|---|---|---|---|---|---|---|
| 32 | 13 | 12 | G1/8" | 6 | 8 | 6 | 45.5 | 33 | 12 | 10 |
| 40 | 13 | 12 | G1/4" | 6 | 8 | 7 | 50 | 37 | 16 | 13 |
| 50 | 13 | 12 | G1/4" | 7 | 8 | 8 | 62 | 47 | 20 | 17 |
| 63 | 13 | 14 | G3/8" | 7 | 8 | 8 | 75 | 56 | 20 | 17 |
| 80 | 14 | 16 | G3/8" | 10 | 10 | 14 | 94 | 70 | 25 | 22 |
| 100 | 16 | 16 | G1/2" | 10 | 10 | 11 | 112 | 84 | 25 | 22 |
| 125 | 15 | - | G1/2" | - | - | - | 138 | 104 | 32 | 27 |
| 160 | 18 | - | G1/2" | - | - | - | 178 | 134 | 40 | 36 |

# ISO15552 Standard Cylinder

## Specification:

| Type | 125 | 160 | 200 | 250 |
|---|---|---|---|---|
| Motion | Double acting | | | |
| Series | SG, SGD, SGJ | | | |
| Fluid | Compressed air | | | |
| Working pressure range (MPa) | 0.1~1 | | | |
| Operating speed(mm/sec) | 50~500 | | | |
| Ambient temperature(℃) | -10~70 | | | |
| Cushion | Adjustable cushion at both ends | | | |
| Port size (G) | 1/2" | 3/4" | | 1" |

## Symbol:

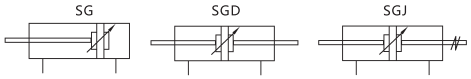


## How to order:

**SG 125×50 FA S**

- Specification
  - SG: Standard Cylinder
  - SGD: Double axial Cylinder
  - SGJ: Double adjustable Cylinder
- Bore
  - Φ125
  - Φ160
  - Φ200
  - Φ250
- Stroke
- Mounting type
  - Blank(Standard)
  - FA
  - FB
  - CA
  - CB
  - LB
  - TC
- Magnet code
  - S1:with magnet + 1pc magnet switch
  - S2:with magnet + 2pc magnet switch
  - S3:heat resisting seal ring, max temp.150℃
  - S4:acid resisting piston rod

SG

## Product feature:

1. ISO 15552 (original ISO6431) standard cylinder.
2. The piston seal adopts two Y type one–way seal structure with compensation function, long sevice life and low starting pressure.
3. Cushion adjustment of cylinder is stable.
4. Various standard cylinders and installing access–ories are optional for customers.
5. Choosing high temperature resistant seal materials to ensure cylinders can work normally under the temperature of 150℃.
6. SG series cylinder is aluminum tube type. Steel pipe type cylinder is also optional.

## Inner structure drawing:

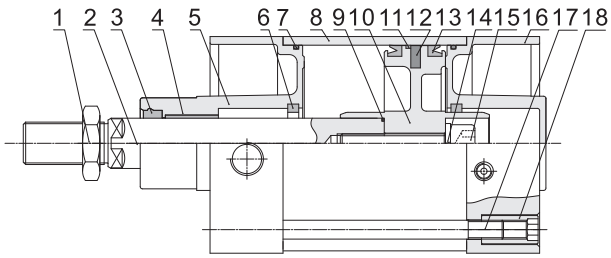


| Number | Name | Number | Name |
|---|---|---|---|
| 1 | Hexagonal nut | 10 | Piston |
| 2 | Piston rod | 11 | Wearing ring |
| 3 | Dustproof sealing ring | 12 | Magnet |
| 4 | Composite bearing | 13 | Y-ring |
| 5 | Front cover | 14 | Spring washer |
| 6 | Buffer sealing ring | 15 | Hexagon socket cap screws |
| 7 | Sealing Ring | 16 | Rear cover |
| 8 | Cylinder barrel | 17 | Pull rod |
| 9 | O-ring | 18 | Pull rod nut |

# ISO15552 Standard Cylinder

## Dimension(mm):

### SG Standard Dimension

■ Φ125~Φ250

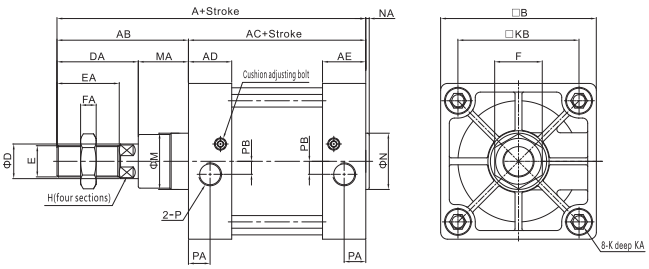


| Bore/Symbol | A | AB | AC | AD | AE | B | D | DA | E | EA | F |
|---|---|---|---|---|---|---|---|---|---|---|---|
| 125 | 279 | 119 | 160 | 46 | 46 | 140 | 32 | 74 | M27×2 | 54 | 41 |
| 160 | 332 | 152 | 180 | 50 | 50 | 180 | 40 | 94 | M36×2 | 72 | 55 |
| 200 | 347 | 167 | 180 | 50 | 50 | 220 | 40 | 100 | M36×2 | 72 | 55 |
| 250 | 389 | 189 | 200 | 58 | 58 | 282 | 50 | 111 | M42×2 | 84 | 65 |

| Bore/Symbol | FA | H | K | KA | KB | M | MA | N | NA | P | PA | PB |
|---|---|---|---|---|---|---|---|---|---|---|---|---|
| 125 | 13.5 | 27 | M12 | 20 | 110 | 60 | 45 | 60 | 4 | G1/2" | 23 | 14 |
| 160 | 18 | 36 | M16 | 24 | 140 | 65 | 58 | 65 | 4 | G3/4" | 25 | 15 |
| 200 | 18 | 36 | M16 | 24 | 175 | 75 | 67 | 75 | 5 | G3/4" | 25 | 15 |
| 250 | 21 | 46 | M20 | 25 | 220 | 90 | 78 | 90 | 8 | G1" | 31 | 22 |

Notes:With or without magnet, the dimensions are the same..

### SGD Standard Dimension

■ Φ125~Φ250

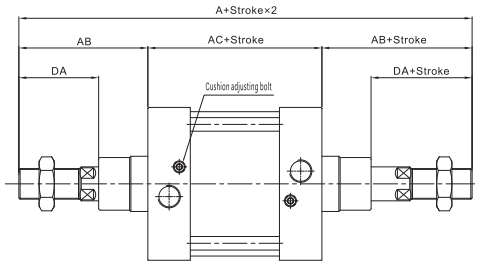


| Bore/Symbol | A | AB | AC | DA |
|---|---|---|---|---|
| 125 | 398 | 119 | 160 | 74 |
| 160 | 484 | 152 | 180 | 94 |
| 200 | 514 | 167 | 180 | 100 |
| 250 | 578 | 189 | 200 | 111 |

### SGD Standard Dimension

■ Φ125~Φ250

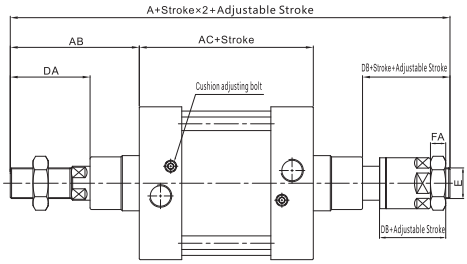


| Bore/Symbol | A | AB | AC | DA | DB | E | FA |
|---|---|---|---|---|---|---|---|
| 125 | 366.5 | 119 | 160 | 74 | 42.5 | M27×2 | 13.5 |
| 160 | 458 | 152 | 180 | 94 | 68 | M36×2 | 18 |
| 200 | 482 | 167 | 180 | 100 | 68 | M36×2 | 18 |
| 250 | 547 | 189 | 200 | 111 | 80 | M42×2 | 21 |

Notes:1、With or without magnet, the dimensions are the same.
2、The unmarked dimension is the same as SG Standard type.

# Standard Cylinder

## Specification:

| Type | 32 | 40 | 50 | 63 | 80 | 100 | 125 |
|---|---|---|---|---|---|---|---|
| Motion | Double acting | | | | | | |
| Series | JSI, JSID, JSIJ | | | | | | |
| Fluid | Compressed air | | | | | | |
| Working pressure range (MPa) | 0.1~1 | | | | | | |
| Operating speed(mm/sec) | 50~800 | | | | | | |
| Ambient temperature(℃) | -20~80 | | | | | | |
| Cushion | Adjustable cushion at both ends | | | | | | |
| Port size (G) | 1/8" | 1/4" | | 3/8" | | 1/2" | |

## How to order:

**JSI 80×50 FA S**

- Specification
  - JSI: Standard Cylinder
  - JSID: Double axial Cylinder
  - JSIJ: Double adjustable Cylinder
- Bore

| | |
|---|---|
| Φ32 | Φ80 |
| Φ40 | Φ100 |
| Φ50 | Φ125 |
| Φ63 | |

- Stroke
- Mounting type
  - Blank(Standard)
  - FA
  - FB
  - CA
  - CB
  - LB
  - TC
- Magnet code
  - S1:with magnet + 1pc magnet switch
  - S2:with magnet + 2pc magnet switch
  - S3:heat resisting seal ring, max temp.150℃
  - S4:acid resisting piston rod

## Symbol:

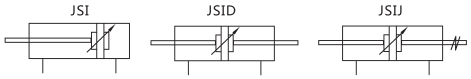


## Product feature:

1. JIS standard cylinder.
2. The piston seal adopts special two-way sealing structure with compact size and oil storing function.
3. JSI series cylinder is aluminum tube M type, with no pull rod and good corrosion resistance.
4. Cushion adjustment of cylinder is stable.
5. Various standard cylinders and installing access-ories are optional for customers.
6. Choosing high temperature resistant seal materials to ensure cylinders can work normally under the temperature of 150℃.

## Inner structure drawing:

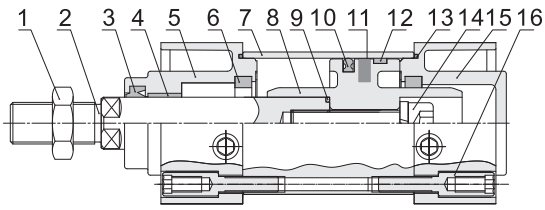


| Number | Name | Number | Name |
|---|---|---|---|
| 1 | Hexagonal nut | 9 | O-ring |
| 2 | Piston rod | 10 | Sealing Ring |
| 3 | Dustproof sealing ring | 11 | Magnet |
| 4 | Composite bearing | 12 | Wearing ring |
| 5 | Front cover | 13 | O-ring |
| 6 | Buffer sealing ring | 14 | Hexagon socket cap screws |
| 7 | Cylinder barrel | 15 | Rear cover |
| 8 | Piston | 16 | End cover screw |

# Standard Cylinder

## Dimension(mm):

### JSI Standard Dimension

■ Φ32~Φ125

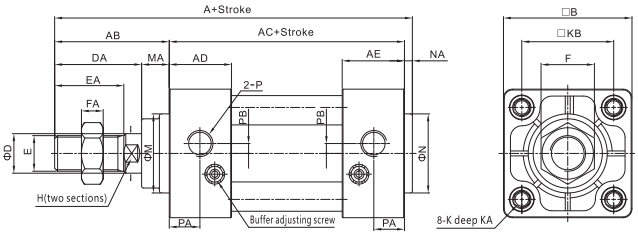


| Bore/Symbol | A | AB | AC | AD | AE | B | D | DA | E | EA | F | FA | H | M | MA |
|---|---|---|---|---|---|---|---|---|---|---|---|---|---|---|---|
| 32 | 135 | 47 | 84 | 27 | 27 | 46 | 12 | 34 | M10×1.25 | 22 | 17 | 6 | 10 | 30 | 13 |
| 40 | 139 | 51 | 84 | 27 | 27 | 52 | 16 | 38 | M14×1.5 | 30 | 19 | 8 | 14 | 35 | 13 |
| 50 | 156 | 58 | 94 | 31.5 | 31.5 | 65 | 20 | 44 | M18×1.5 | 35 | 27 | 11 | 18 | 40 | 14 |
| 63 | 156 | 58 | 94 | 30.5 | 30.5 | 75 | 20 | 44 | M18×1.5 | 35 | 27 | 11 | 18 | 45 | 14 |
| 80 | 190 | 72 | 114 | 38 | 38 | 95 | 25 | 52 | M22×1.5 | 40 | 32 | 13 | 22 | 45 | 20 |
| 100 | 190 | 72 | 114 | 38 | 38 | 114 | 30 | 52 | M26×1.5 | 40 | 36 | 13 | 26 | 55 | 20 |
| 125 | 223 | 97 | 120 | 38 | 38 | 137 | 32 | 70 | M27×2 | 54 | 41 | 13.5 | 27 | 60 | 27 |

| Bore/Symbol | K(Without TC) | K(With TC) | KA(Without TC) | KA(With TC) | KB | N | NA | P | PA | PB |
|---|---|---|---|---|---|---|---|---|---|---|
| 32 | M6 | M5 | 16 | 14 | 32.5 | 30 | 4 | G1/8" | 13 | 4 |
| 40 | M6 | M5 | 16 | 14 | 38 | 35 | 4 | G1/4" | 14 | 4 |
| 50 | M8 | M6 | 16 | 16 | 46.5 | 40 | 4 | G1/4" | 15.5 | 5 |
| 63 | M8 | M6 | 16 | 16 | 56.5 | 45 | 4 | G3/8" | 16.5 | 9 |
| 80 | M10 | M8 | 16 | 16 | 72 | 45 | 4 | G3/8" | 19 | 11.5 |
| 100 | M10 | M8 | 16 | 16 | 89 | 55 | 4 | G1/2" | 19 | 17 |
| 125 | M12 | M12 | 20 | 18 | 110 | 60 | 6 | G1/2" | 19 | 17 |

Notes:With or without magnet, the dimensions are the same..

### JSID Standard Dimension

■ Φ32~Φ125

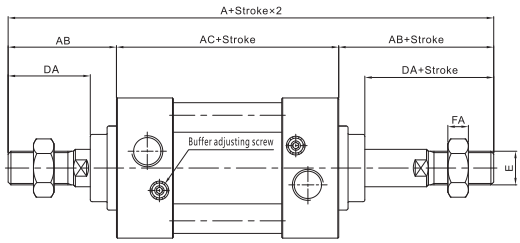


| Bore/Symbol | A | AB | AC | DA | E | FA |
|---|---|---|---|---|---|---|
| 32 | 178 | 47 | 84 | 34 | M10×1.25 | 6 |
| 40 | 186 | 51 | 84 | 38 | M14×1.5 | 8 |
| 50 | 210 | 58 | 94 | 44 | M18×1.5 | 11 |
| 63 | 210 | 58 | 94 | 44 | M18×1.5 | 11 |
| 80 | 258 | 72 | 114 | 52 | M22×1.5 | 13 |
| 100 | 258 | 72 | 114 | 52 | M26×1.5 | 13 |
| 125 | 314 | 97 | 120 | 70 | M27×2 | 13.5 |

### JSIJ Standard Dimension

■ Φ32~Φ125

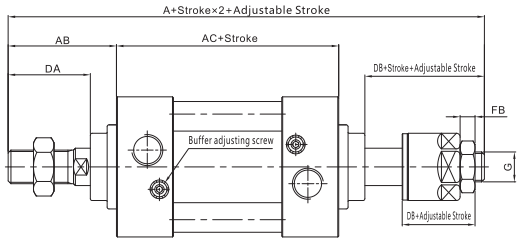


| Bore/Symbol | A | AB | AC | DA | DB | FB | G |
|---|---|---|---|---|---|---|---|
| 32 | 171 | 47 | 84 | 34 | 27 | 6 | M10×1.25 |
| 40 | 176 | 51 | 84 | 38 | 28 | 7 | M12×1.25 |
| 50 | 195 | 58 | 94 | 44 | 29 | 8 | M16×1.5 |
| 63 | 195 | 58 | 94 | 44 | 29 | 8 | M16×1.5 |
| 80 | 241.5 | 72 | 114 | 52 | 35.5 | 10 | M20×1.5 |
| 100 | 248.5 | 72 | 114 | 52 | 42.5 | 13.5 | M27×2 |
| 125 | 286.5 | 97 | 120 | 70 | 42.5 | 13.5 | M27×2 |

Notes:1、With or without magnet, the dimensions are the same.
2、The unmarked dimension is the same as SG Standard type.

# Clamp Cylinder

## Specification:

| Type | 40 | 50 | 63 | 80 |
|---|---|---|---|---|
| Port size | 1/4" | | | 3/8" |
| Fluid | Compressed air | | | |
| Working pressure range (MPa) | 0.1~1 | | | |
| Operating speed(mm/sec) | 50~500 | | | |
| Ambient temperature(℃) | 5~60 | | | |
| Cushion | Attach two sides | | | |
| Oil | Luicbration Needless(Oil spray luicbration) | | | |
| Mounting | Two Ears | | | |

## How to order:

**QGBH A 50 × 75**

- Specification: QGBH: Clamp Cylinder
- Clamp Cylinder: A Series: 16.5; B Series: 19.5
- Bore: Φ50, Φ50, Φ63, Φ80
- Stroke

## Symbol:

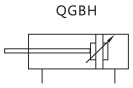

QGBH

## Product feature:

Front and rear caps are finished by aluminum die–casting,processed with high precision. Three side are settled air port,easy for installation,The flow–limiting valve in front and back sides,movement speed is adjustable .Adjustable air cushion in the front and back sides, Interface of double–toggle is special designing for welder when weld the car body.

## Inner structure drawing:

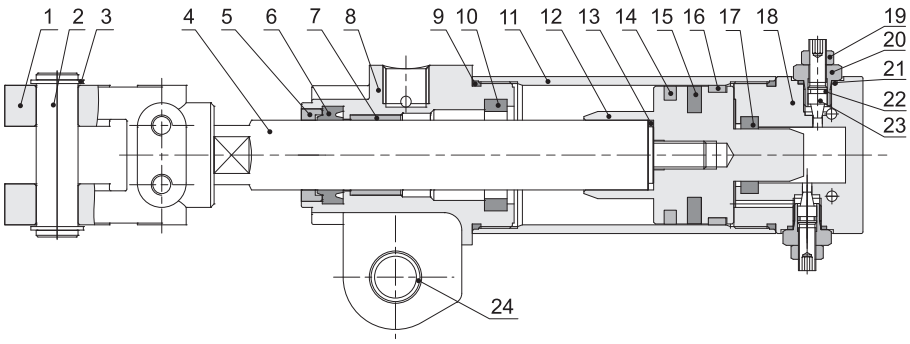


| Number | Name | Number | Name |
|---|---|---|---|
| 1 | Y connector | 13 | O-ring |
| 2 | Lock shaft | 14 | C-ring |
| 3 | Circlip for shaft | 15 | Magnet |
| 4 | Piston rod | 16 | Wearing ring |
| 5 | Steel sleeve | 17 | Buffer sealing ring |
| 6 | Dustproof sealing ring | 18 | Rear cover |
| 7 | Composite bearing | 19 | Fixed nut |
| 8 | Front cover | 20 | Adjusting nut |
| 9 | O-ring | 21 | O-ring |
| 10 | Buffer sealing ring | 22 | O-ring |
| 11 | Cylinder barrel | 23 | Adjusting screw |
| 12 | Piston | 24 | Composite bearing |

## Clamp Cylinder

### Dimension(mm):

#### QGBH40、50、63

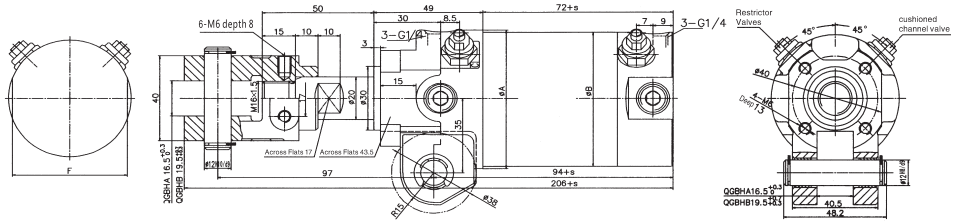


| Bore | F | ΦA | ΦB |
|---|---|---|---|
| 40 | 42 | Φ52 | Φ45 |
| 50 | 51.5 | Φ60 | Φ55 |
| 63 | 68.5 | Φ74 | Φ72 |

#### QGBH80

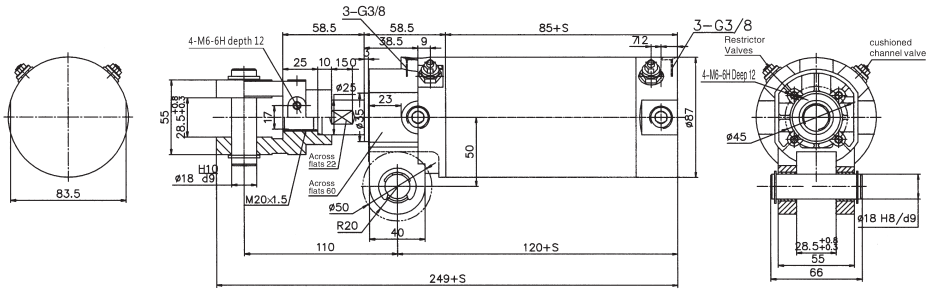


#### QGBH40、50、63 Dimension of joint shape

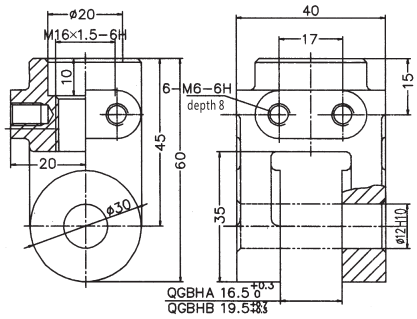


#### QGBH80 Dimension of joint shape

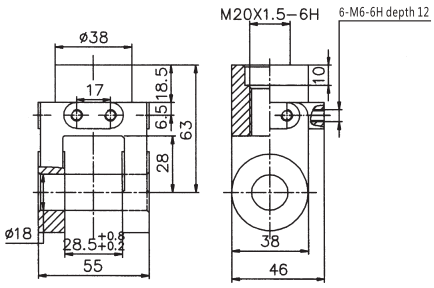

QGBH

# Cylinder With Valve

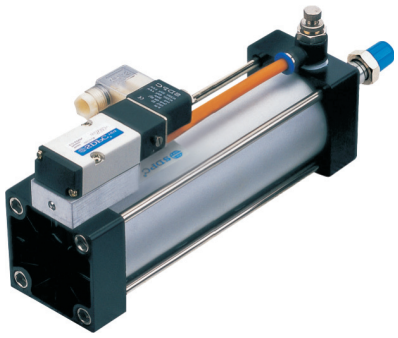

## Product feature:

AVS assembly pedestal can directly set the valve on make one pneumatic working unit

Attention:Min.stroke 100mm

## Assembly example

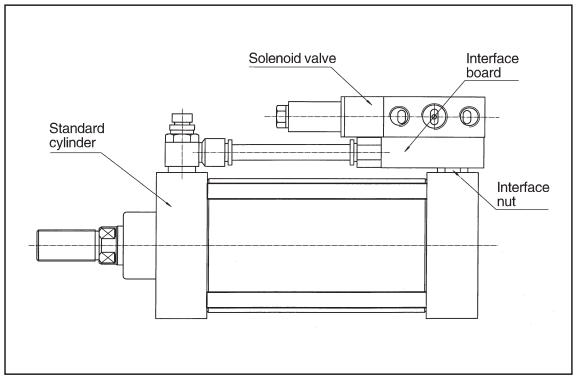


## Dimension(mm):

### AVS Joint panel

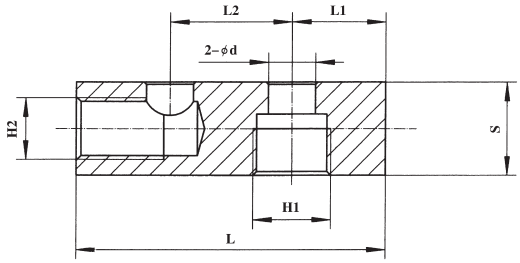


| Type | Bore optional | d | G1 | G2 | L | L1 | L2 | S | Olenoid Valve optional |
|---|---|---|---|---|---|---|---|---|---|
| 32 | 32,40,50 | 7 | G1/4" | G1/4" | 50 | 13.5 | 23 | 20 | 4M210、4M220、4M230 |
| 40 | 63,80 | 10 | G3/8" | G3/8" | 66 | 20 | 26 | 20 | 4M310、4M320、4M330 |
| 50 | 100 | 12 | G1/2" | G1/2" | 104 | 29 | 36 | 34 | 4M410、4M420、4M430 |

### AVSJ Connector

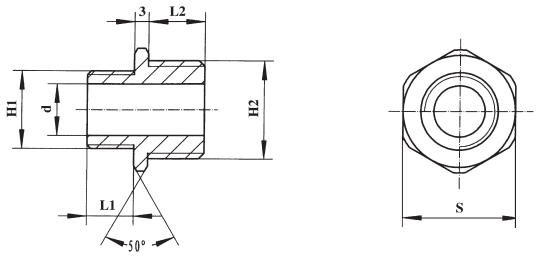


| No | H1 | H1 | d | L1 | L2 | S |
|---|---|---|---|---|---|---|
| AVSJ1 | G1/4" | G1/8" | 5 | 7 | 7 | 14 |
| AVSJ2 | G1/4" | G1/4" | 9 | 7 | 7 | 14 |
| AVSJ3 | G3/8" | G3/8" | 11 | 7 | 10 | 17 |
| AVSJ4 | G1/2" | G1/2" | 12 | 14 | 14 | 22 |

# Accessories of Cylinder Joint

## Accessories of Cylinder Joint

### How to order:

**Y M16 × 1.5**

Joint Type

| |
|---|
| Y: Y Joint |
| I: I Joint |
| F: Float and Joint |
| SG: SG Type Y Joint |
| U: Fish eye joint |

Threaded type

### Joint Dimension(mm):

#### Y Joint

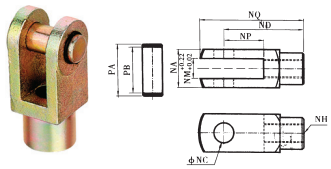


#### I Joint

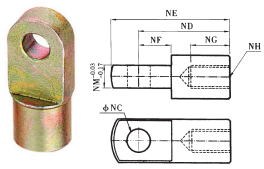


| Type | Threaded Joint(M) | NA | NC | ND | NE | NG | NM | NP | NQ | PA | PB |
|---|---|---|---|---|---|---|---|---|---|---|---|
| Y-M10×1.25 | M10×1.25 | 19 | 10 | 40 | 52 | 20 | 10 | 20 | 52 | 26.2 | 20 |
| Y-M12×1.25 | M12×1.25 | 25.4 | 12 | 48 | 67 | 20 | 12 | 24 | 62 | 32.8 | 26.5 |
| Y-M16×1.5 | M16×1.5 | 33 | 16 | 64 | 89 | 23 | 16 | 32 | 83 | 39.3 | 33 |
| Y-M16×1.5 | M16×1.5 | 33 | 16 | 64 | 89 | 23 | 16 | 32 | 83 | 39.3 | 33 |
| Y-M20×1.5 | M20×1.5 | 44.4 | 20 | 80 | 112 | 30 | 20 | 40 | 105 | 53.3 | 45 |
| Y-M20×1.5 | M20×1.5 | 44.4 | 20 | 80 | 112 | 30 | 20 | 40 | 105 | 53.3 | 45 |
| Y-M27×2 | M27×2 | 64 | 20 | 99 | 119 | 56 | 32 | 50 | 119 | 73 | 67 |
| Y-M36×2 | M36×2 | 82 | 28 | 125 | 155 | 72 | 41 | 60 | 155 | 90 | 83 |
| Y-M36×2 | M36×2 | 82 | 28 | 125 | 155 | 72 | 41 | 60 | 155 | 90 | 83 |

#### Float and Joint

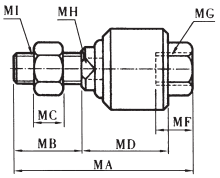


| Type | MA | MB | MC | MD | MF | MG | MH | MI |
|---|---|---|---|---|---|---|---|---|
| F-M8×1.25 | 50 | 19 | 5 | 24 | 12 | M8×1.25 | 8 | M8×1.25 |
| F-M10×1.25 | 60 | 22 | 7 | 30 | 15 | M10×1.25 | 10 | M10×1.25 |
| F-M12×1.25 | 67 | 22 | 8 | 35.5 | 17 | M12×1.25 | 12 | M12×1.25 |
| F-M14×1.5 | 73 | 22 | 8 | 42 | 17 | M14×1.5 | 14 | M14×1.5 |
| F-M16×1.5 | 92 | 24.5 | 8 | 55.5 | 24 | M16×1.5 | 17 | M16×1.5 |
| F-M18×1.5 | 92 | 24.5 | 8 | 41.5 | 24 | M18×1.5 | 18 | M18×1.5 |
| F-M20×1.5 | 105 | 31 | 8 | 57.5 | 29 | M20×1.5 | 22 | M20×1.5 |
| F-M27×2 | 121 | 35 | 10 | 71 | 34 | M27×2 | 30 | M27×2 |
| F-M36×2 | 168 | 52 | 12 | 98 | 49 | M36×2 | 36 | M36×2 |

#### SG Type Y Joint

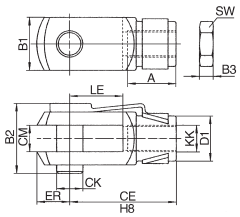


| Type | Threaded Joint(M) | A | B1 | B2 | B3 | CE/H8 | CK | CM | D1 | ER | LE | SW |
|---|---|---|---|---|---|---|---|---|---|---|---|---|
| SG-M6 | M6 | 12 | 12 | 16 | 3.2 | 24 | 6 | 6 | 6 | 7 | 12 | 10 |
| SG-M8 | M8 | 16 | 16 | 21.5 | 4 | 32 | 8 | 8 | 8 | 10 | 16 | 13 |
| SG-M10 | M10 | 20 | 20 | 26 | 5 | 40 | 10 | 10 | 10 | 12 | 20 | 17 |
| SG-M10×1.25 | M10×1.25 | 20 | 20 | 26 | 5 | 40 | 10 | 10 | 10 | 12 | 20 | 17 |
| SG-M12 | M12 | 24 | 24 | 31 | 6 | 48 | 12 | 12 | 12 | 14 | 24 | 19 |
| SG-M12×1.25 | M12×1.25 | 24 | 24 | 31 | 6 | 48 | 12 | 12 | 12 | 14 | 24 | 19 |
| SG-M16 | M16 | 32 | 32 | 39 | 8 | 64 | 16 | 16 | 16 | 19 | 32 | 24 |
| SG-M16×1.5 | M16×1.5 | 32 | 32 | 39 | 8 | 64 | 16 | 16 | 16 | 19 | 32 | 24 |
| SG-M20 | M20 | 24 | 40 | 53 | 10 | 60 | 20 | 20 | 20 | 24 | 36 | 30 |
| SG-M20×1.5 | M20×1.5 | 40 | 40 | 53 | 10 | 80 | 20 | 20 | 20 | 25 | 40 | 30 |
| SG-M27×2-B | M27×2-B | 56 | 55 | 74 | 13.5 | 110 | 30 | 30 | 30 | 38 | 54 | 41 |
| SG-M36×2 | M36×2 | 56 | 70 | 90.5 | 18 | 144 | 35 | 35 | 35 | 44 | 72 | 55 |

#### Fish eye joint

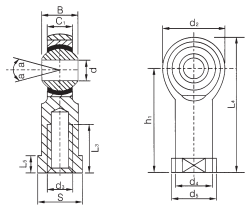


| Type | Threaded Joint(M) | d | d2 | d5 | S | B | L5 | C1 | h1 | L3 | d4 | L4 |
|---|---|---|---|---|---|---|---|---|---|---|---|---|
| U-M6×1 | M6×1 | 6 | 20 | 13 | 11 | 9 | 5 | 6.75 | 30 | 12 | 10 | 45 |
| U-M8×1.25 | M8×1.25 | 8 | 24 | 16 | 14 | 12 | 5 | 9 | 36 | 16 | 12.5 | 48 |
| U-M10×1.25 | M10×1.25 | 10 | 28 | 19 | 17 | 14 | 6.5 | 10.5 | 43 | 20 | 15 | 57 |
| U-M12×1.25 | M12×1.25 | 12 | 32 | 22 | 19 | 16 | 6.5 | 12 | 50 | 22 | 17.5 | 66 |
| U-M14×1.5 | M14×1.5 | 14 | 36 | 25 | 22 | 19 | 8 | 13.5 | 57 | 25 | 20 | 75 |
| U-M16×1.5 | M16×1.5 | 16 | 40 | 27 | 22 | 21 | 8 | 15 | 64 | 28 | 22 | 84 |
| U-M18×1.5 | M18×1.5 | 18 | 46 | 31 | 27 | 23 | 10 | 16.5 | 71 | 32 | 25 | 94 |
| U-M20×1.5 | M20×1.5 | 20 | 50 | 34 | 30 | 25 | 10 | 18 | 77 | 33 | 27.5 | 102 |
| U-M22×1.5 | M22×1.5 | 22 | 54 | 37 | 32 | 28 | 12 | 20 | 84 | 37 | 30 | 111 |
| U-M24×2 | M24×2 | 25 | 60 | 42 | 30 | 31 | 12 | 22 | 94 | 42 | 33.5 | 124 |
| U-M27×2 | M27×2 | 28 | 66 | 46 | 41 | 35 | 14 | 26 | 103 | 41 | 37 | 136 |
| U-M36×2 | M36×2 | 35 | 70 | 50 | 41 | 43 | 15 | 25 | 130 | 51 | 40 | 145 |

# ISO6432 Standard Mini Cylinder

## Specification:

| Type | 8 | 10 | 12 | 16 | 20 | 25 | 32 | 40 |
|---|---|---|---|---|---|---|---|---|
| Motion | Double acting | | | | | | | |
| Series | MI, MID, MIJ | | | | | | | |
| Fluid | Compressed air | | | | | | | |
| Operating pressure range (Mpa) | 0.1~1 | | | | | | | |
| Operating speed(mm/sec) | 50~800 | | | | | | | |
| Ambient temperature(℃) | -20~80 | | | | | | | |
| Cushion | Adjustable cushion at both ends | | | | | | | |
| Port size (G) | M5×0.8 | | | | 1/8" | | | 1/4" |

## How to order:

**MI 10 × 40 S**

- Specification
  - MI: Standard Mini Cylinder
  - MID: Double axial Mini Cylinder
  - MIJ: Stroke adjustable Mini Cylinder
- Bore

| | |
|---|---|
| Φ8 | Φ20 |
| Φ10 | Φ25 |
| Φ12 | Φ32 |
| Φ16 | Φ40 |

- Stroke
- Magnet code
  - Blank : without magnet
  - S : with magnet

## Symbol:

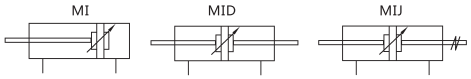

MI

## Product feature:

1. Accord with ISO6432 standard( Φ8~ Φ25).
2. The front and rear covers with fixed bumper can reduce the reversing impact of cylinder.
3. Various rear cover forms makes cylinder installation more convenient.
4. The front and rear covers and stainless steel cylinder body adopt riveting roll package structure with reliable connection.
5. Stainless steel piston rod and cylinder body help cylinder adapt to general corrosive working environment.
6. Various standard cylinders and installing accessories are optional for customers.

## Inner structure drawing:

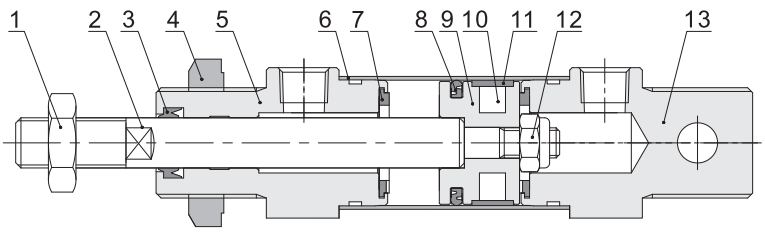


| Number | Name | Number | Name |
|---|---|---|---|
| 1 | Hexagonal nut | 8 | Sealing ring |
| 2 | Piston rod | 9 | Piston |
| 3 | Dustproof sealing ring | 10 | Magnet |
| 4 | Hexagonal nut | 11 | Wearing ring |
| 5 | Front cover | 12 | Hexagonal nut |
| 6 | Cylinder barrel | 13 | Rear cover |
| 7 | Anti-collision gasket | | |

# ISO6432 Standard Mini Cylinder

## Dimension(mm):

### MI Standard Dimension

■ Φ8~Φ40

CA type

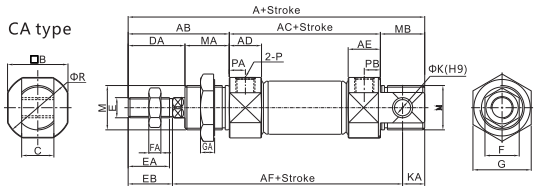


CB type

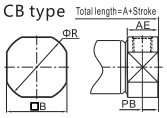


R type

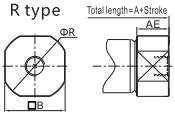


CM type

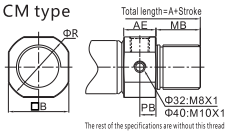


| Bore/Symbol | A | | | | AB | AC | AD | AE | | AF | B | C | D | DA | E |
|---|---|---|---|---|---|---|---|---|---|---|---|---|---|---|---|
| Rear cover | CA | U | R | CM | | | | CA | U/R/CM | | | | | | |
| 8 | 86 | 74 | - | - | 28 | 46 | 11.5 | 9.5 | 9.5 | 64 | 15 | 8 | 4 | 16 | M4×0.7 |
| 10 | 86 | 74 | - | - | 28 | 46 | 11.5 | 9.5 | 9.5 | 64 | 15 | 8 | 4 | 16 | M4×0.7 |
| 12 | 105 | 88 | - | - | 38 | 50 | 12.5 | 10.5 | 10.5 | 75 | 18 | 12 | 6 | 21 | M6×1 |
| 16 | 111 | 94 | 94 | 111 | 38 | 56 | 12.5 | 10.5 | 10.5 | 82 | 20 | 12 | 6 | 21 | M6×1 |
| 20 | 126 | 106 | 106 | 126 | 44 | 62 | 14.5 | 14.5 | 14.5 | 95 | 25 | 16 | 8 | 24 | M8×1.25 |
| 25 | 137 | 114.5 | 115 | 137 | 50 | 65 | 16 | 16 | 16 | 104 | 30 | 16 | 10 | 28 | M10×1.25 |
| 32 | - | 125 | 126 | 140 | 58 | - | 16.5 | - | 16.5 | - | 34.5 | - | 12 | 28 | M10×1.25 |
| 40 | - | 158 | 158 | 174 | 69 | - | 22 | - | 22 | - | 42.5 | - | 16 | 34 | M12×1.25 |

| Bore/Symbol | EA | EB | F | FA | G | GA | H | K | KA | M | MA | MB | P | PA | PB | | R |
|---|---|---|---|---|---|---|---|---|---|---|---|---|---|---|---|---|---|
| Rear cover | | | | | | | | | | | | | | | CA | U/CM | |
| 8 | 10.5 | 12 | 7 | 2.2 | 17 | 6 | - | 4 | 10 | M12×1.25 | 12 | 12 | M5×0.8 | 7 | 5 | 5 | 17 |
| 10 | 10.5 | 12 | 7 | 2.2 | 17 | 6 | - | 4 | 10 | M12×1.25 | 12 | 12 | M5×0.8 | 7 | 5 | 5 | 17 |
| 12 | 14 | 16 | 10 | 5 | 22 | 6 | 5(two sections) | 6 | 14 | M16×1.5 | 17 | 17 | M5×0.8 | 8 | 6 | 6 | 20 |
| 16 | 14.5 | 16 | 10 | 5 | 22 | 6 | 5(two sections) | 6 | 13 | M16×1.5 | 17 | 17 | M5×0.8 | 8 | 6 | 6 | 22 |
| 20 | 18 | 20 | 12 | 6 | 29 | 7 | 6(two sections) | 8 | 11 | M22×1.5 | 20 | 20 | PT1/8" | 7.5 | 7.5 | 7.5 | 29 |
| 25 | 20.5 | 22 | 17 | 6 | 29 | 7 | 8(four sections) | 8 | 11 | M22×1.5 | 22 | 22 | PT1/8" | 8 | 8 | 8 | 33.5 |
| 32 | 17.5 | 20 | 17 | 6 | 36 | 7 | 10(four sections) | - | - | M30×1.5 | 30 | 14 | PT1/8" | 9 | - | 9 | 37.5 |
| 40 | 21 | 24 | 17 | 7 | 46 | 8 | 14(four sections) | - | - | M38×1.5 | 35 | 16 | PT1/4" | 12 | - | 12 | 46.5 |

Notes:With or without magnet, the dimensions are the same..

### MID Standard Dimension

■ Φ8~Φ40

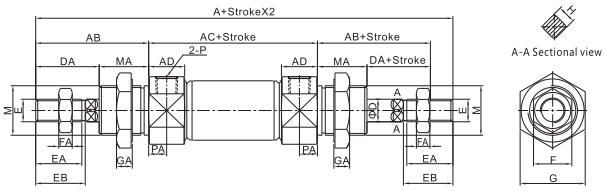


### MIJ Standard Dimension

■ Φ8~Φ40

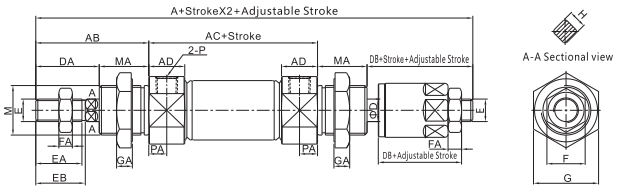


| Bore/Symbol | A | | AB | AC | AD | D | DA | DB | E | EA | EB |
|---|---|---|---|---|---|---|---|---|---|---|---|
| Rear cover | MID | MIJ | | | | | | | | | |
| 8 | 104 | 103 | 28 | 48 | 11.5 | 4 | 16 | 15 | M4×0.7 | 10.5 | 12 |
| 10 | 104 | 103 | 28 | 48 | 11.5 | 4 | 16 | 15 | M4×0.7 | 10.5 | 12 |
| 12 | 128 | 128 | 38 | 52 | 12.5 | 6 | 21 | 21 | M6×1 | 14 | 16 |
| 16 | 134 | 134 | 38 | 58 | 12.5 | 6 | 21 | 21 | M6×1 | 14.5 | 16 |
| 20 | 150 | 151 | 44 | 62 | 14.5 | 8 | 24 | 25 | M8×1.25 | 18 | 20 |
| 25 | 165 | 164 | 50 | 65 | 16 | 10 | 28 | 27 | M10×1.25 | 20 | 22 |
| 32 | 184 | 183 | 58 | 68 | 16.5 | 12 | 28 | 27 | M10×1.25 | 17.5 | 20 |
| 40 | 227 | 221 | 69 | 89 | 22 | 16 | 34 | 28 | M12×1.25 | 21 | 24 |

| Bore/Symbol | F | FA | G | GA | H | M | MA | P | PA |
|---|---|---|---|---|---|---|---|---|---|
| 8 | 7 | 2.2 | 17 | 6 | - | M12×1.25 | 12 | M5×0.8 | 7 |
| 10 | 7 | 2.2 | 17 | 6 | - | M12×1.25 | 12 | M5×0.8 | 7 |
| 12 | 10 | 5 | 22 | 6 | 5(two sections) | M16×1.5 | 17 | M5×0.8 | 8 |
| 16 | 10 | 5 | 22 | 6 | 5(two sections) | M16×1.5 | 17 | M5×0.8 | 8 |
| 20 | 12 | 6 | 29 | 7 | 6(two sections) | M22×1.5 | 20 | PT1/8" | 7.5 |
| 25 | 17 | 6 | 29 | 7 | 8(four sections) | M22×1.5 | 22 | PT1/8" | 8 |
| 32 | 17 | 6 | 36 | 7 | 10(four sections) | M30×1.5 | 30 | PT1/8" | 9 |
| 40 | 17 | 7 | 46 | 8 | 14(four sections) | M38×1.5 | 35 | PT1/4" | 12 |

Notes:With or without magnet, the dimensions are the same..

# ISO6432 Standard Mini Cylinder

## Specification:

| Type | 16 | 20 | 25 | 32 | 40 |
|---|---|---|---|---|---|
| Motion | Double acting | | | | |
| Series | MA, MAD, MAJ | | | | |
| Fluid | Compressed air | | | | |
| Working pressure range (MPa) | 0.1~1 | | | | |
| Operating speed(mm/sec) | 50~800 | | | | |
| Ambient temperature(℃) | -20~80 | | | | |
| Cushion | Adjustable cushion at both ends | | | | |
| Port size (G) | M5×0.8 | 1/8" | | | |

## How to order:

**MA 20×50 S**

- Specification
  - MA: Standard Mini Cylinder
  - MAD: Double axial Mini Cylinder
  - MAJ: Stroke adjustable Mini Cylinder
- Bore
  - Φ16
  - Φ20
  - Φ25
  - Φ32
  - Φ40
- Stroke
- Magnet code
  - Blank : without magnet
  - S : with magnet

## Symbol:

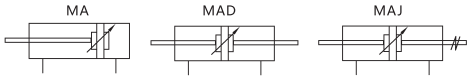

MA

## Product feature:

1.Execute the enterprise standards.
2.The piston seal adopts special two-way sealing structure with compact size and oil storing function.
3.The front and rear covers with fixed bumper can reduce the reversing impact of cylinder.
4.Various rear cover forms makes cylinder installation more convenient.
5.The front and rear covers and stainless steel cylinder body adopt riveting roll package structure with reliable connection.
6.The cylinder body adopts high precision stainless steel tube with high strength and corrosion resistance.
7.Various standard cylinders and installing accessories are optional for customers.

## Inner structure drawing:

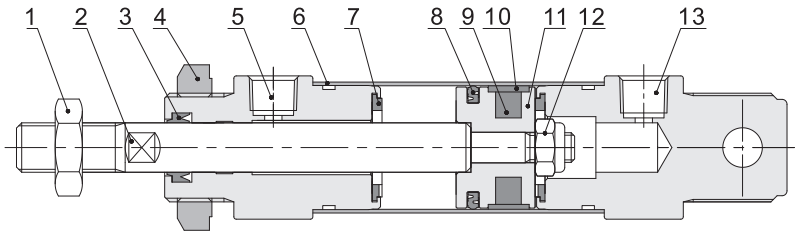


| Number | Name | Number | Name |
|---|---|---|---|
| 1 | Hexagonal nut | 8 | Sealing Ring |
| 2 | Piston rod | 9 | Piston |
| 3 | Dustproof sealing ring | 10 | Magnet |
| 4 | Hexagonal nut | 11 | Wearing ring |
| 5 | Front cover | 12 | Hexagonal nut |
| 6 | Cylinder barrel | 13 | Rear cover |
| 7 | Anti-collision gasket | | |

# ISO6432 Standard Mini Cylinder

## Dimension(mm):

### MA Standard Dimension

■ Φ16~Φ40

CA type

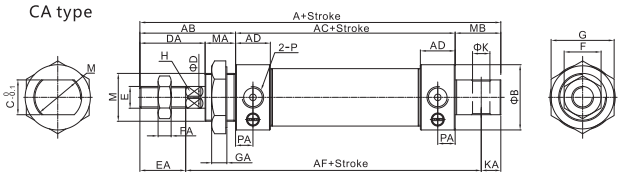


CM type

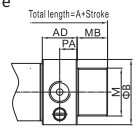


U type

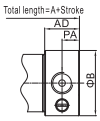


| Bore/Symbol | A | | | AB | AC | AD | AF | B | C | D | DA | DA | EA |
|---|---|---|---|---|---|---|---|---|---|---|---|---|---|
| Rear cover | CM | CA | U | | | | | | | | | | |
| 16 | 114 | 114 | 98 | 38 | 60 | 10 | 91 | 21 | 12 | 6 | 22 | M6×1.0 | 16 |
| 20 | 137 | 128 | 116 | 40 | 76 | 16 | 108 | 27 | 16 | 8 | 28 | M8×1.25 | 20 |
| 25 | 141 | 134 | 120 | 44 | 76 | 16 | 110 | 30 | 16 | 10 | 30 | M10×1.25 | 22 |
| 32 | 147 | 134 | 120 | 44 | 76 | 16 | 113 | 35 | 16 | 12 | 30 | M10×1.25 | 22 |
| 40 | 149 | 136 | 122 | 46 | 76 | 16.5 | 113 | 41.5 | 20 | 16 | 32 | M10×1.25 | 24 |

| Bore/Symbol | F | FA | G | GA | H | K | KA | M | MA | MB | | P | PA |
|---|---|---|---|---|---|---|---|---|---|---|---|---|---|
| Rear cover | | | | | | | | | | CA | CM | | |
| 16 | 10 | 5 | 22 | 6 | 5 | 6 | 9 | M16×1.5 | 16 | 16 | 16 | M5×0.8 | 5 |
| 20 | 12 | 6 | 29 | 7 | 6 | 8 | 12 | M22×1.5 | 12 | 21 | 12 | PT1/8" | 8 |
| 25 | 17 | 6 | 29 | 7 | 8 | 8 | 12 | M22×1.5 | 14 | 21 | 14 | PT1/8" | 8 |
| 32 | 17 | 6 | 32 | 8 | 10 | 10 | 15 | M24×2.0 | 14 | 27 | 14 | PT1/8" | 8 |
| 40 | 17 | 7 | 41 | 9 | 14 | 12 | 15 | M30×2.0 | 14 | 27 | 14 | PT1/8" | 8 |

### MAD Standard Dimension

■ Φ16~Φ40

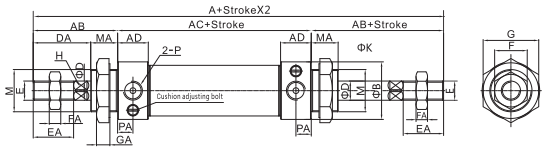


| Bore/Symbol | A | AB | AC | AD | B | D | DA | E | EA |
|---|---|---|---|---|---|---|---|---|---|
| 16 | 136 | 38 | 60 | 10 | 21 | 6 | 22 | M6×1.0 | 16 |
| 20 | 156 | 40 | 76 | 16 | 27 | 8 | 28 | M8×1.25 | 20 |
| 25 | 164 | 44 | 76 | 16 | 30 | 10 | 30 | M10×1.25 | 22 |
| 32 | 164 | 44 | 76 | 16 | 35 | 12 | 30 | M10×1.25 | 22 |
| 40 | 168 | 46 | 76 | 16.5 | 41.5 | 16 | 32 | M12×1.25 | 24 |

| Bore/Symbol | F | FA | G | GA | H | M | MA | P | PA |
|---|---|---|---|---|---|---|---|---|---|
| 16 | 10 | 5 | 22 | 6 | 5 | M16×1.5 | 16 | M5×0.8 | 5 |
| 20 | 12 | 6 | 29 | 7 | 6 | M22×1.5 | 12 | PT1/8" | 8 |
| 25 | 17 | 6 | 29 | 7 | 8 | M22×1.5 | 14 | PT1/8" | 8 |
| 32 | 17 | 6 | 32 | 8 | 10 | M24×2.0 | 14 | PT1/8" | 8 |
| 40 | 17 | 7 | 41 | 9 | 14 | M30×2.0 | 20 | PT1/8" | 8 |

### MAJ Standard Dimension

■ Φ16~Φ40

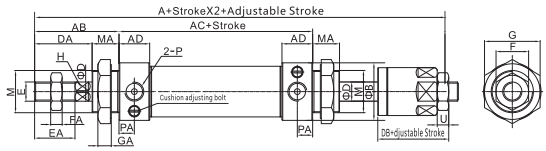


| Bore/Symbol | A | AB | AC | AD | B | D | DA | DB | E | EA | F | FA |
|---|---|---|---|---|---|---|---|---|---|---|---|---|
| 16 | 135 | 38 | 60 | 10 | 21 | 6 | 22 | 21 | M6×1.0 | 16 | 10 | 5 |
| 20 | 153 | 40 | 76 | 16 | 27 | 8 | 28 | 25 | M8×1.25 | 20 | 12 | 6 |
| 25 | 161 | 44 | 76 | 16 | 30 | 10 | 30 | 27 | M10×1.25 | 22 | 17 | 6 |
| 32 | 161 | 44 | 76 | 16 | 35 | 12 | 30 | 27 | M10×1.25 | 22 | 17 | 6 |
| 40 | 164 | 46 | 76 | 16.5 | 41.5 | 16 | 32 | 28 | M12×1.25 | 24 | 17 | 7 |

| Bore/Symbol | H | M | MA | P | PA | G | GA | T | U |
|---|---|---|---|---|---|---|---|---|---|
| 16 | 5 | M16×1.5 | 16 | M5×0.8 | 5 | 22 | 6 | M6×1.0 | 5 |
| 20 | 6 | M22×1.5 | 12 | PT1/8" | 8 | 29 | 7 | M8×1.25 | 6 |
| 25 | 8 | M22×1.5 | 14 | PT1/8" | 8 | 29 | 7 | M10×1.25 | 6 |
| 32 | 10 | M24×2.0 | 14 | PT1/8" | 8 | 32 | 8 | M10×1.25 | 6 |
| 40 | 14 | M30×2.0 | 14 | PT1/8" | 8 | 41 | 9 | M12×1.25 | 7 |

# ISO6432 Standard Mini Cylinder

## Specification:

| Type | 20 | 25 | 32 | 40 |
|---|---|---|---|---|
| Motion | Double acting | | | |
| Series | MG, MGD | | | |
| Fluid | Compressed air | | | |
| Working pressure range (MPa) | 0.1~1 | | | |
| Operating speed(mm/sec) | 50~800 | | | |
| Ambient temperature(℃) | -20~80 | | | |
| Cushion | Adjustable cushion at both ends | | | |
| Port size (G) | 1/8" | | | |

## How to order:

**MG 20 x 100 S**

- Specification
  - MG: Standard Mini Cylinder
  - MGD: Double axial Mini Cylinder
- Bore
  - Φ20
  - Φ25
  - Φ32
  - Φ40
- Stroke
- Magnet code
  - Blank : without magnet
  - S : with magnet

## Symbol:

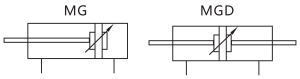

MG

## Product feature:

1. Execute JIS standard.
2. The piston seal adopts special two-way sealing structure with compact size and oil storing function.
3. The front and rear covers with fixed bumper can reduce the reversing impact of cylinder.
4. The front and rear covers and stainless steel cylinder body adopt riveting roll package structure with reliable connection.
5. The cylinder body adopts high precision stainless steel tube with high strength and corrosion resistance.
6. Various standard cylinders and installing accessories are optional for customers.

## Inner structure drawing:

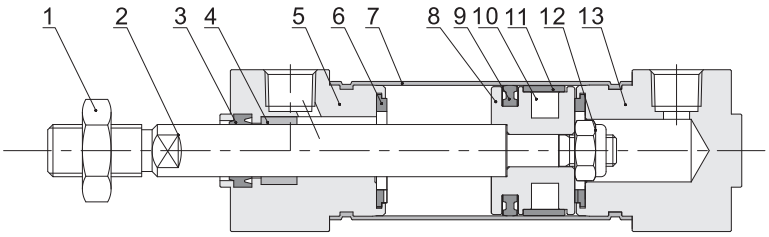


| Number | Name | Number | Name |
|---|---|---|---|
| 1 | Hexagonal nut | 8 | Sealing Ring |
| 2 | Piston rod | 9 | Piston |
| 3 | Dustproof sealing ring | 10 | Magnet |
| 4 | Hexagonal nut | 11 | Wearing ring |
| 5 | Front cover | 12 | Hexagonal nut |
| 6 | Cylinder barrel | 13 | Rear cover |
| 7 | Anti-collision gasket | | |

# ISO6432 Standard Mini Cylinder

## Dimension(mm):

### MG Standard Dimension

■ Φ20~Φ40

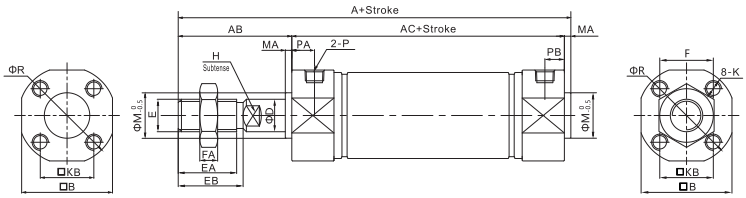


| Bore/Symbol | Standard stroke range | Long stroke range | A | AB | AC | B | D | E | EA | EB | F |
|---|---|---|---|---|---|---|---|---|---|---|---|
| 20 | ≤200 | 201~500 | 106/114 | 35 | 69/77 | 24 | 8 | M8×1.25 | 15.5 | 18 | 13 |
| 25 | ≤300 | 301~500 | 111/119 | 40 | 69/77 | 29 | 10 | M10×1.25 | 19.5 | 22 | 17 |
| 32 | ≤300 | 301~500 | 113/121 | 40 | 71/79 | 35.5 | 12 | M10×1.25 | 19.5 | 22 | 17 |
| 40 | ≤300 | 301~500 | 130/139 | 50 | 78/87 | 44 | 16 | M14×1.5 | 27 | 30 | 19 |

| Bore/Symbol | FA | H | K | KB | M | MA | P | PA | PB | R | T |
|---|---|---|---|---|---|---|---|---|---|---|---|
| 20 | 5 | 6 | M4×0.7 deep 7 | 14 | 12 | 2 | PT1/8" | 12/15 | 8 | 26.5 | 22.5 |
| 25 | 6 | 8 | M5×0.8 deep 7.5 | 16.5 | 14 | 2 | PT1/8" | 12.5/15 | 9 | 31.5 | 24.5 |
| 32 | 6 | 10 | M5×0.8 deep 7.5 | 20 | 18 | 2 | PT1/8" | 13/15 | 10.5 | 38.5 | 30.5 |
| 40 | 8 | 14 | M6×1.0 deep 12 | 26 | 25 | 2 | PT1/8" | 13/14 | 12 | 47.5 | 35 |

Notes:With or without magnet, the dimensions are the same..

### MGD Standard Dimension

■ Φ20~Φ40

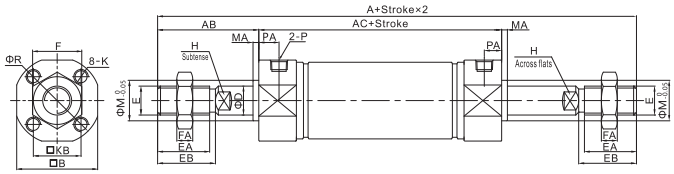


| Bore/Symbol | A | AC | AB | B | D | E | EA | EB | F | FA |
|---|---|---|---|---|---|---|---|---|---|---|
| 20 | 147 | 77 | 35 | 24 | 8 | M8×1.25 | 15.5 | 18 | 13 | 5 |
| 25 | 157 | 77 | 40 | 29 | 10 | M10×1.25 | 19.5 | 22 | 17 | 6 |
| 32 | 159 | 79 | 40 | 35.5 | 12 | M10×1.25 | 19.5 | 22 | 17 | 6 |
| 40 | 187 | 87 | 50 | 44 | 16 | M14×1.5 | 27 | 30 | 19 | 8 |

| Bore/Symbol | H | K | KB | M | MA | P | PA | R | T |
|---|---|---|---|---|---|---|---|---|---|
| 20 | 6 | M4×0.7 deep 7 | 14 | 12 | 2 | PT1/8" | 12 | 26.5 | 22.5 |
| 25 | 8 | M5×0.8 deep 7.5 | 16.5 | 14 | 2 | PT1/8" | 12.5 | 31.5 | 24.5 |
| 32 | 10 | M5×0.8 deep 7.5 | 20 | 18 | 2 | PT1/8" | 13 | 38.5 | 30.5 |
| 40 | 14 | M6×1.0 deep 12 | 26 | 25 | 2 | PT1/8" | 13 | 47.5 | 35 |

Notes:With or without magnet, the dimensions are the same..

# ISO6432 Standard Mini Cylinder

## Specification:

| Type | 20 | 25 | 32 | 40 |
|---|---|---|---|---|
| Motion | Double acting | | | |
| Series | MF, MFD, MFJ | | | |
| Fluid | Compressed air | | | |
| Working pressure range (MPa) | 0.1~1 | | | |
| Operating speed(mm/sec) | 50~800 | | | |
| Ambient temperature(℃) | -20~80 | | | |
| Cushion | Bumper | | | |
| Port size (G) | 1/8" | | | 1/4" |

## How to order:

**MF 32×50 S**

- Specification
  - MF: Standard Mini Cylinder
  - MFD: Double axial Mini Cylinder
  - MFJ: Double adjustable Mini Cylinder
- Bore
  - Φ20
  - Φ25
  - Φ32
  - Φ40
- Stroke
- Magnet code
  - Blank : without magnet
  - S : with magnet

## Symbol:

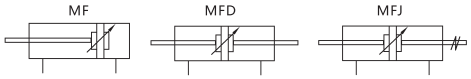

MF

## Product feature:

1. Execute JIS standard.
2. The piston seal adopts special two–way sealing structure with compact size and oil storing function.
3. The front and rear covers with fixed bumper can reduce the reversing impact of cylinder.
4. Various rear cover forms makes cylinder installation more convenient.
5. The front and rear covers and stainless steel cylinder body adopt riveting roll package structure with reliable connection.
6. The cylinder body adopts high precision stainless steel tube with high strength and corrosion resistance.
7. Compared with the same bore and stroke cylinders, the length of MF series cylinder is shorter than that of ISO6432 standard cylinder.
8. Various standard cylinders and installing accessories are optional for customers.

## Inner structure drawing:

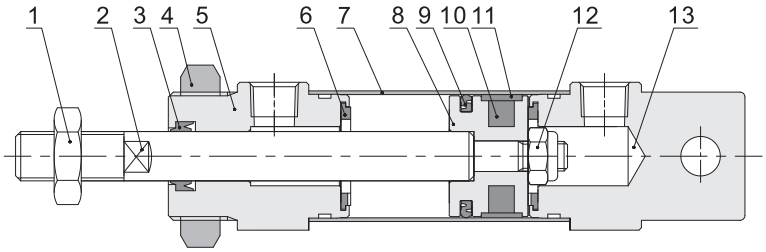


| Number | Name | Number | Name |
|---|---|---|---|
| 1 | Hexagonal nut | 8 | Sealing Ring |
| 2 | Piston rod | 9 | Piston |
| 3 | Dustproof sealing ring | 10 | Magnet |
| 4 | Hexagonal nut | 11 | Wearing ring |
| 5 | Front cover | 12 | Hexagonal nut |
| 6 | Cylinder barrel | 13 | Rear cover |
| 7 | Anti-collision gasket | | |

# ISO6432 Standard Mini Cylinder

## Dimension(mm):

### MF Standard Dimension

■ Φ20~Φ40

CM type

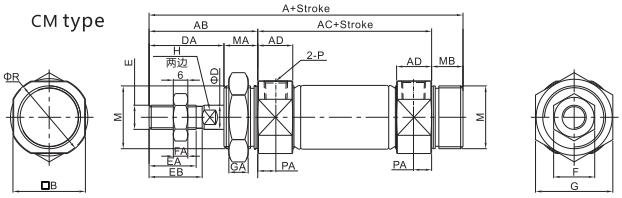


CA type

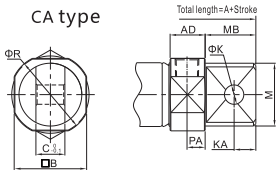


U type

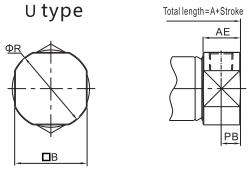


| Bore/Symbol | A | | | AB | AC | AD | AE | B | C | M | | MA | MB | | D |
|---|---|---|---|---|---|---|---|---|---|---|---|---|---|---|---|
| Rear cover | CM | CA | U | | | | | | | CM | CA | | CA | CM | |
| 20 | 116 | 124 | 103 | 41 | 62 | 14.5 | 14.5 | 25 | 12 | M20×1.5 | 20 | 14 | 21 | 13 | 8 |
| 25 | 120 | 128 | 108 | 45 | 62 | 14.5 | 15.5 | 30 | 12 | M26×1.5 | 26 | 14 | 21 | 13 | 10 |
| 32 | 122 | 136 | 110 | 45 | 64 | 14.5 | 15.5 | 34.5 | 20 | M26×1.5 | 26 | 14 | 27 | 13 | 12 |
| 40 | 154 | 165 | 138.5 | 50 | 88 | 21.5 | 22 | 42.5 | 20 | M32×2 | 32 | 16 | 27 | 16 | 16 |

| Bore/Symbol | DA | E | EA | EB | F | FA | G | GA | H | K | KA | P | PA | PB | R |
|---|---|---|---|---|---|---|---|---|---|---|---|---|---|---|---|
| 20 | 27 | M8×1.25 | 15.5 | 18 | 13 | 5 | 26 | 8 | 6 | 8 | 9 | PT1/8" | 7.5 | 7.5 | 29 |
| 25 | 31 | M10×1.25 | 19.5 | 22 | 17 | 6 | 32 | 8 | 8 | 8 | 9 | PT1/8" | 7.5 | 8 | 33.5 |
| 32 | 31 | M10×1.25 | 19.5 | 22 | 17 | 6 | 32 | 8 | 10 | 10 | 12 | PT1/8" | 7.5 | 8 | 37.5 |
| 40 | 34 | M14×1.5 | 21 | 24 | 19 | 8 | 41 | 10 | 14 | 10 | 12 | PT1/4" | 11 | 11.5 | 46.5 |

Notes:With or without magnet, the dimensions are the same..

### MFD Standard Dimension

■ Φ20~Φ40

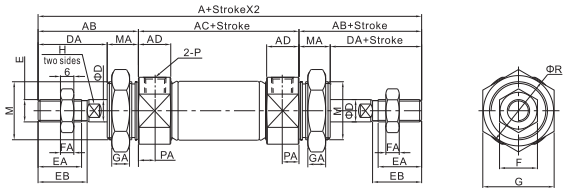


| Bore/Symbol | A | AB | AC | AD | D | DA | DB | E | EA | EB | F | FA |
|---|---|---|---|---|---|---|---|---|---|---|---|---|
| 20 | 144 | 41 | 62 | 14.5 | 8 | 27 | 24 | M8×1.25 | 15.5 | 18 | 13 | 5 |
| 25 | 152 | 45 | 62 | 14.5 | 10 | 31 | 27 | M10×1.25 | 19.5 | 22 | 17 | 6 |
| 32 | 154 | 45 | 64 | 14.5 | 12 | 31 | 27 | M10×1.25 | 19.5 | 22 | 17 | 6 |
| 40 | 188 | 50 | 88 | 21.5 | 16 | 34 | 28 | M14×1.5 | 21 | 24 | 19 | 8 |

| Bore/Symbol | G | GA | H | M | MA | P | PA | R | T | U |
|---|---|---|---|---|---|---|---|---|---|---|
| 20 | 26 | 8 | 6 | M20×1.5 | 14 | PT1/8" | 7.5 | 29 | M8×1.25 | 5 |
| 25 | 32 | 8 | 8 | M26×1.5 | 14 | PT1/8" | 7.5 | 33.5 | M10×1.25 | 6 |
| 32 | 32 | 8 | 10 | M26×1.5 | 14 | PT1/8" | 7.5 | 37.5 | M10×1.25 | 6 |
| 40 | 41 | 10 | 14 | M32×2 | 16 | PT1/4" | 11 | 46.5 | M12×1.25 | 7 |

### MFJ Standard Dimension

■ Φ20~Φ40

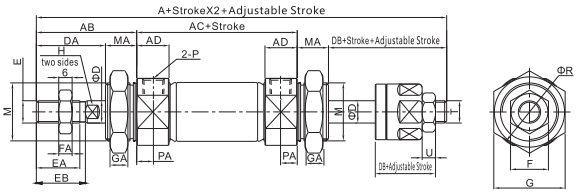


| Bore/Symbol | A | AB | AC | AD | D | DA | DB | E | EA | EB | F | FA |
|---|---|---|---|---|---|---|---|---|---|---|---|---|
| 20 | 141 | 41 | 62 | 14.5 | 8 | 27 | 24 | M8×1.25 | 15.5 | 18 | 13 | 5 |
| 25 | 148 | 45 | 62 | 14.5 | 10 | 31 | 27 | M10×1.25 | 19.5 | 22 | 17 | 6 |
| 32 | 150 | 45 | 64 | 14.5 | 12 | 31 | 27 | M10×1.25 | 19.5 | 22 | 17 | 6 |
| 40 | 182 | 50 | 88 | 21.5 | 16 | 34 | 28 | M14×1.5 | 21 | 24 | 19 | 8 |

| Bore/Symbol | G | GA | H | M | MA | P | PA | R | T | U |
|---|---|---|---|---|---|---|---|---|---|---|
| 20 | 26 | 8 | 6 | M20×1.5 | 14 | PT1/8" | 7.5 | 29 | M8×1.25 | 5 |
| 25 | 32 | 8 | 8 | M26×1.5 | 14 | PT1/8" | 7.5 | 33.5 | M10×1.25 | 6 |
| 32 | 32 | 8 | 10 | M26×1.5 | 14 | PT1/8" | 7.5 | 37.5 | M10×1.25 | 6 |
| 40 | 41 | 10 | 14 | M32×2 | 16 | PT1/4" | 11 | 46.5 | M12×1.25 | 7 |

Notes:With or without magnet, the dimensions are the same..

# Aluminum Mini Cylinder

## Specification:

| Type | 16 | 20 | 25 | 32 | 40 |
|---|---|---|---|---|---|
| Motion | Double acting | | | | |
| Series | MAL,MALD,MALJ | | | | |
| Fluid | Compressed air | | | | |
| Working pressure range (MPa) | 0.1~1 | | | | |
| Operating speed(mm/sec) | 50~500 | | | | |
| Ambient temperature(℃) | -10~70 | | | | |
| Cushion | Bumper | | | | |
| Port size (G) | M5 | 1/8" | | | 1/4" |

## How to order:

**MAL 20 × 100 CA LB S**

Specification
- MAL: Standard Mini Cylinder
- MALD: Double axial Mini Cylinder
- MALJ: Stroke adjustable Mini Cylinder

Bore
- Φ16
- Φ20
- Φ25
- Φ32
- Φ40

Stroke

Rear cover
- Blank: Fishtail
- U: Flat tail
- CM: Rounded tail

Mounting type
- Blank(Standard)
- LB
- FA/FB

Magnet code
- S1:with magnet + 1pc magnet switch
- S2:with magnet + 2pc magnet switch
- S3:heat resisting seal ring, max temp.150℃
- S4:acid resisting piston rod

## Symbol:

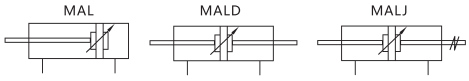


## Product feature:

1. Adopt imported aluminum tube,light,precise, friction & corrosion endurable.
2. Use imported non–lubrication oil seal,fits for high speed movement.
3. Has aluminum covers,CNC machined,surface anodized,better anti–corrosion.
4. Has non–lubrication bearing,no need maintenance for long time working with longer life time than usual one.
5. Magnet in piston,whole series can be attached with sensor switch



## Inner structure drawing:

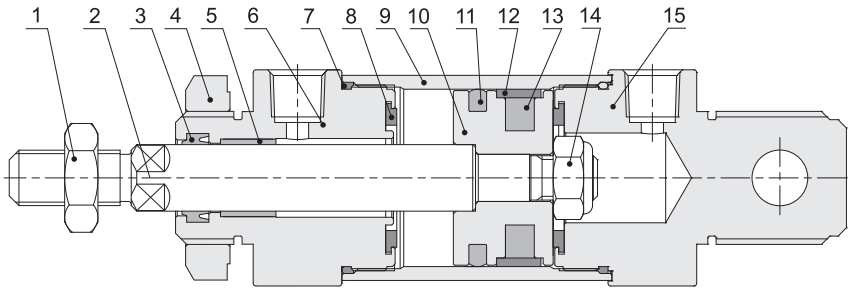


| Number | Name | Number | Name |
|---|---|---|---|
| 1 | Hexagonal nut | 9 | Cylinder barrel |
| 2 | Piston rod | 10 | Piston |
| 3 | Dustproof sealing ring | 11 | PZ ring |
| 4 | Hexagonal nut | 12 | Wearing ring |
| 5 | Composite bearing | 13 | Magnet |
| 6 | Front cover | 14 | Hexagonal nylon locknut |
| 7 | O-ring | 15 | Rear cover |
| 8 | Fenders | | |

# Aluminum Mini Cylinder

## Dimension(mm):

### Fishtail type

Φ16~Φ40

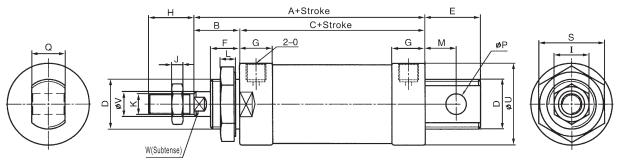


| Bore/Symbol | A | B | C | D | E | F | G | H | I | J |
|---|---|---|---|---|---|---|---|---|---|---|
| 16 | 75.6 | 20 | 55.6 | M16×1.5 | 14 | 12 | 11 | 17 | 10 | 5 |
| 20 | 90 | 20 | 70 | M22×1.5 | 21 | 12 | 16 | 20 | 12 | 6 |
| 25 | 92 | 22 | 70 | M22×1.5 | 21 | 14 | 16 | 22 | 17 | 6 |
| 32 | 92 | 22 | 70 | M24×1.5 | 27 | 14 | 16 | 22 | 17 | 6 |
| 40 | 114 | 22 | 92 | M30×1.5 | 27 | 14 | 22 | 24 | 17 | 7 |

| Bore/Symbol | K | L | M | O | P | Q | S | U | V | W |
|---|---|---|---|---|---|---|---|---|---|---|
| 16 | M6 | 7 | 5 | M5 | 6 | 12 | 24 | 22 | 6 | - |
| 20 | M8×1.25 | 12 | 3 | PT1/8" | 8 | 16 | 27 | 27 | 8 | 6 |
| 25 | M10×1.25 | 12 | 12 | PT1/8" | 8 | 16 | 29 | 32 | 10 | 8 |
| 32 | M10×1.25 | 15 | 14 | PT1/8" | 10 | 16 | 39.5 | 39 | 12 | 10 |
| 40 | M12×1.25 | 15 | 16 | PT1/4" | 12 | 20 | 49.5 | 47 | 16 | 14 |

### Flatl type

Φ16~Φ40

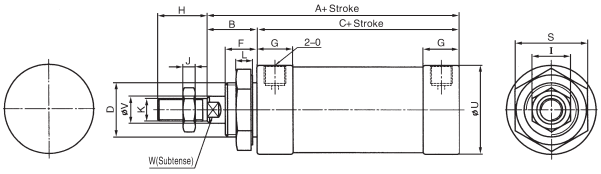


| Bore/Symbol | A | B | C | D | F | G | H | I | J |
|---|---|---|---|---|---|---|---|---|---|
| 16 | 75.6 | 20 | 55.6 | M16×1.5 | 12 | 11 | 17 | 10 | 5 |
| 20 | 90 | 20 | 70 | M22×1.5 | 12 | 16 | 20 | 12 | 6 |
| 25 | 92 | 22 | 70 | M22×1.5 | 14 | 16 | 22 | 17 | 6 |
| 32 | 92 | 22 | 70 | M24×1.5 | 14 | 16 | 22 | 17 | 6 |
| 40 | 114 | 22 | 92 | M30×1.5 | 14 | 22 | 24 | 17 | 7 |

| Bore/Symbol | K | L | O | S | U | V | W |
|---|---|---|---|---|---|---|---|
| 16 | M6 | 7 | M5 | 24 | 22 | 6 | - |
| 20 | M8×1.25 | 12 | PT1/8" | 29 | 27 | 8 | 6 |
| 25 | M10×1.25 | 12 | PT1/8" | 29 | 32 | 10 | 8 |
| 32 | M10×1.25 | 15 | PT1/8" | 32 | 39 | 12 | 10 |
| 40 | M12×1.25 | 15 | PT1/4" | 41 | 47 | 16 | 14 |

### Rounded type

Φ16~Φ40

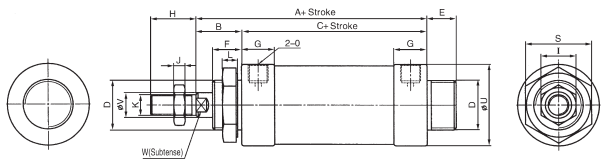


| Bore/Symbol | A | B | C | D | E | F | G | H | I | J |
|---|---|---|---|---|---|---|---|---|---|---|
| 16 | 75.6 | 20 | 55.6 | M16×1.5 | 14 | 2 | 11 | 17 | 10 | 5 |
| 20 | 90 | 20 | 70 | M22×1.5 | 21 | 12 | 16 | 20 | 12 | 6 |
| 25 | 92 | 22 | 70 | M22×1.5 | 21 | 14 | 16 | 22 | 17 | 6 |
| 32 | 92 | 22 | 70 | M24×1.5 | 27 | 14 | 16 | 22 | 17 | 6 |
| 40 | 114 | 22 | 92 | M30×1.5 | 27 | 14 | 22 | 24 | 17 | 7 |

| Bore/Symbol | K | L | O | S | U | V | W |
|---|---|---|---|---|---|---|---|
| 16 | M6 | 7 | M5 | 24 | 22 | 6 | - |
| 20 | M8×1.25 | 12 | PT1/8" | 29 | 27 | 8 | 6 |
| 25 | M10×1.25 | 12 | PT1/8" | 29 | 32 | 10 | 8 |
| 32 | M10×1.25 | 15 | PT1/8" | 32 | 39 | 12 | 10 |
| 40 | M12×1.25 | 15 | PT1/4" | 41 | 47 | 16 | 14 |

### MALD type

Φ16~Φ40

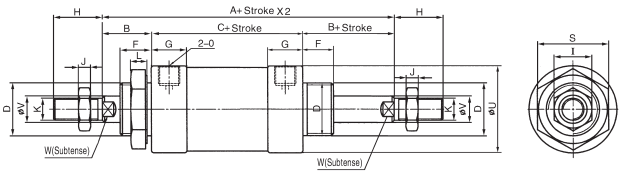


| Bore/Symbol | A | B | C | D | F | G | H | I | J |
|---|---|---|---|---|---|---|---|---|---|
| 16 | 95.6 | 20 | 55.6 | M16×1.5 | 12 | 11 | 17 | 10 | 5 |
| 20 | 110 | 20 | 70 | M22×1.5 | 12 | 16 | 20 | 12 | 6 |
| 25 | 116 | 22 | 70 | M22×1.5 | 14 | 16 | 22 | 17 | 6 |
| 32 | 114 | 22 | 70 | M24×1.5 | 14 | 16 | 22 | 17 | 6 |
| 40 | 136 | 22 | 92 | M30×1.5 | 14 | 22 | 24 | 17 | 7 |

| Bore/Symbol | K | L | O | S | U | V | W |
|---|---|---|---|---|---|---|---|
| 16 | M6 | 7 | M5 | 24 | 22 | 6 | - |
| 20 | M8×1.25 | 12 | PT1/8" | 29 | 27 | 8 | 6 |
| 25 | M10×1.25 | 12 | PT1/8" | 29 | 32 | 10 | 8 |
| 32 | M10×1.25 | 15 | PT1/8" | 32 | 39 | 12 | 10 |
| 40 | M12×1.25 | 15 | PT1/4" | 41 | 47 | 16 | 14 |

# Aluminum Mini Cylinder

## Dimension(mm):

### MALJ type

Φ16~Φ40

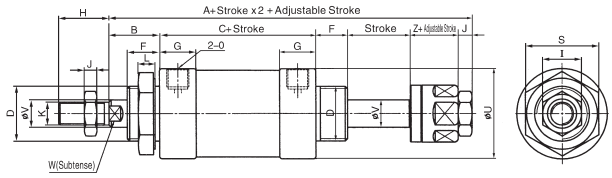


| Bore/Symbol | A | B | C | D | F | G | H | I | J |
|---|---|---|---|---|---|---|---|---|---|
| 16 | 111.6 | 20 | 55.6 | M16×1.5 | 12 | 11 | 17 | 10 | 5 |
| 20 | 127 | 20 | 70 | M22×1.5 | 12 | 16 | 20 | 12 | 6 |
| 25 | 133 | 22 | 70 | M22×1.5 | 14 | 16 | 22 | 17 | 6 |
| 32 | 133 | 22 | 70 | M24×1.5 | 14 | 16 | 22 | 17 | 6 |
| 40 | 156 | 22 | 92 | M30×2 | 14 | 22 | 24 | 17 | 7 |

| Bore/Symbol | K | L | O | S | U | V | W | Z |
|---|---|---|---|---|---|---|---|---|
| 16 | M6 | 7 | M5 | 24 | 22 | 6 | - | 19 |
| 20 | M8×1.25 | 12 | PT1/8" | 29 | 27 | 8 | 6 | 19 |
| 25 | M10×1.25 | 12 | PT1/8" | 29 | 32 | 10 | 8 | 21 |
| 32 | M10×1.25 | 15 | PT1/8" | 32 | 39 | 12 | 10 | 21 |
| 40 | M12×1.25 | 15 | PT1/4" | 41 | 47 | 16 | 14 | 21 |

### FA type

Φ16~Φ20

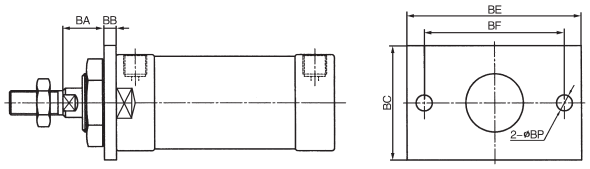


Φ32~Φ40

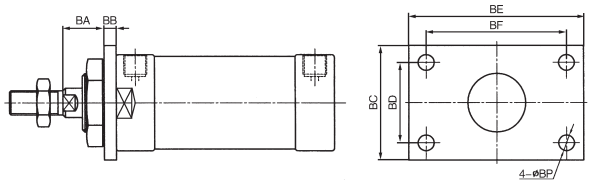


| Bore/Symbol | BA | BB | BC | BD | BE | BF | BP |
|---|---|---|---|---|---|---|---|
| 20 | 16 | 4 | 38 | - | 64 | 50 | 6.5 |
| 25 | 18 | 4 | 38 | - | 64 | 50 | 6.5 |
| 32 | 18 | 4 | 47 | 33 | 72 | 58 | 6.5 |
| 40 | 18 | 4 | 50 | 36 | 84 | 119 | 6.5 |

### LB type

Φ20~Φ40

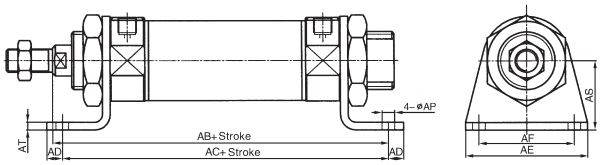


| Bore/Symbol | AB | AC | AD | AE | AF | AP | AS | AT |
|---|---|---|---|---|---|---|---|---|
| 20 | 105 | 100 | 8 | 54 | 40 | 6.5 | 25 | 3 |
| 25 | 107 | 100 | 8 | 54 | 40 | 6.5 | 25 | 3 |
| 32 | 117 | 120 | 8 | 59 | 45 | 6.5 | 32 | 4 |
| 40 | 139 | 142 | 8 | 64 | 50 | 6.5 | 36 | 4.5 |

# Aluminum Mini Cylinder(large bore)

## Specification:

| Type | 32 | 40 | 50 | 63 | 70 | 80 |
|---|---|---|---|---|---|---|
| Motion | Double acting | | | | | |
| Series | DAL | | | | | |
| Fluid | Compressed air | | | | | |
| Working pressure range (MPa) | 0.1~1 | | | | | |
| Port size(G) | 1/8" | | | | | |

## How to order:

**DAL 50 × 60 S**

- Specification: DAL: Aluminum Mini Cylinder
- Bore: Φ32, Φ40, Φ50, Φ63, Φ70, Φ80
- Stroke
- Magnet code:
  - S1:with magnet + 1pc magnet switch
  - S2:with magnet + 2pc magnet switch
  - S3:heat resisting seal ring, max temp.150℃
  - S4:acid resisting piston rod

## Symbol:

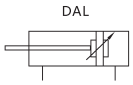


## Product feature:

1. 1/5 Shorter than ISO cylinder.
2. Seal with long life ,low friction.
3. Magnet in piston,whole series can be attached with sensor.

## Inner structure drawing:

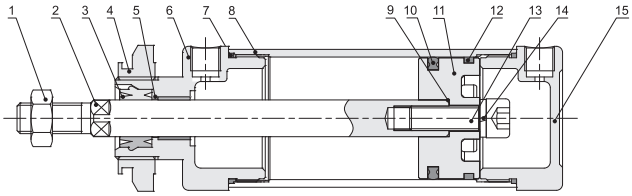


| Number | Name | Number | Name | Number | Name |
|---|---|---|---|---|---|
| 1 | Hexagonal nut | 6 | Front cover | 11 | Piston |
| 2 | Piston rod | 7 | O-ring | 12 | Wearing ring |
| 3 | EU Dustproof sealing ring | 8 | Cylinder barrel | 13 | Hexagon socket cap screws |
| 4 | Hexagonal nut | 9 | O-ring | 14 | Elastic washer |
| 5 | Composite bearing | 10 | C-ring | 15 | Rear cover |

## Dimension(mm):

Φ32~Φ80

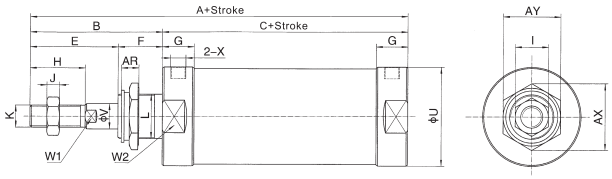


| Bore/Symbol | A | B | C | E | F | G | H | I | J |
|---|---|---|---|---|---|---|---|---|---|
| 32 | 114 | 43 | 71 | 26 | 17 | 16 | 23 | 17 | 6 |
| 40 | 128 | 54 | 74 | 32 | 22 | 15 | 24 | 17 | 6 |
| 50 | 139 | 56 | 83 | 34 | 22 | 15 | 24 | 17 | 6 |
| 63 | 151 | 69 | 82 | 41 | 28 | 16 | 31.5 | 22 | 8 |
| 70 | 152 | 70 | 82 | 42 | 28 | 16 | 30 | 22 | 8 |
| 80 | 175 | 80 | 95 | 52 | 28 | 20 | 35 | 22 | 8 |

| Bore/Symbol | K | L | V | X | W1 | W2 | AR | AX | AY |
|---|---|---|---|---|---|---|---|---|---|
| 32 | M10×1.5 | 24×2 | 12 | G1/8" | 10 | 35 | 7 | 37 | 32 |
| 40 | M10×1.5 | 27×2 | 12 | G1/8" | 10 | 45 | 12 | 47 | 41 |
| 50 | M10×1.5 | 30×2 | 12 | G1/8" | 10 | 52 | 12 | 53 | 46 |
| 63 | M14×2 | 36×2 | 16 | G1/8" | 14 | 68 | 13 | 60 | 52 |
| 70 | M14×2 | 40×2 | 16 | G1/8" | 14 | 74 | 13 | 60 | 52 |
| 80 | M14×2 | 40×2 | 16 | G1/8" | 14 | 84 | 13 | 60 | 52 |

# Round Line Cylinder

## Specification:

| Type | 20 | 25 | 32 | 40 | 50 | 63 | 80 | 100 |
|---|---|---|---|---|---|---|---|---|
| Motion | Double acting | | | | | | | |
| Series | CG1 | | | | | | | |
| Fluid | Compressed air | | | | | | | |
| Working pressure range (MPa) | 0.1~1 | | | | | | | |
| Operating speed(mm/sec) | 50~1000 | | | | | | 50~700 | |
| Ambient temperature(℃) | -10~60 | | | | | | | |
| Port size (G) | 1/8" | | | | 1/4" | | 3/8" | 1/2" |

## How to order:

**CG1 40 × 100 S**

- Specification: CG1: Round Line Cylinder
- Bore:

| | |
|---|---|
| Φ20 | Φ50 |
| Φ25 | Φ63 |
| Φ32 | Φ80 |
| Φ40 | Φ100 |

- Stroke
- Magnet code:
  - S1:with magnet + 1pc magnet switch
  - S2:with magnet + 2pc magnet switch
  - S3:heat resisting seal ring, max temp.150℃
  - S4:acid resisting piston rod

## Symbol:

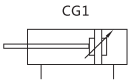


## Product feature:

CGI

1. CNC mechanically processed with high precision. Quality meet international standard.
2. Adopt imported none lubrication,long time service and no need lubrication maintenance.
3. Unique cushion technique makes smooth action.
4. May add the sensor equipment to easily control.

## Inner structure drawing:

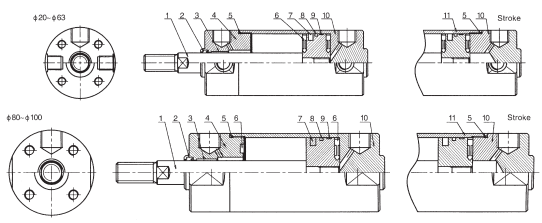


| Number | Name | Number | Name | Number | Name |
|---|---|---|---|---|---|
| 1 | Piston rod | 5 | O-ring | 9 | Wearing ring |
| 2 | Combemayional sealing ring | 6 | Fenders | 10 | Rear cover |
| 3 | Oil bearing | 7 | Magnet ring | 11 | Cylinder barrel |
| 4 | Front cover | 8 | C-ring | | |

## Dimension(mm):

Standard Dimension

■ Φ20~Φ100

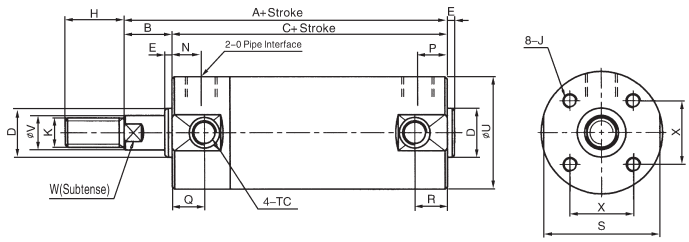


| Bore/Symbol | Bore(mm) | A | B | C | D | E | H | J | K |
|---|---|---|---|---|---|---|---|---|---|
| 20 | ~200 | 86 | 17 | 69 | 12 | 2 | 18 | M4×0.7deep7 | M8×1.25 |
| 25 | ~300 | 87 | 18 | 69 | 14 | 2 | 22 | M5×0.8deep7.5 | M10×1.25 |
| 32 | ~300 | 89 | 18 | 71 | 18 | 2 | 22 | M5×0.8deep8 | M10×1.25 |
| 40 | ~300 | 98 | 20 | 78 | 25 | 2 | 30 | M6×1deep12 | M14×1.5 |
| 50 | ~300 | 113 | 23 | 90 | 30 | 2 | 35 | M8×1.25deep16 | M18×1.5 |
| 63 | ~300 | 113 | 23 | 90 | 32 | 2 | 35 | M10×1.5deep16 | M18×1.5 |
| 80 | ~300 | 139 | 31 | 108 | 40 | 3 | 40 | M10×1.5deep22 | M22×1.5 |
| 100 | ~300 | 139 | 31 | 108 | 50 | 3 | 40 | M12×1.75deep22 | M22×1.5 |

| Bore/Symbol | N | O | P | Q | R | S | U | V | W | X |
|---|---|---|---|---|---|---|---|---|---|---|
| 20 | 12 | G1/8" | 12 | 11 | 11 | 24 | 26 | 8 | 6 | 14 |
| 25 | 12 | G1/8" | 12 | 11 | 11 | 29 | 31 | 10 | 8 | 16.5 |
| 32 | 12 | G1/8" | 11 | 11 | 10 | 36 | 38 | 12 | 10 | 20 |
| 40 | 13 | G1/8" | 12 | 12 | 10 | 44 | 47 | 16 | 14 | 26 |
| 50 | 14 | G1/4" | 13 | 13 | 12 | 55 | 58 | 20 | 18 | 32 |
| 63 | 14 | G1/4" | 13 | 13 | 12 | 69 | 72 | 20 | 18 | 38 |
| 80 | 20 | G3/8" | 20 | - | - | 80 | 89 | 25 | 22 | 50 |
| 100 | 20 | G1/2" | 20 | - | - | 108 | 110 | 30 | 26 | 60 |

# Adjustable Aluminum Alloy Cylinder

## Specification:

| Type | 32 | 40 | 50 | 63 |
|---|---|---|---|---|
| Motion | Double acting | | | |
| Series | RNC | | | |
| Fluid | Compressed air | | | |
| Working pressure range (MPa) | 0.1~1 | | | |
| Operating speed(mm/sec) | 50~500 | | | |
| Ambient temperature(℃) | -10~70 | | | |
| Cushion | Adjustable cushion at both ends | | | |
| Port size (G) | 1/8" | 1/4" | | 3/8" |

## How to order:

**RNC 20 × 100 S**

- Specification: RNC: Adjustable Aluminum Cylinder
- Bore: Φ32 / Φ40 / Φ50 / Φ63
- Stroke
- Magnet code:
  - S1:with magnet + 1pc magnet switch
  - S2:with magnet + 2pc magnet switch
  - S3:heat resisting seal ring, max temp.150℃
  - S4:acid resisting piston rod

## Symbol:

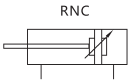


## Product feature:

1. Adjustable cushion,suitable for high speed movement.
2. Front and rear caps are finished by aluminum die-casting,CNC mechanically processed with high precision.Surface by anodizing,good corrosion resistance.
3. Has non-lubrication bearing,no need maintenace for long time work with longer life than usual one.
4. Magnet in piston,whole series can be attached with sensor switch.

## Inner structure drawing:

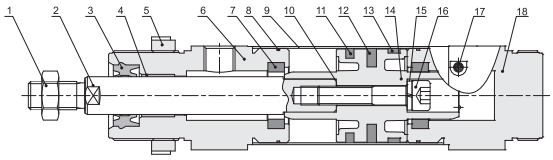


| Number | Name | Number | Name | Number | Name |
|---|---|---|---|---|---|
| 1 | Hexagonal nut | 7 | Buffer sealing ring | 13 | Wearing ring |
| 2 | Piston rod | 8 | O-ring | 14 | Piston |
| 3 | EU Dustproof sealing ring | 9 | Cylinder barrel | 15 | Elastic washer |
| 4 | Composite bearing | 10 | O-ring | 16 | Hexagon socket cap screws |
| 5 | Nut | 11 | C-ring | 17 | Buffer adjusting screw |
| 6 | Front cover | 12 | Magnet | 18 | Rear cover |

## Dimension(mm):

Standard Dimension

■ Φ32~Φ63

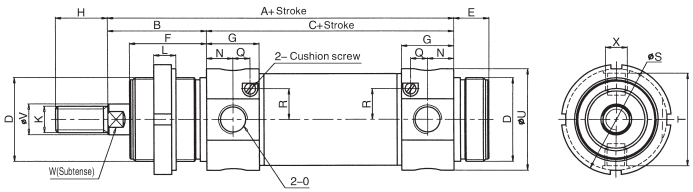


| Bore/Symbol | A | B | C | D | E | F | G | H | K | L |
|---|---|---|---|---|---|---|---|---|---|---|
| 32 | 134 | 38 | 96 | M30×1.5 | 14 | 30 | 22 | 20 | M10 | 8 |
| 40 | 158 | 45 | 113 | M38×1.5 | 16 | 35 | 23.9 | 24 | M12 | 10 |
| 50 | 170 | 50 | 120 | M45×1.5 | 18 | 38 | 23.9 | 32 | M16 | 10 |
| 63 | 175 | 51 | 124 | M45×1.5 | 18 | 38 | 23.9 | 31 | M16 | 10 |

| Bore/Symbol | N | O | Q | R | S | T | U | V | W | X |
|---|---|---|---|---|---|---|---|---|---|---|
| 32 | 9 | G1/8" | 8 | 13 | 42 | 35 | 38 | 12 | 10 | M8×1 |
| 40 | 12 | G1/4" | 7.75 | 14 | 50 | 42 | 46 | 16 | 12 | M10×1 |
| 50 | 12 | G1/4" | 6.9 | 14 | 60 | 53 | 57 | 20 | 16 | M12×1.5 |
| 63 | 13 | G3/8" | 4.9 | 18.5 | 60 | 66 | 70 | 20 | 16 | M14×1.5 |

# Compact Cylinder

## Specification:

| Type | 12 | 16 | 20 | 25 | 32 | 40 | 50 | 63 | 80 | 100 |
|---|---|---|---|---|---|---|---|---|---|---|
| Motion | Double acting | | | | | | | | | |
| Series | SDA,SDAD,SDAJ | | | | | | | | | |
| Fluid | Compressed air | | | | | | | | | |
| Working pressure range (MPa) | 0.1~1 | | | | | | | | | |
| Operating speed(mm/sec) | 50~500 | | | | | | | | | |
| Ambient temperature(℃) | -10~70 | | | | | | | | | |
| Cushion | Bumper | | | | | | | | | |
| Port size (G) | M5 | | | | 1/8" | | 1/4" | | 3/8" | |

## How to order:

**SDA 20 x 100 B S**

Specification

| |
|---|
| SDA: Standard Mini Cylinder |
| SDAD: Double axial Mini Cylinder |
| SDAJ: Double adjustable Mini Cylinder |

Bore

| | |
|---|---|
| Φ12 | Φ40 |
| Φ16 | Φ50 |
| Φ20 | Φ63 |
| Φ25 | Φ80 |
| Φ32 | Φ100 |

Stroke

Thread code

| |
|---|
| Blank: Female thread |
| B: Male thread |
| N: Without thread |

Magnet code

| |
|---|
| S1:with magnet + 1pc magnet switch |
| S2:with magnet + 2pc magnet switch |
| S3:heat resisting seal ring, max temp.150℃ |
| S4:acid resisting piston rod |

## Symbol:

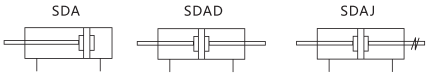

SDA

## Product feature:

1.The cylinder body and rear covers; piston and piston rod adopt compact and reliable riveting roll package structure.
2.After inner diameter’s rolling processing, the cylinder body is hard oxidation treated with good wear durability.
3.The piston seal adopts special two–way sealing structure with compact size and oil storing function.
4.The compact structure helps to save the installation space.
5.With magnetic induction switch tank surrounding the cylinder body, it’s convenient to install the induction switch.
6.Various standard cylinder types are optional.

## Inner structure drawing:

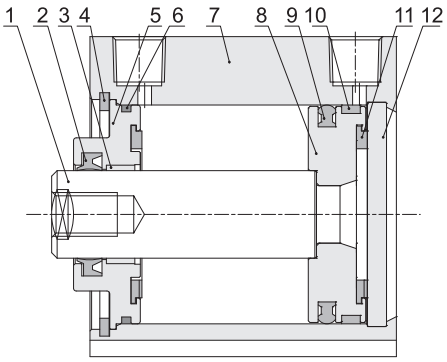


| Number | Name | Number | Name |
|---|---|---|---|
| 1 | Piston rod | 7 | Cylinder barrel |
| 2 | Dustproof sealing ring | 8 | Piston |
| 3 | Composite bearing | 9 | C-ring |
| 4 | Circlip for hole | 10 | Wearing ring |
| 5 | Front cover | 11 | Fenders |
| 6 | O-ring | 12 | Rear cover |

# Compact Cylinder

## Dimension(mm):

### Standard Dimension

■ Φ12~Φ16

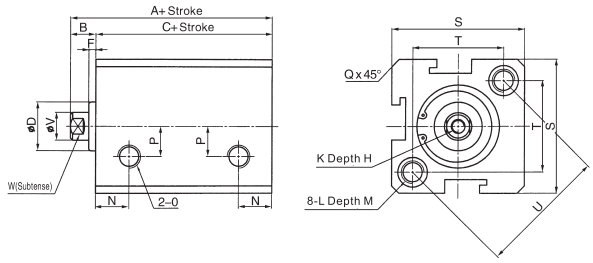


■ Φ20~Φ100

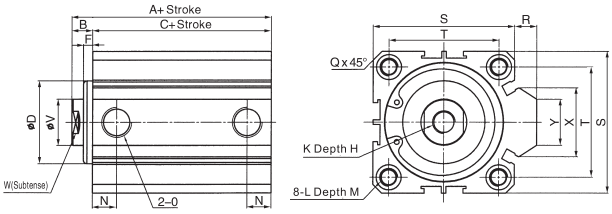


| type | Standard | | | With magnet | | | D | F | H | | K |
|---|---|---|---|---|---|---|---|---|---|---|---|
| Bore/Symbol | A | B | C | A | B | C | | | Stroke≤10 | Stroke>10 | |
| 12 | 22 | 5 | 17 | 32 | 5 | 27 | 10.2 | 1 | 6 | | M3×0.5 |
| 16 | 24 | 5.5 | 18.5 | 34 | 5.5 | 28.5 | 10.5 | 1.5 | 6 | | M3×0.5 |
| 20 | 25 | 5.5 | 19.5 | 35 | 5.5 | 29.5 | 15 | 1.5 | 8 | | M4×0.7 |
| 25 | 27 | 6 | 21 | 37 | 6 | 31 | 17 | 2 | 10 | | M5×0.8 |
| 32 | 31.5 | 7 | 24.5 | 41.5 | 7 | 34.5 | 22 | 3.5 | 12 | | M6×1 |
| 40 | 33 | 7 | 26 | 43 | 7 | 36 | 28 | 3 | 12 | | M8×1.25 |
| 50 | 37 | 9 | 28 | 47 | 9 | 38 | 36 | 5 | 15 | | M10×1.5 |
| 63 | 41 | 9 | 32 | 51 | 9 | 42 | 38 | 3.5 | 15 | | M10×1.5 |
| 80 | 52 | 11 | 41 | 62 | 11 | 51 | 45 | 4 | 15 | 20 | M14×1.5 |
| 100 | 63 | 12 | 51 | 73 | 12 | 61 | 50 | 5 | 18 | 20 | M18×1.5 |

| Bore/Symbol | L | M | N1 | | N2 | | O | Q | R | S | T | U | V | W | X | Y |
|---|---|---|---|---|---|---|---|---|---|---|---|---|---|---|---|---|
| | | | S=5 | S>5 | S=5 | S>5 | | | | | | | | | | |
| 12 | M3 | 12 | 7.5 | 7.5 | 5 | 5 | M5 | 1.6 | - | 25 | 16.2 | 23 | 6 | 5 | - | - |
| 16 | M3 | 12 | 8 | 8 | 5 | 5.5 | M5 | 1.6 | - | 29 | 19.8 | 28 | 6 | 5 | - | - |
| 20 | M4 | 14 | 8.5 | 8.5 | 5.5 | 5.5 | M5 | 2.1 | 2.2 | 34 | 24 | - | 8 | 6 | 11.3 | 10 |
| 25 | M5 | 20.5 | 9 | 9 | 5.5 | 5.5 | M5 | 3.1 | 2 | 40 | 28 | - | 10 | 8 | 12 | 10 |
| 32 | M6 | 20.5 | 9 | 9 | 6.5 | 8 | PT1/8" | 2.1 | 6 | 43.7 | 34 | - | 12 | 10 | 18.3 | 15 |
| 40 | M8 | 22.5 | 9 | 9 | 7.5 | 7.5 | PT1/8" | 2.2 | 6.7 | 52.1 | 40 | - | 16 | 14 | 21.3 | 16 |
| 50 | M10 | 28.5 | 8 | 10.5 | 8 | 10.5 | PT1/8" | 4.2 | 9.7 | 61.8 | 48 | - | 20 | 17 | 30 | 20 |
| 63 | M10 | 24 | 9.5 | 11 | 9.5 | 11 | PT1/4" | 3.2 | 9.7 | 74.6 | 60 | - | 20 | 17 | 28.7 | 20 |
| 80 | M12 | 25 | 11.5 | 13 | 11.5 | 13 | PT3/8" | 3.6 | 10 | 94.4 | 74 | - | 25 | 22 | 36 | 26 |
| 100 | M14 | 33 | 13.5 | 17 | 13.5 | 17 | PT3/8" | 3.6 | 10.1 | 114.4 | 90 | - | 32 | 27 | 35 | 26 |

### Male thread Dimension

■ Φ12~Φ16

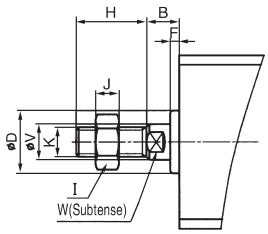


■ Φ20~Φ100

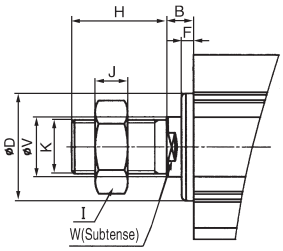


| Bore/Symbol | B | D | F | H | I | J | K2 | V | W |
|---|---|---|---|---|---|---|---|---|---|
| 12 | 5 | 10.2 | 1 | 12 | 8 | 4 | M5 | 6 | 5 |
| 16 | 5.5 | 10.2 | 1.5 | 12 | 8 | 4 | M5 | 6 | 5 |
| 20 | 5/5 | 15 | 1.5 | 15 | 10 | 5 | M6 | 8 | 6 |
| 25 | 6 | 17 | 2 | 17 | 12 | 6 | M8 | 10 | 8 |
| 32 | 7 | 22 | 3.5 | 18 | 17 | 6 | M10×1.25 | 12 | 10 |
| 40 | 7 | 28 | 3 | 28 | 19 | 8 | M14×1.5 | 16 | 14 |
| 50 | 9 | 36 | 5 | 28 | 27 | 11 | M18×1.5 | 20 | 17 |
| 63 | 9 | 38 | 3.5 | 28 | 27 | 11 | M18×1.5 | 20 | 17 |
| 80 | 11 | 45 | 4 | 33 | 32 | 13 | M22×1.5 | 25 | 22 |
| 100 | 12 | 50 | 5 | 38 | 36 | 13 | M26×1.5 | 32 | 27 |

# Compact Cylinder

## Dimension(mm):

### SDAD Standard Dimension

■ Φ12~Φ16

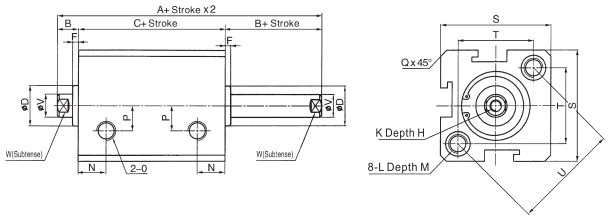


■ Φ20~Φ100

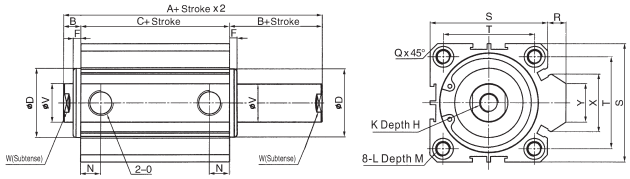


| type | Standard | | | With magnet | | | D | F | H | | K |
|---|---|---|---|---|---|---|---|---|---|---|---|
| Bore/Symbol | A | B | C | A | B | C | | | Stroke≤10 | Stroke>10 | |
| 12 | 27 | 5 | 17 | 37.5 | 5 | 27 | 10.2 | 1 | 6 | | M3×0.5 |
| 16 | 29.5 | 5.5 | 18.5 | 39.5 | 5.5 | 28.5 | 10.5 | 1.5 | 6 | | M3×0.5 |
| 20 | 30.5 | 5.5 | 19.5 | 40.5 | 5.5 | 29.5 | 15 | 1.5 | 8(Stroke=5,be 6.5) | | M4×0.7 |
| 25 | 33 | 6 | 21 | 43 | 6 | 31 | 17 | 2 | 10 Stroke=5,be 7) | | M5×0.8 |
| 32 | 38.5 | 7 | 24.5 | 48.5 | 7 | 34.5 | 22 | 3.5 | 8 | 12 | M6×1 |
| 40 | 40 | 7 | 26 | 50 | 7 | 36 | 28 | 3 | 9 | 12 | M8×1.25 |
| 50 | 46 | 9 | 28 | 56 | 9 | 38 | 36 | 5 | 11 | 15 | M10×1.5 |
| 63 | 50 | 9 | 32 | 60 | 9 | 42 | 38 | 3.5 | 11 | 15 | M10×1.5 |
| 80 | 63 | 11 | 41 | 73 | 11 | 51 | 45 | 4 | 14 | 20 | M14×1.5 |
| 100 | 75 | 12 | 51 | 85 | 12 | 61 | 50 | 5 | 18 | 20 | M18×1.5 |

| Bore/Symbol | L | M | N1 | | N2 | | O | Q | R | S | T | U | V | W | X | Y |
|---|---|---|---|---|---|---|---|---|---|---|---|---|---|---|---|---|
| | | | S=5 | S>5 | S=5 | S>5 | | | | | | | | | | |
| 12 | M3 | 12 | 5.5 | 6.5 | 5 | 5 | M5 | 1.6 | - | 25 | 16.2 | 23 | 6 | 5 | - | - |
| 16 | M3 | 12 | 6.5 | 7.5 | 5 | 5.5 | M5 | 1.6 | - | 29 | 19.8 | 28 | 6 | 5 | - | - |
| 20 | M4 | 14 | 7 | 8.5 | 5.5 | 5.5 | M5 | 2.1 | 2.2 | 34 | 24 | - | 8 | 6 | 11.3 | 10 |
| 25 | M5 | 20.5 | 7.5 | 9 | 5.5 | 5.5 | M5 | 3.1 | 2 | 40 | 28 | - | 10 | 8 | 12 | 10 |
| 32 | M6 | 20.5 | 8 | 9 | 6.5 | 8 | PT1/8" | 2.1 | 6 | 43.7 | 34 | - | 12 | 10 | 18.3 | 15 |
| 40 | M8 | 22.5 | 9 | 9 | 7.5 | 7.5 | PT1/8" | 2.2 | 6.7 | 52.1 | 40 | - | 16 | 14 | 21.3 | 16 |
| 50 | M10 | 28.5 | 8 | 10.5 | 8 | 10.5 | PT1/8" | 4.2 | 9.7 | 61.8 | 48 | - | 20 | 17 | 30 | 20 |
| 63 | M10 | 24 | 9.5 | 11 | 9.5 | 11 | PT1/4" | 3.2 | 9.7 | 74.6 | 60 | - | 20 | 17 | 28.7 | 20 |
| 80 | M12 | 25 | 11.5 | 13 | 11.5 | 13 | PT3/8" | 3.6 | 10 | 94.4 | 74 | - | 25 | 22 | 36 | 26 |
| 100 | M14 | 33 | 13.5 | 17 | 13.5 | 17 | PT3/8" | 3.6 | 10.1 | 114.4 | 90 | - | 32 | 27 | 35 | 26 |

### SDAJ Standard Dimension

■ Φ12~Φ16

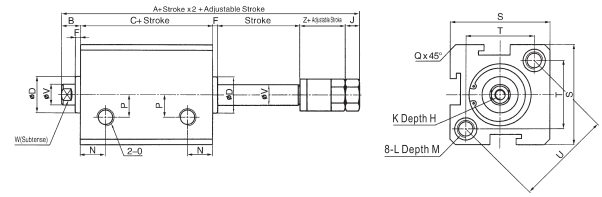


■ Φ20~Φ100

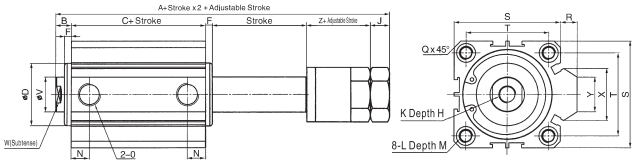


| type | Standard | | | With magnet | | | D | F | H | | K |
|---|---|---|---|---|---|---|---|---|---|---|---|
| Bore/Symbol | A | B | C | A | B | C | | | Stroke≤10 | Stroke>10 | |
| 12 | 40 | 5 | 17 | 50 | 5 | 27 | 10.2 | 1 | 6 | | M3×0.5 |
| 16 | 42.5 | 5.5 | 18.5 | 52.5 | 5.5 | 28.5 | 10.5 | 1.5 | 6 | | M3×0.5 |
| 20 | 47.5 | 5.5 | 19.5 | 57.5 | 5.5 | 29.5 | 15 | 1.5 | 8(Stroke=5,be 6.5) | | M4×0.7 |
| 25 | 54 | 6 | 21 | 64 | 6 | 31 | 17 | 2 | 10 Stroke=5,be 7) | | M5×0.8 |
| 32 | 62 | 7 | 24.5 | 72 | 7 | 34.5 | 22 | 3.5 | 8 | 12 | M6×1 |
| 40 | 65 | 7 | 26 | 75 | 7 | 36 | 28 | 3 | 9 | 12 | M8×1.25 |
| 50 | 74 | 9 | 28 | 84 | 9 | 38 | 36 | 5 | 11 | 15 | M10×1.5 |
| 63 | 76.5 | 9 | 32 | 86.5 | 9 | 42 | 38 | 3.5 | 11 | 15 | M10×1.5 |
| 80 | 93 | 11 | 41 | 103 | 11 | 51 | 45 | 4 | 14 | 20 | M14×1.5 |
| 100 | 105 | 12 | 51 | 115 | 12 | 61 | 50 | 5 | 18 | 20 | M18×1.5 |

| Bore/Symbol | L | M | N1 | | N2 | | O | Q | R | S | T | U | V | W | X | Y | Z |
|---|---|---|---|---|---|---|---|---|---|---|---|---|---|---|---|---|---|
| | | | S=5 | S>5 | S=5 | S>5 | | | | | | | | | | | |
| 12 | M3 | 12 | 5.5 | 6.5 | 5 | 5 | M5 | 1.6 | - | 25 | 16.2 | 23 | 6 | 5 | - | - | 13 |
| 16 | M3 | 12 | 6.5 | 7.5 | 5 | 5.5 | M5 | 1.6 | - | 29 | 19.8 | 28 | 6 | 5 | - | - | 13 |
| 20 | M4 | 14 | 7 | 8.5 | 5.5 | 5.5 | M5 | 2.1 | 2.2 | 34 | 24 | - | 8 | 6 | 11.3 | 10 | 16 |
| 25 | M5 | 20.5 | 7.5 | 9 | 5.5 | 5.5 | M5 | 3.1 | 2 | 40 | 28 | - | 10 | 8 | 12 | 10 | 19 |
| 32 | M6 | 20.5 | 8 | 9 | 6.5 | 8 | PT1/8" | 2.1 | 6 | 43.7 | 34 | - | 12 | 10 | 18.3 | 15 | 21 |
| 40 | M8 | 22.5 | 9 | 9 | 7.5 | 7.5 | PT1/8" | 2.2 | 6.7 | 52.1 | 40 | - | 16 | 14 | 21.3 | 16 | 21 |
| 50 | M10 | 28.5 | 8 | 10.5 | 8 | 10.5 | PT1/8" | 4.2 | 9.7 | 61.8 | 48 | - | 20 | 17 | 30 | 20 | 21 |
| 63 | M10 | 24 | 9.5 | 11 | 9.5 | 11 | PT1/4" | 3.2 | 9.7 | 74.6 | 60 | - | 20 | 17 | 28.7 | 20 | 21 |
| 80 | M12 | 25 | 11.5 | 13 | 11.5 | 13 | PT3/8" | 3.6 | 10 | 94.4 | 74 | - | 25 | 22 | 36 | 26 | 24 |
| 100 | M14 | 33 | 13.5 | 17 | 13.5 | 17 | PT3/8" | 3.6 | 10.1 | 114.4 | 90 | - | 32 | 27 | 35 | 26 | 24 |

# Multi–position Compact Cylinder

## Specification:

| Type | 25 | 40 | 50 | 63 | 80 | 100 |
|---|---|---|---|---|---|---|
| Fluid | Compressed air | | | | | |
| Structure character | Piston type cylinder | | | | | |
| Working pressure range (MPa) | 0.1~1 | | | | | |
| Ambient temperature(℃) | -10~70 | | | | | |

## How to order:

**SDAP 40 × 100 + 60 B S**

- Specification: SDAP: Multi-position Compact Cylinder
- Bore: Φ25, Φ40, Φ63, Φ80, Φ100
- Stroke 1
- Stroke 2
- Thread code: Blank: Female thread; B: Male thread; N: Without thread
- Magnet code: S1:with magnet + 1pc magnet switch; S2:with magnet + 2pc magnet switch; S3:heat resisting seal ring, max temp.150℃; S4:acid resisting piston rod

## Symbol:

SDAP

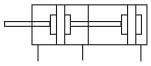

## Product feature:

Making the combined cylinder have multi-position.Connecting two cylinders which has the same bore,but different stroke.Pay attention to the stroke that the later acting longer than former acting,i.e.stroke2>stroke1,if special requirements,we can supply combination which have two or more cylinders ,total stroke not more than 2000mm.

Attention: its pull force is similar to single cylinder.

SDAP

## Dimension(mm):

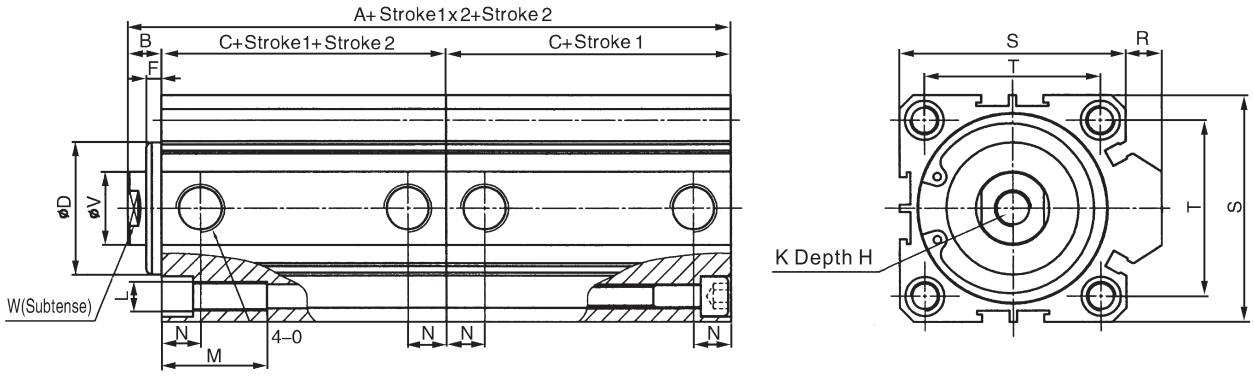


| type | Without magnet | | With magnet | | C1 | D | E | | F | G | K1 | O | P | P1 | P3 | P4 | S | T1 | V | W |
|---|---|---|---|---|---|---|---|---|---|---|---|---|---|---|---|---|---|---|---|---|
| Bore/Symbol | A | C2 | A | C2 | | | ≤10 | >10 | | | | | | | | | | | | |
| 25 | 49 | 22 | 59 | 32 | 21 | 42 | 10 | | 4 | 2 | M5×0.8 | M5×0.8 | 8.2 | M6×1 | 15 | 5.5 | 40 | 28 | 10 | 8 |
| 40 | 60 | 27 | 70 | 37 | 26 | 59 | 12 | | 4 | 3 | M8×1.25 | PT1/8″ | 10 | M8×1.25 | 20 | 7.5 | 52 | 40 | 16 | 14 |
| 63 | 74 | 33 | 84 | 43 | 32 | 84.5 | 15 | | 5 | 4 | M10×1.5 | PT1/4″ | 11 | M8×1.25 | 25 | 8.5 | 75 | 60 | 20 | 17 |
| 80 | 94 | 42 | 104 | 52 | 41 | 104 | 15 | 20 | 6 | 5 | M14×1.5 | PT3/8″ | 14 | M12×1.75 | 25 | 10.5 | 94 | 74 | 25 | 22 |
| 100 | 115 | 52 | 125 | 62 | 51 | 124 | 18 | 20 | 7 | 5 | M18×1.5 | PT3/8″ | 17.5 | M14×2 | 30 | 13 | 114 | 90 | 32 | 27 |

# Multi–pressure Compact Cylinder

## Specification:

| Type | 25 | 40 | 50 | 63 | 80 | 100 |
|---|---|---|---|---|---|---|
| Fluid | Compressed air | | | | | |
| structure character | Piston type cylinder | | | | | |
| Working pressure range (MPa) | 0.1~1 | | | | | |
| Ambient temperature(℃) | -10~70 | | | | | |

## How to order:

**SDAT 40×100 3 B S**

- Specification: SDAT: Multi-pressure Compact Cylinder
- Bore: Φ25, Φ40, Φ63, Φ80, Φ100
- Stroke
- Cylinder qty
- Thread code: Blank: Female thread; B: Male thread; N: Without thread
- Magnet code: S1:with magnet + 1pc magnet switch; S2:with magnet + 2pc magnet switch; S3:heat resisting seal ring, max temp.150℃; S4:acid resisting piston rod

## Symbol:

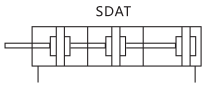

SDAT

## Product feature:

1.By connecting 2,3 or 4 cylinders which have the same bore and stroke,make the push force as 2,3 or 4 times than one cylinder.
2.Only need two air ports.
3.Attention: Draw–in force is the same as one cylinder.

## Dimension(mm):

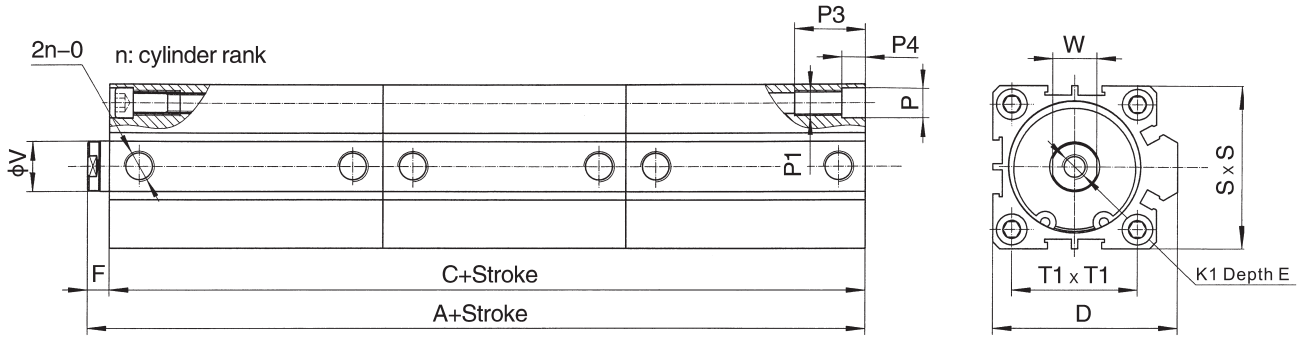


| type | Without magnet | | With magnet | | C1 | E | | F | K1 | O | P | P1 | P3 | P4 | S | T1 | V | W |
|---|---|---|---|---|---|---|---|---|---|---|---|---|---|---|---|---|---|---|
| Bore/Symbol | A | C | A | C | | ≤10 | >10 | | | | | | | | | | | |
| 25 | 22n+5 | 22n-1 | 22n+15 | 22n+9 | 42 | 10 | | 6 | M5×0.8 | M5×0.8 | 8.2 | M6×1 | 15 | 5.5 | 40 | 28 | 10 | 8 |
| 40 | 27n+6 | 27n-1 | 27n+16 | 27n+9 | 59 | 12 | | 7 | M8×1.25 | PT1/8" | 10 | M8×1.25 | 20 | 7.5 | 52 | 40 | 16 | 14 |
| 63 | 33n+8 | 33n-1 | 33n+18 | 33n+9 | 84.5 | 15 | | 9 | M10×1.5 | PT1/4" | 11 | M8×1.25 | 25 | 8.5 | 75 | 60 | 20 | 17 |
| 80 | 42n+10 | 42n-1 | 42n+20 | 42n+9 | 104 | 15 | 20 | 11 | M14×1.5 | PT3/8" | 14 | M12×1.75 | 25 | 10.5 | 94 | 74 | 25 | 22 |
| 100 | 52n+11 | 52n-1 | 52n+21 | 52n+9 | 124 | 18 | 20 | 12 | M18×1.5 | PT3/8" | 17.5 | M14×2 | 30 | 13 | 114 | 90 | 32 | 27 |

# Compact Cylinder

## Specification:

| Type | 12 | 16 | 20 | 25 | 32 | 40 | 50 | 63 | 80 | 100 | 125 |
|---|---|---|---|---|---|---|---|---|---|---|---|
| Motion | Double acting | | | | | | | | | | |
| Series | CQ, CQD | | | | | | | | | | |
| Fluid | Compressed air | | | | | | | | | | |
| Working pressure range (MPa) | 0.1~1 | | | | | | | | | | |
| Operating speed(mm/sec) | 50~500 | | | | | | | | | | |
| Ambient temperature(℃) | -10~70 | | | | | | | | | | |
| Cushion | Bumper | | | | | | | | | | |
| Port size (G) | M5 | | | | 1/8" | | 1/4" | | 3/8" | | |

## How to order:

**CQ 20×100 B S**

- Specification
  - CQ: Standard Cylinder
  - CQD: Double axial Cylinder
- Bore

| | |
|---|---|
| Φ12 | Φ50 |
| Φ16 | Φ63 |
| Φ20 | Φ80 |
| Φ25 | Φ100 |
| Φ32 | Φ125 |
| Φ40 | |

- Stroke
- Thread code
  - Blank: Female thread
  - B: Male thread
  - N: Without thread
- Magnet code
  - S1:with magnet + 1pc magnet switch
  - S2:with magnet + 2pc magnet switch
  - S3:heat resisting seal ring, max temp.150℃
  - S4:acid resisting piston rod

## Symbol:

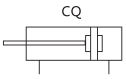


## Product feature:

1. The cylinder body and rear covers; piston and piston rod adopt compact and reliable riveting roll package structure.
2. After inner diameter’s rolling processing, the cylinder body is hard oxidation treated with good wear durability.
3. The piston seal adopts special two–way sealing structure with compact size and oil storing function.
4. The compact structure helps to save the installation space.
5. With magnetic induction switch tank surrounding the cylinder body, it’s convenient to install the induction switch.
6. Various standard cylinder types are optional.

## Inner structure drawing:

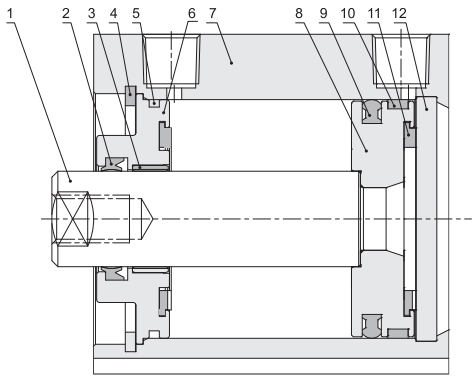


| Number | Name |
|---|---|
| 1 | Piston rod |
| 2 | Dustproof sealing ring |
| 3 | Composite bearing |
| 4 | Circlip for hole |
| 5 | O-ring |
| 6 | Front cover |
| 7 | Cylinder barrel |
| 8 | Piston |
| 9 | C-ring |
| 10 | Wearing ring |
| 11 | Fenders |
| 12 | Rear cover |

# Compact Cylinder

## Dimension(mm):

### Outer thread Dimension

■ Φ12~Φ125(Stroke≤100)

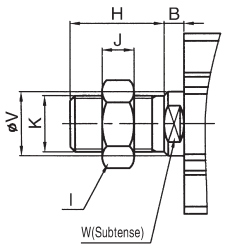


■ Φ32~Φ125(Stroke>100,Long type)

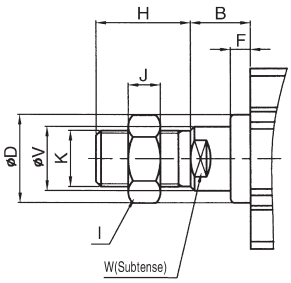


| Bore/Symbol | B | H | I | J | K | V | W |
|---|---|---|---|---|---|---|---|
| 12 | 3.5 | 10.5 | 8 | 4 | M5 | 6 | 5 |
| 16 | 3.5 | 12 | 10 | 5 | M6 | 8 | 6 |
| 20 | 4.5 | 14 | 12 | 6 | M8 | 10 | 8 |
| 25 | 5 | 17.5 | 17 | 6 | M10×1.25 | 12 | 10 |
| 32 | 5 | 23.5 | 19 | 8 | M14×1.5 | 16 | 14 |
| 40 | 5 | 23.5 | 19 | 8 | M14×1.5 | 16 | 14 |
| 50 | 5 | 28.5 | 27 | 11 | M18×1.5 | 20 | 17 |
| 63 | 5 | 28.5 | 27 | 11 | M18×1.5 | 20 | 17 |
| 80 | 8 | 35.5 | 32 | 13 | M22×1.5 | 25 | 22 |
| 100 | 8 | 35.5 | 36 | 13 | M26×1.5 | 32 | 27 |
| 125 | - | 45 | 46 | 14 | M30×1.5 | 36 | 32 |

| Bore/Symbol | B | D | F | H | I | J | K | V | W |
|---|---|---|---|---|---|---|---|---|---|
| 32 | 15 | 22 | 5 | 23.5 | 19 | 8 | M14×1.5 | 16 | 14 |
| 40 | 15 | 28 | 5 | 23.5 | 19 | 8 | M14×1.5 | 16 | 14 |
| 50 | 15 | 35 | 5 | 28.5 | 27 | 11 | M18×1.5 | 20 | 17 |
| 63 | 15 | 35 | 5 | 28.5 | 27 | 11 | M18×1.5 | 20 | 17 |
| 80 | 18 | 43 | 5 | 35.5 | 32 | 13 | M22×1.5 | 25 | 22 |
| 100 | 18 | 59 | 5 | 35.5 | 36 | 13 | M26×1.5 | 32 | 27 |
| 125 | 18 | 63 | 5 | 45 | 46 | 14 | M30×1.5 | 36 | 32 |

### Standard Dimensions

■ Φ12~Φ16

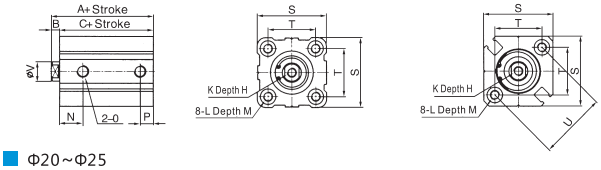


■ Φ20~Φ25

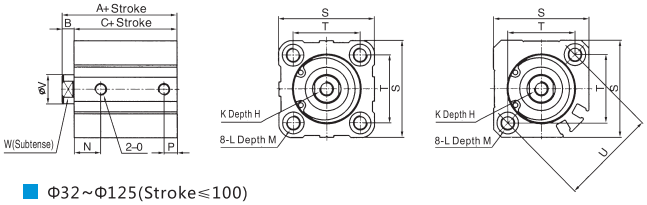


■ Φ32~Φ125(Stroke≤100)

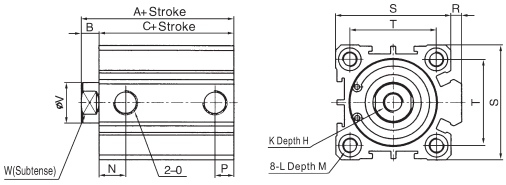


| type / Bore/Symbol | Standard A Stroke≤50 | Standard A Stroke≥60 | Standard C Stroke≤50 | Standard C Stroke≥60 | With magnet A | With magnet C | B | H | K | L |
|---|---|---|---|---|---|---|---|---|---|---|
| 12 | 20.5 | - | 17 | - | 31.5 | 28 | 3.5 | 6 | M3 | M4 |
| 16 | 22 | - | 18.5 | - | 34 | 30.5 | 3.5 | 8 | M4 | M4 |
| 20 | 24 | 34 | 19.5 | 29.5 | 36 | 31.5 | 4.5 | 7 | M5 | M6 |
| 25 | 27.5 | 37.5 | 22.5 | 32.5 | 37.5 | 32.5 | 5 | 12 | M6 | M6 |
| 32 Stroke=5 | 30 | 40 | 23 | 33 | 40 | 33 | 7 | 13 | M8 | M6 |
| 32 Stroke>5 | | | | | | | | | | |
| 40 | 36.5 | 46.5 | 29.5 | 39.5 | 46.5 | 39.5 | 7 | 13 | M8 | M6 |
| 50 Stroke=5 | 38.5 | 48.5 | 30.5 | 40.5 | 48.5 | 40.5 | 8 | 15 | M10 | M8 |
| 50 Stroke>5 | | | | | | | | | | |
| 63 Stroke=5 | 44 | 54 | 36 | 46 | 54 | 46 | 8 | 15 | M10 | M10 |
| 63 Stroke>5 | | | | | | | | | | |
| 80 | 53.5 | 63.5 | 43.5 | 53.5 | 63.5 | 53.5 | 10 | 20 | M16 | M12 |
| 100 | 65 | 75 | 53 | 63 | 75 | 63 | 12 | 26 | M20 | M12 |
| 125 | 99 | | 99 | | 99 | 83 | 16 | 30 | M22 | M14 |

| type / Bore/Symbol | M | N Standard | N With magnet | O | P Standard | P With magnet | R | S | T | U | V | W |
|---|---|---|---|---|---|---|---|---|---|---|---|---|
| 12 | 11 | 7.5 | 9 | M5 | 5 | 7 | - | 25 | 15.5 | 22 | 6 | 5 |
| 16 | 11 | 8 | 9.5 | M5 | 5.5 | | - | 29 | 20 | 28 | 8 | 6 |
| 20 | 17 | 9 | 9.5 | M5 | 5.5 | | - | 36 | 25.5 | 36 | 10 | 8 |
| 25 | 17 | 11 | | M5 | 5.5 | | - | 40 | 28 | 40 | 12 | 10 |
| 32 Stroke=5 | 17 | 7.5 | 10.5 | PT1/8" | 6.5 | 7.5 | 4.5 | 45 | 34 | - | 16 | 14 |
| 32 Stroke>5 | | 10.5 | | | 7.5 | | | | | | | |
| 40 | 17 | 11 | | PT1/8" | 8 | | 4 | 53 | 40 | - | 16 | 14 |
| 50 Stroke=5 | 22 | 9 | 10.5 | PT1/4" | 9 | 10.5 | 7 | 64 | 50 | - | 20 | 17 |
| 50 Stroke>5 | | 10.5 | | | 10.5 | | | | | | | |
| 63 Stroke=5 | 28.5 | 14 | 15 | PT1/4" | 9.5 | 10.5 | 7 | 77 | 60 | - | 20 | 17 |
| 63 Stroke>5 | | 15 | | | 10.5 | | | | | | | |
| 80 | 35.5 | 16 | | PT3/8" | 14 | | 6 | 98 | 77 | - | 25 | 22 |
| 100 | 35.5 | 20 | | PT3/8" | 17.5 | | 6.5 | 117 | 94 | - | 32 | 27 |
| 125 | 43.4 | 24.5 | | PT3/8" | 24.5 | | 11 | 142 | 114 | - | 36 | 32 |

# Compact Cylinder

## Dimension(mm):

### CQD Dimensions

■ Φ12~Φ16

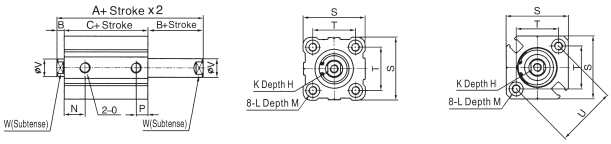


■ Φ20~Φ25

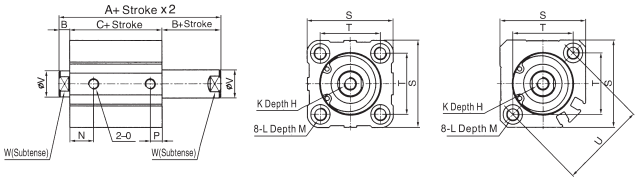


■ Φ32~Φ125(Stroke≤100)

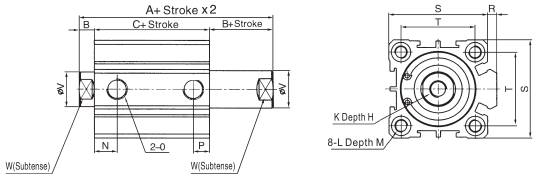


| type | | Standard | | With magnet | | B | H | K | L |
|---|---|---|---|---|---|---|---|---|---|
| Bore/Symbol | | A | C | A | C | | | | |
| 12 | | 32 | 25.2 | 39.4 | 32.4 | 3.5 | 6 | M3 | M4 |
| 16 | | 33 | 26 | 43 | 36 | 3.5 | 8 | M4 | M4 |
| 20 | | 35 | 26 | 47 | 38 | 4.5 | 7 | M5 | M6 |
| 25 | | 39 | 29 | 49 | 39 | 5 | 12 | M6 | M6 |
| 32 | | 44.5 | 30.5 | 54.5 | 40.5 | 7 | 13 | M8 | M6 |
| 40 | | 54 | 40 | 64 | 50 | 7 | 13 | M8 | M6 |
| 50 | | 56.5 | 40.5 | 66.5 | 50.5 | 8 | 15 | M10 | M8 |
| 63 | Stroke=5<br>Stroke>5 | 58 | 42 | 68 | 52 | 8 | 12 | M10 | M10 |
| | Other | | | | | | 15 | | |
| 80 | Stroke≤15 | 71 | 51 | 81 | 61 | 10 | 14 | M16 | M12 |
| | Other | | | | | | 20 | | |
| 100 | Stroke≤15 | 84.5 | 60.5 | 94.5 | 60.5 | 12 | 18 | M20 | M12 |
| | Other | | | | | | 26 | | |
| 125 | Stroke≤15 | 115 | | 115 | | 16 | 22.5 | M22 | M14 |
| | Other | | | | | | 30 | | |

| type | | N | O | R | S | T | U | V | W |
|---|---|---|---|---|---|---|---|---|---|
| Bore/Symbol | | | | | | | | | |
| 12 | | 3.5 | M5 | - | 25 | 15.5 | 6 | 6 | 5 |
| 16 | | 3.5 | M5 | - | 29 | 20 | 8 | 8 | 6 |
| 20 | | 4.5 | M5 | - | 36 | 25.5 | 7 | 10 | 7 |
| 25 | | 5 | M5 | - | 40 | 28 | 12 | 12 | 10 |
| 32 | | 7 | PT1/8" | 4.5 | 45 | 34 | 13 | 16 | 14 |
| 40 | | 7 | PT1/8" | 4 | 53 | 40 | 13 | 16 | 14 |
| 50 | | 8 | PT1/4" | 7 | 64 | 50 | 15 | 20 | 17 |
| 63 | Stroke=5 | 12 | PT1/4" | 7 | 77 | 60 | - | 20 | 17 |
| | Stroke≤15<br>Other | 16 | | | | | | | |
| 80 | Stroke≤15<br>Other | 16 | PT3/8" | 6 | 98 | 77 | - | 25 | 22 |
| 100 | Stroke≤15<br>Other | 21 | PT3/8" | 6.5 | 117 | 94 | - | 32 | 27 |
| 125 | Stroke≤15<br>Other | 24.5 | PT3/8" | 11 | 142 | 114 | - | 36 | 32 |

# Compact Cylinder

## Specification:

| Type | 12 | 16 | 20 | 25 | 32 | 40 | 50 | 63 | 80 | 100 | 125 |
|---|---|---|---|---|---|---|---|---|---|---|---|
| Motion | Double acting | | | | | | | | | | |
| Series | ADVU, ADVUD, ADVUJ | | | | | | | | | | |
| Fluid | Compressed air | | | | | | | | | | |
| Working pressure range (MPa) | 0.1~1 | | | | | | | | | | |
| Operating speed(mm/sec) | 50~500 | | | | | | | | | | |
| Ambient temperature(℃) | -10~70 | | | | | | | | | | |
| Cushion | Bumper | | | | | | | | | | |
| Port size (G) | M5 | | | 1/8" | | 1/4" | | | 3/8" | | |

## How to order:

**ADVU 50×40 B S**

Specification

| |
|---|
| ADVU: Standard Cylinder |
| ADVUD: Double axial Cylinder |
| ADVUJ: Stroke adjustable Cylinder |

Bore

| | |
|---|---|
| Φ20 | Φ63 |
| Φ25 | Φ80 |
| Φ32 | Φ100 |
| Φ40 | Φ125 |
| Φ50 | |

Stroke

Thread code

| |
|---|
| Blank: Female thread |
| B: Male thread |
| N: Without thread |

Magnet code

| |
|---|
| S1:with magnet + 1pc magnet switch |
| S2:with magnet + 2pc magnet switch |
| S3:heat resisting seal ring, max temp.150℃ |
| S4:acid resisting piston rod |

## Symbol:

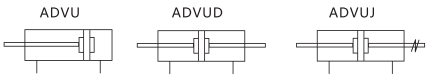


## Product feature:

1. The cylinder body is connected with the front and rear covers threads, with good strength and convenient maintenance.
2. After inner diameter's finishing machining, the cylinder body is hard oxidation treated with good wear durability.
3. The piston seal adopts special two-way sealing structure with compact size and oil storing function.
4. The compact structure helps to save the installation space.
5. With magnetic induction switch tank surrounding the cylinder body, it's convenient to install the induction switch.
6. Various standard cylinder types are optional



## Inner structure drawing:

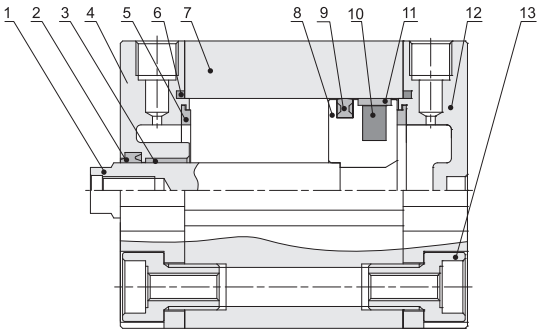


| Number | Name |
|---|---|
| 1 | Piston rod |
| 2 | Dustproof sealing ring |
| 3 | Composite bearing |
| 4 | Front cover |
| 5 | Fenders |
| 6 | D-ring |
| 7 | Cylinder barrel |
| 8 | Piston |
| 9 | C-ring |
| 10 | Magnet |
| 11 | Wearing ring |
| 12 | Rear cover |
| 13 | End cover screw |

# Compact Cylinder

## Dimension(mm):

### Standard Dimensions

Φ20~Φ125

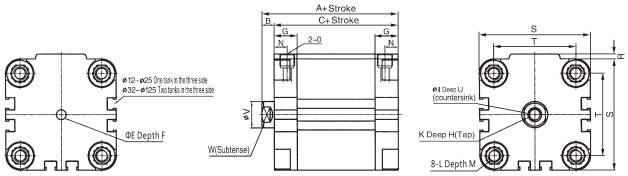


| Bore/Symbol | A | B | C | E | F | G | H | I | K | L |
|---|---|---|---|---|---|---|---|---|---|---|
| 12 | 42.5 | 4.5 | 38 | 6 | 4 | 11.5 | 6 | 3.3 | M3 | M4 |
| 16 | 42.5 | 4.5 | 38 | 6 | 4 | 11.5 | 8 | 4.5 | M4 | M4 |
| 20 | 42.5 | 4.5 | 38 | 6 | 4 | 11.5 | 12 | 5.5 | M5 | M5 |
| 25 | 45 | 5.5 | 39.5 | 6 | 4 | 11.5 | 12 | 5.5 | M5 | M5 |
| 32 | 50.5 | 6 | 44.5 | 6 | 4 | 14 | 14 | 6.5 | M6 | M6 |
| 40 | 52 | 6.5 | 45.5 | 6 | 4 | 14 | 14 | 6.5 | M6 | M6 |
| 50 | 53 | 7.5 | 45.5 | 6 | 4 | 14 | 16 | 8.5 | M8 | M8 |
| 63 | 57.5 | 7.5 | 50 | 8 | 4 | 15 | 16 | 8.5 | M8 | M10 |
| 80 | 64 | 8 | 56 | 8 | 4 | 16 | 20 | 10.5 | M10 | M10 |
| 100 | 76.5 | 10 | 66.5 | 8 | 4 | 19 | 24 | 12.5 | M12 | M10 |
| 125 | 92 | 11 | 81 | 8 | 4 | 20 | 24 | 12.5 | M12 | M10 |

| Bore/Symbol | M | N | O | R | S | T | U | V | W |
|---|---|---|---|---|---|---|---|---|---|
| 12 | 18 | 7 | M5 | 1 | 18 | 28.5 | 1.5 | 6 | 5 |
| 16 | 18 | 7 | M5 | 1 | 18 | 28.5 | 1.5 | 8 | 6 |
| 20 | 18.5 | 7 | M5 | 1.5 | 36 | 22 | 2 | 10 | 8 |
| 25 | 18.5 | 7 | M5 | 1.5 | 40 | 26 | 2 | 10 | 8 |
| 32 | 21.5 | 8 | PT1/8" | 2 | 50 | 32 | 2.6 | 12 | 10 |
| 40 | 21.5 | 8 | PT1/8" | 2.5 | 60 | 42 | 2.6 | 12 | 10 |
| 50 | 22 | 8 | PT1/8" | 3 | 68 | 50 | 3.3 | 16 | 13 |
| 63 | 24.5 | 8 | PT1/8" | 4 | 87 | 62 | 3.3 | 16 | 13 |
| 80 | 27.5 | 8.5 | PT1/8" | 4 | 107 | 82 | 4.7 | 20 | 17 |
| 100 | 32.5 | 10.5 | PT1/4" | 5 | 128 | 103 | 6.1 | 25 | 22 |
| 125 | 32.5 | 10.5 | PT1/4" | - | 134 | 110 | 6.1 | 25 | 22 |

### ADVUD Dimensions

Φ12~Φ125

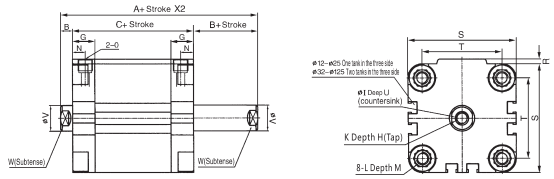


| Bore/Symbol | A | B | C | G | H | I | K | L |
|---|---|---|---|---|---|---|---|---|
| 12 | 47 | 4.5 | 38 | 11.5 | 8 | 3.3 | M3 | M4 |
| 16 | 47 | 4.5 | 38 | 11.5 | 10 | 4.5 | M4 | M4 |
| 20 | 47 | 4.5 | 38 | 11.5 | 12 | 5.5 | M5 | M5 |
| 25 | 50.5 | 5.5 | 39.5 | 11.5 | 12 | 5.5 | M5 | M5 |
| 32 | 56.5 | 6 | 44.5 | 14 | 14 | 6.5 | M6 | M6 |
| 40 | 58.5 | 6.5 | 45.5 | 14 | 14 | 6.5 | M6 | M6 |
| 50 | 60.5 | 7.5 | 45.5 | 14 | 16 | 8.5 | M8 | M8 |
| 63 | 65 | 7.5 | 50 | 15 | 16 | 8.5 | M8 | M10 |
| 80 | 72 | 8 | 56 | 16 | 20 | 10.5 | M10 | M10 |
| 100 | 86.5 | 10 | 66.5 | 19 | 24 | 12.5 | M12 | M10 |
| 125 | 103 | 11 | 81 | 20 | 24 | 12.5 | M12 | M10 |

| Bore/Symbol | M | N | O | R | S | T | U | V | W |
|---|---|---|---|---|---|---|---|---|---|
| 12 | 18.5 | 7 | M5 | 1 | 29 | 18 | 1.5 | 6 | 5 |
| 16 | 18.5 | 7 | M5 | 1 | 29 | 18 | 1.5 | 8 | 6 |
| 20 | 18.5 | 7 | M5 | 1.5 | 36 | 22 | 2 | 10 | 8 |
| 25 | 18.5 | 7 | M5 | 1.5 | 40 | 26 | 2 | 10 | 8 |
| 32 | 21.5 | 8 | PT1/8" | 2 | 50 | 32 | 2.6 | 12 | 10 |
| 40 | 21.5 | 8 | PT1/8" | 2.5 | 60 | 42 | 2.6 | 12 | 10 |
| 50 | 22 | 8 | PT1/8" | 3 | 68 | 50 | 3.3 | 16 | 13 |
| 63 | 24.5 | 8 | PT1/8" | 4 | 87 | 62 | 3.3 | 16 | 13 |
| 80 | 27.5 | 8.5 | PT1/8" | 4 | 107 | 82 | 4.7 | 20 | 17 |
| 100 | 32.5 | 10.5 | PT1/4" | 5 | 128 | 103 | 6.1 | 25 | 22 |
| 125 | 32.5 | 10.5 | PT1/4" | - | 134 | 110 | 6.1 | 25 | 22 |

### ADVUB Dimensions

Φ20~Φ125

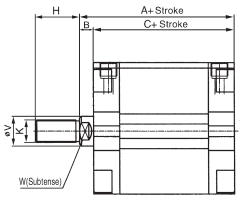


| Bore/Symbol | A | B | C | H | K | V | W |
|---|---|---|---|---|---|---|---|
| 12 | 42.5 | 4.5 | 38 | 16 | M6×1 | 6 | 5 |
| 16 | 42.5 | 4.5 | 38 | 20 | M8×1.25 | 8 | 6 |
| 20 | 42.5 | 4.5 | 38 | 22 | M10×1.25 | 10 | 8 |
| 25 | 45 | 5.5 | 39.5 | 22 | M10×1.25 | 10 | 8 |
| 32 | 50.5 | 6 | 44.5 | 22 | M10×1.25 | 12 | 10 |
| 40 | 52 | 6.5 | 45.5 | 22 | M10×1.25 | 12 | 10 |
| 50 | 53 | 7.5 | 45.5 | 24 | M12×1.25 | 16 | 13 |
| 63 | 57.5 | 7.5 | 50 | 24 | M12×1.25 | 16 | 13 |
| 80 | 64 | 8 | 56 | 32 | M16×1.5 | 20 | 17 |
| 100 | 76.5 | 10 | 66.5 | 40 | M20×1.5 | 25 | 22 |
| 125 | 92 | 11 | 81 | 40 | M20×1.5 | 25 | 22 |

### ADVUJ Dimensions

Φ12~Φ125

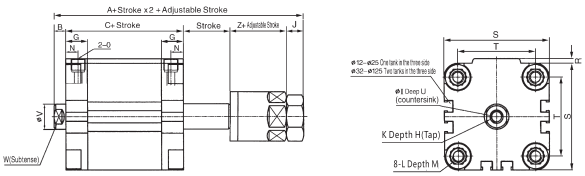


| Bore/Symbol | A | B | C | G | H | I | K | L | M |
|---|---|---|---|---|---|---|---|---|---|
| 12 | 63.5 | 4.5 | 38 | 11.5 | 8 | 3.3 | M3 | M4 | 18.5 |
| 16 | 67.5 | 4.5 | 38 | 11.5 | 10 | 4.5 | M4 | M4 | 18.5 |
| 20 | 69.5 | 4.5 | 38 | 11.5 | 12 | 5.5 | M5 | M5 | 18.5 |
| 25 | 72 | 5.5 | 39.5 | 11.5 | 12 | 5.5 | M5 | M5 | 18.5 |
| 32 | 77.5 | 6 | 44.5 | 14 | 14 | 6.5 | M6 | M6 | 21.5 |
| 40 | 79 | 6.5 | 45.5 | 14 | 14 | 6.5 | M6 | M6 | 21.5 |
| 50 | 81 | 7.5 | 45.5 | 14 | 16 | 8.5 | M8 | M8 | 22 |
| 63 | 85.5 | 7.5 | 50 | 15 | 16 | 8.5 | M8 | M10 | 24.5 |
| 80 | 95 | 8 | 56 | 16 | 20 | 10.5 | M10 | M10 | 27.5 |
| 100 | 115.5 | 10 | 66.5 | 19 | 24 | 12.5 | M12 | M10 | 32.5 |
| 125 | 131 | 11 | 81 | 20 | 24 | 12.5 | M12 | M10 | 32.5 |

| Bore/Symbol | N | O | R | S | T | U | V | W | Z |
|---|---|---|---|---|---|---|---|---|---|
| 12 | 7 | M5 | 1 | 29 | 18 | 1.5 | 6 | 5 | 16 |
| 16 | 7 | M5 | 1 | 29 | 18 | 1.5 | 8 | 6 | 19 |
| 20 | 7 | M5 | 1.5 | 36 | 22 | 2 | 10 | 8 | 21 |
| 25 | 7 | M5 | 1.5 | 40 | 26 | 2 | 10 | 8 | 21 |
| 32 | 8 | PT1/8" | 2 | 50 | 32 | 2.6 | 12 | 10 | 21 |
| 40 | 8 | PT1/8" | 2.5 | 60 | 42 | 2.6 | 12 | 10 | 21 |
| 50 | 8 | PT1/8" | 3 | 68 | 50 | 3.3 | 16 | 13 | 21 |
| 63 | 8 | PT1/8" | 4 | 87 | 62 | 3.3 | 16 | 13 | 21 |
| 80 | 8.5 | PT1/8" | 4 | 107 | 82 | 4.7 | 20 | 17 | 23 |
| 100 | 10.5 | PT1/4" | 5 | 128 | 103 | 6.1 | 25 | 22 | 29 |
| 125 | 10.5 | PT1/4" | - | 134 | 110 | 6.1 | 25 | 22 | 29 |

# ISO21287 Standard Compact Cylinder

## Specification:

| Type | 12 | 16 | 20 | 25 | 32 | 40 | 50 | 63 | 80 | 100 | 125 |
|---|---|---|---|---|---|---|---|---|---|---|---|
| Motion | Double acting | | | | | | | | | | |
| Series | ACE, ACED, ACEJ | | | | | | | | | | |
| Fluid | Compressed air | | | | | | | | | | |
| Working pressure range (MPa) | 0.1~1 | | | | | | | | | | |
| Operating speed(mm/sec) | 50~800 | | | | | | | | | | |
| Ambient temperature(℃) | -20~80 | | | | | | | | | | |
| Cushion | Bumper | | | | | | | | | | |
| Port size (G) | M5×0.8 | | | 1/8" | | | | | | | 1/4" |

## How to order:

**ACE 20 × 30 S**

Specification
- ACE: Standard Compact Cylinder
- ACED: Double axial Compact Cylinder
- ACEJ: Stroke adjustable Compact Cylinder

Bore

| | |
|---|---|
| Φ12 | Φ50 |
| Φ16 | Φ63 |
| Φ20 | Φ80 |
| Φ25 | Φ100 |
| Φ32 | Φ125 |
| Φ40 | |

Stroke

Magnet Code
- Blank : without magnet
- S : with magnet

## Symbol:

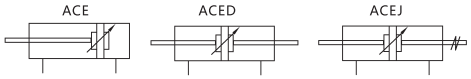

ACE

## Product feature:

1. Execute ISO21287 standard with high universality of installation dimention.
2. The cylinder body is connected with the front and rear covers threads, with good strength and con–venient maintenance.
3. After inner diameter’s finishing machining, the cylinder body is hard oxidation treated with good wear durability.
4. The piston seal adopts special two–way sealing structure with compact size and oil storing function.
5. The compact structure helps to save the installation space.
6. With magnetic induction switch tank surrounding the cylinder body, it’s convenient to install the induction switch.
7. The fenders inside can absorb the remaining energy from high speed runing and machinery rotation.

## Inner structure drawing:

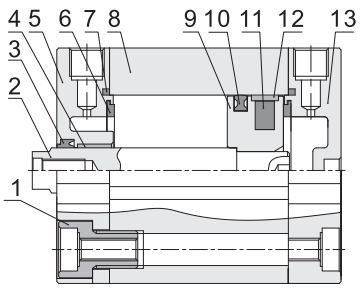


| Number | Name | Number | Name |
|---|---|---|---|
| 1 | End cover screw | 8 | Cylinder barrel |
| 2 | Piston rod | 9 | Piston |
| 3 | Dustproof sealing ring | 10 | Sealing Ring |
| 4 | Composite bearing | 11 | Magnet |
| 5 | Front cover | 12 | Wearing ring |
| 6 | Fenders | 13 | Rear cover |
| 7 | O-ring | | |

# ISO21287 Standard Compact Cylinder

## Dimension(mm):

### ACE Standard Dimensions

■ Φ12

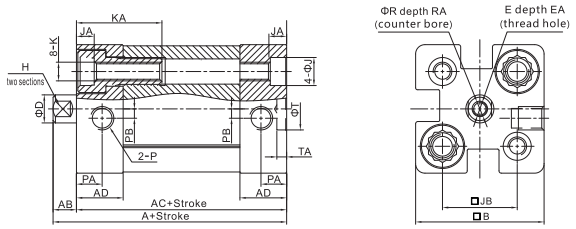


■ Φ16~Φ25

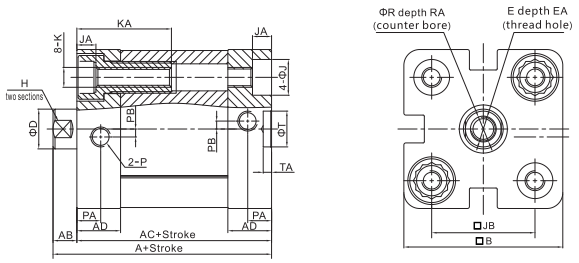


■ Φ32~Φ63

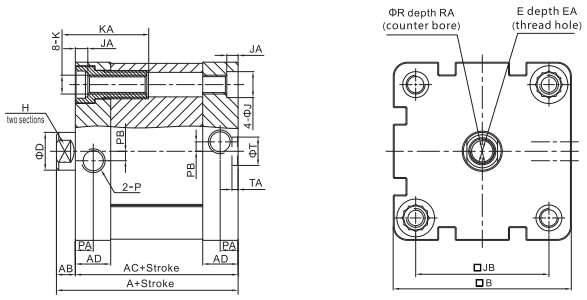


| Bore/Symbol | A | AB | AC | AD | B | D | E | EA | H | J | JA | JB |
|---|---|---|---|---|---|---|---|---|---|---|---|---|
| 12 | 40 | 5 | 35 | 10 | 27.5 | 6 | M3×0.5 | 8 | 5 | 6 | 3.5 | 16 |
| 16 | 40 | 5 | 35 | 10 | 30 | 8 | M4×0.7 | 10 | 7 | 6 | 3.5 | 18 |
| 20 | 43 | 6 | 37 | 10.5 | 35.5 | 10 | M6×1.0 | 14 | 9 | 9 | 4.5 | 22 |
| 25 | 45 | 6 | 39 | 11 | 40 | 10 | M6×1.0 | 14 | 9 | 9 | 4.5 | 26 |
| 32 | 51 | 7 | 44 | 14 | 49.5 | 12 | M8×1.25 | 16 | 10 | 9 | 4.5 | 32.5 |
| 40 | 52.5 | 7 | 45.5 | 14.5 | 55 | 12 | M8×1.25 | 16 | 10 | 9 | 4.5 | 38 |
| 50 | 53.5 | 8 | 45.5 | 14.5 | 65.5 | 16 | M10×1.5 | 20 | 13 | 11 | 4.5 | 46.5 |
| 63 | 57 | 8 | 49 | 15 | 75.5 | 16 | M10×1.5 | 20 | 13 | 11 | 4.5 | 56.5 |

| Bore/Symbol | K | KA | P | PA | PB | R | RA | T | TA |
|---|---|---|---|---|---|---|---|---|---|
| 12 | M4×0.7 | 18.5 | M5×0.8 | 5.5 | 2 | 3.5 | 1.5 | 9 | 2.1 |
| 16 | M4×0.7 | 18.5 | M5×0.8 | 5.5 | 2 | 4.5 | 1.5 | 9 | 2.1 |
| 20 | M5×0.8 | 23.5 | M5×0.8 | 6 | 2 | 6.5 | 2.5 | 9 | 2.1 |
| 25 | M5×0.8 | 23.5 | M5×0.8 | 6 | 2 | 6.5 | 2.5 | 9 | 2.1 |
| 32 | M6×1.0 | 28.5 | PT1/8" | 7.5 | 3 | 8.5 | 3.5 | 9 | 2.1 |
| 40 | M6×1.0 | 28.5 | PT1/8" | 7.5 | 3 | 8.5 | 3.5 | 9 | 2.1 |
| 50 | M8×1.25 | 30.5 | PT1/8" | 7.5 | 3 | 10.5 | 4.5 | 12 | 2.6 |
| 63 | M8×1.25 | 30.5 | PT1/8" | 7.5 | 4 | 10.5 | 4.5 | 12 | 2.6 |

Notes:With or without magnet, the dimensions are the same..

### ACE Standard Dimensions

■ Φ80~Φ125

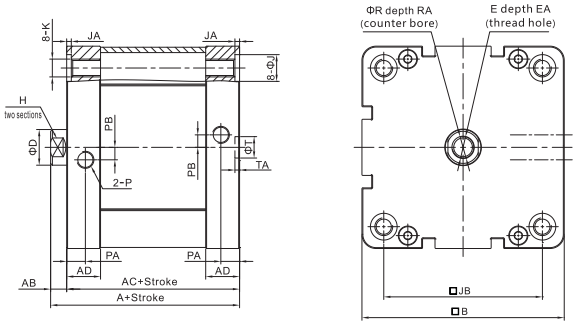


| Bore/Symbol | A | AB | AC | AD | B | D | E | EA | H | J | JA | JB |
|---|---|---|---|---|---|---|---|---|---|---|---|---|
| 80 | 63 | 9 | 54 | 16 | 95.5 | 20 | M12×1.75 | 20 | 17 | 15 | 2.5 | 72 |
| 100 | 76 | 9 | 67 | 19 | 113.5 | 20 | M12×1.75 | 20 | 17 | 15 | 2.5 | 89 |
| 125 | 92 | 11 | 81 | 20 | 134.5 | 25 | M16×2.0 | 25 | 21 | - | - | 110 |

| Bore/Symbol | K | P | PA | PB | R | RA | T | TA |
|---|---|---|---|---|---|---|---|---|
| 80 | M10×1.5 | PT1/8" | 8.5 | 6 | 12.5 | 6 | 12 | 2.6 |
| 100 | M10×1.5 | PT1/8" | 10.5 | 7 | 12.5 | 6 | 12 | 2.6 |
| 125 | M12×1.75 | PT1/4" | 10.5 | 8 | 16.5 | 7 | 12 | 2.6 |

Notes:With or without magnet, the dimensions are the same..

### ACED Standard Dimensions

■ Φ12~Φ125

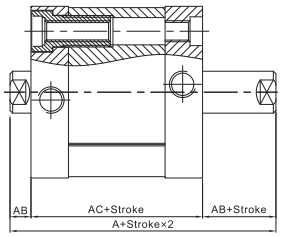


### ACEJ Standard Dimensions

■ Φ12~Φ125

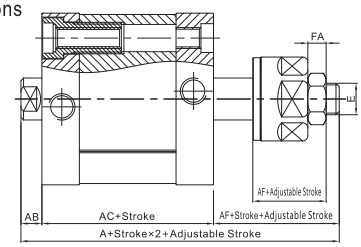


| Bore/Symbol | A(ACED) | A(ACEJ) | AB | AC | AF | FA | E |
|---|---|---|---|---|---|---|---|
| 12 | 45 | 57 | 5 | 35 | 17 | 4 | M5×0.8 |
| 16 | 45 | 61 | 5 | 35 | 21 | 5 | M6×1.0 |
| 20 | 49 | 68 | 6 | 37 | 25 | 6 | M8×1.25 |
| 25 | 51 | 70 | 6 | 39 | 25 | 6 | M8×1.25 |
| 32 | 58 | 78 | 7 | 44 | 27 | 6 | M10×1.25 |
| 40 | 59.5 | 79.5 | 7 | 45 | 27 | 6 | M10×1.25 |
| 50 | 61.5 | 81.5 | 8 | 45 | 28 | 7 | M12×1.25 |
| 63 | 65 | 85 | 8 | 49 | 28 | 7 | M12×1.25 |
| 80 | 72 | 92 | 9 | 54 | 29 | 8 | M16×1.5 |
| 100 | 85 | 105 | 9 | 67 | 29 | 8 | M16×1.5 |
| 125 | 103 | 127.5 | 11 | 81 | 35 | 10 | M20×1.5 |

# Double Shaft Cylinder

## Specification:

| Type | 10 | 16 | 20 | 25 | 32 |
|---|---|---|---|---|---|
| Motion | Double acting | | | | |
| Fluid | Compressed air | | | | |
| Working pressure range (MPa) | 0.1~1 | | | | |
| Warrant endure-pressure (MPa) | 1 | | | | |
| Ambient temperature range (℃) | -5~60 | | | | |
| Speed range (mm/s) | 100~500 | | | | |
| Stroke adjustable(mm) | -10~0 | | | | |
| Cushion | Bumper | | | | |
| Port size | M5×0.8 | | | | 1/8" |

## Symbol:

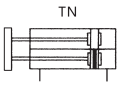


## How to order:

**TN 20×50 S**

- Specification: TN: Double Shaft Cylinder
- Bore: Φ10, Φ16, Φ20, Φ25, Φ32
- Stroke
- Magnet code:
  - S1:with magnet + 1pc magnet switch
  - S2:with magnet + 2pc magnet switch
  - S3:heat resisting seal ring, max temp.150℃
  - S4:acid resisting piston rod

## Theroretic force output fomulate:

$$F=2\times P\times A$$

- A — Piston area pressured(cm²)
- P — Operating pressure(kgf/cm²)
- F — Theroretic force output(kgf)

## Stroke:

| Bore(mm) | Standard Stroke | Max. Stroke | Stroke Permitted |
|---|---|---|---|
| 10 | 10 20 30 40 50 60 70 | 70 | 100 |
| 16 | 10 20 30 40 50 60 70 80 90 100 125 150 | 150 | 200 |
| 20 | 10 20 30 40 50 60 70 80 90 100 125 150 | 150 | 200 |
| 25 | 10 20 30 40 50 60 70 80 90 100 125 150 | 150 | 200 |
| 32 | 10 20 30 40 50 60 70 80 90 100 125 150 | 150 | 200 |

## Product feature:

1. Double piston rods make good anti–bend and torsion, warrant its life and preeminent guiding performance.
2. Assemble the groove in advance,make it easier when assemble,set and adjust sensor switch.
3. No need parts and save the space.
4. Has simple design and easy naitenance and disassembly.

## Theroretic force output fig:

| Bore(mm) | Piston rod dia. (mm) | Acting type | | Compressed area (cm²) | Air pressure(kgf/cm²) 1 | 2 | 3 | 4 | 5 | 6 | 7 |
|---|---|---|---|---|---|---|---|---|---|---|---|
| 10 | 6 | Double acting | Push side | 1.57 | - | 3.14 | 4.70 | 6.28 | 7.84 | 9.42 | 10.98 |
| | | | Draw side | 1.00 | - | 2.00 | 3.00 | 4.00 | 5.00 | 6.00 | 7.00 |
| 16 | 8 | Double acting | Push side | 4.02 | 4.02 | 8.04 | 12.06 | 16.08 | 20.10 | 24.12 | 28.14 |
| | | | Draw side | 3.01 | 3.01 | 6.02 | 9.03 | 12.04 | 15.05 | 18.06 | 21.07 |
| 20 | 10 | Double acting | Push side | 6.28 | 6.28 | 12.56 | 18.84 | 25.12 | 31.40 | 37.68 | 43.96 |
| | | | Draw side | 4.71 | 4.71 | 9.42 | 14.13 | 18.84 | 23.55 | 28.26 | 32.97 |
| 25 | 12 | Double acting | Push side | 9.81 | 9.81 | 19.62 | 29.43 | 39.24 | 49.05 | 58.86 | 68.67 |
| | | | Draw side | 7.55 | 7.55 | 15.10 | 22.65 | 30.20 | 37.75 | 45.30 | 52.85 |
| 32 | 16 | Double acting | Push side | 16.07 | 16.07 | 32.14 | 48.21 | 64.28 | 80.35 | 96.42 | 112.49 |
| | | | Draw side | 12.05 | 12.05 | 24.10 | 36.15 | 48.20 | 60.25 | 72.30 | 84.35 |

## Mounting type:

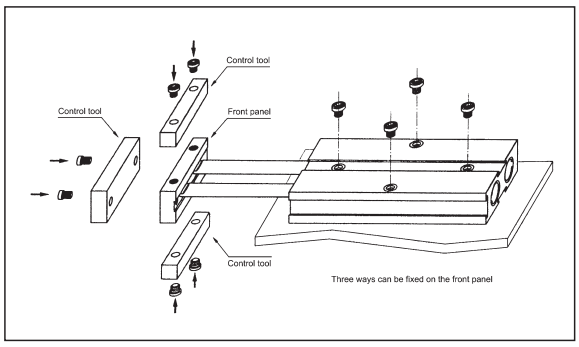

# Double Shaft Cylinder

## Dimension(mm):

### Φ10

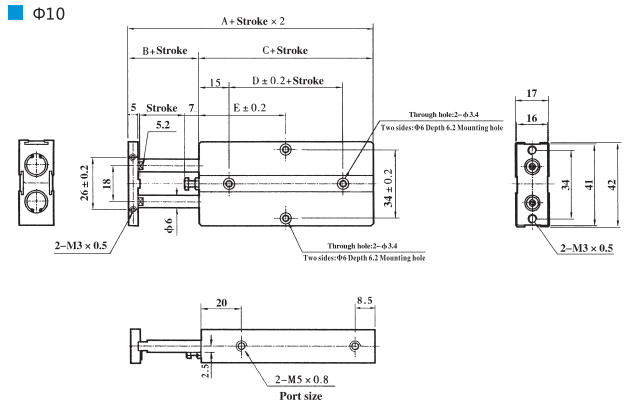


| Symbol / Bore/Symbol | A | B | C | D | E | | | | | | |
|---|---|---|---|---|---|---|---|---|---|---|---|
| | | | | | 10 | 20 | 30 | 40 | 50 | 60 | 70 |
| 10 | 58 | 12 | 46 | 10 | 30 | 30 | 35 | 40 | 45 | 50 | 55 |

### Φ32

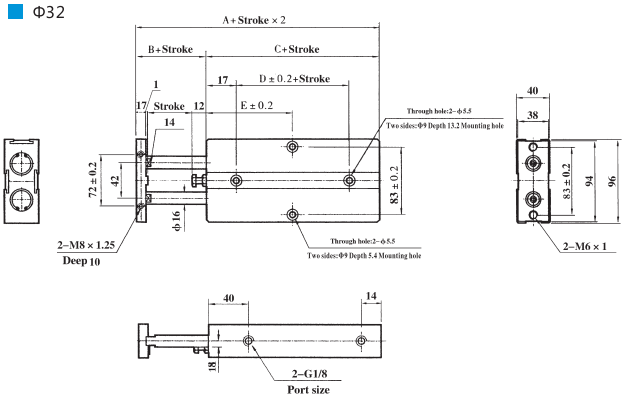


| Symbol / Bore/Symbol | A | B | C | D | E | | | | | | | | | | | |
|---|---|---|---|---|---|---|---|---|---|---|---|---|---|---|---|---|
| | | | | | 10 | 20 | 30 | 40 | 50 | 60 | 70 | 80 | 90 | 100 | 125 | 150 |
| 32 | 108 | 30 | 78 | 35 | 45 | 50 | 55 | 60 | 65 | 70 | 75 | 80 | 85 | 90 | 102.5 | 115 |

### Φ16~Φ25

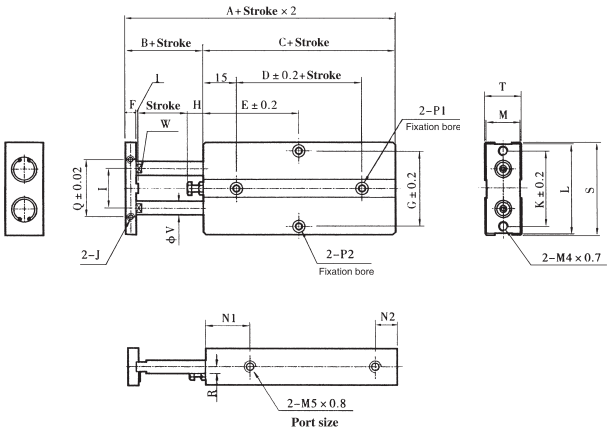


| Symbol / Bore/Symbol | A | B | C | D | E | | | | | | | | | | | | F | G | H | I |
|---|---|---|---|---|---|---|---|---|---|---|---|---|---|---|---|---|---|---|---|---|
| | | | | | 10 | 20 | 30 | 40 | 50 | 60 | 70 | 80 | 90 | 100 | 125 | 150 | | | | |
| 16 | 68 | 15 | 53 | 20 | 30 | 35 | 40 | 45 | 50 | 55 | 60 | 65 | 70 | 75 | 87.5 | 100 | 8 | 47 | 6 | 24 |
| 20 | 78 | 20 | 58 | 20 | 35 | 35 | 40 | 45 | 50 | 55 | 60 | 65 | 70 | 75 | 87.5 | 100 | 10 | 55 | 9 | 28 |
| 25 | 81 | 19 | 62 | 30 | 40 | 40 | 45 | 50 | 55 | 60 | 65 | 70 | 75 | 80 | 92.5 | 105 | 10 | 66 | 8 | 34 |

| Bore/Symbol | J | K | L | M | N1 | N2 | P1 | P2 | Q | R | S | T | V | W |
|---|---|---|---|---|---|---|---|---|---|---|---|---|---|---|
| 16 | M4×0.7depth5mm | 47 | 53 | 20 | 22 | 11 | Double: Φ7.5depth7.2mm Clearance: Φ4.5 | Double: Φ8depth5mm Clearance: Φ4.5 | 34 | 4 | 54 | 21 | 8 | 6.2 |
| 20 | M4×0.7depth5mm | 55 | 61 | 24 | 25 | 12 | Double: Φ7.5depth7.2mm Clearance: Φ4.5 | Double: Φ8depth5mm Clearance: Φ4.5 | 44 | 6 | 62 | 25 | 10 | 8.2 |
| 25 | M4×0.7depth6mm | 66 | 72 | 29 | 27 | 12 | Double: Φ7.5depth7.2mm Clearance: Φ4.5 | Double: Φ8depth5mm Clearance: Φ4.5 | 56 | 7 | 73 | 30 | 12 | 10.2 |

### Front board dimension

#### Φ10~Φ32

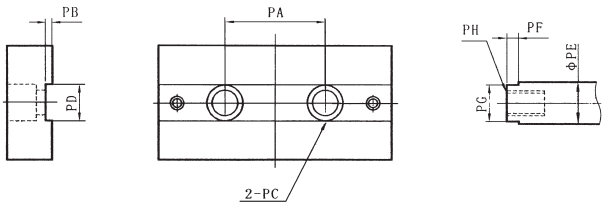


| Bore/Symbol | PA | PB | PC | PD | PE | PF | PG | PH |
|---|---|---|---|---|---|---|---|---|
| 10 | 18 | 0.7 | Double: Φ6.2depth3.5mm,Clearance: Φ4.5 | 5.2 | 6 | 3 | 5.2 | M3×0.5depth5mm |
| 16 | 24 | 1 | Double: Φ7.8depth4.6mm,Clearance: Φ4.5 | 6.2 | 8 | 3 | 6.2 | M4×0.7depth6mm |
| 20 | 28 | 1 | Double: Φ11depth6.8mm,Clearance: Φ4.5 | 8.2 | 10 | 3 | 8.2 | M6×1depth8mm |
| 25 | 34 | 1 | Double: Φ11depth6.8mm,Clearance: Φ4.5 | 10.2 | 12 | 3 | 10.2 | M6×1depth8mm |
| 32 | 42 | 2 | Double: Φ17depth12mm,Clearance: Φ4.5 | 14 | 16 | 3 | 14 | M8×1.25depth14mm |

# Double Shaft Cylinder

## Specification:

| Type | 6 | 10 | 15 | 20 | 25 | 32 |
|---|---|---|---|---|---|---|
| Motion | Double acting | | | | | |
| Fluid | Compressed air | | | | | |
| Working Pressure (MPa) | 0.1~1 | | | | | |
| Warrant endure-pressure (MPa) | 1 | | | | | |
| Ambient temperature range (℃) | -5~60 | | | | | |
| Speed range (mm/s) | 100~500 | | | | | |
| Stroke adjustable (mm) | -10~0 | | | | | |
| Cushion | Bumper | | | | | |
| Port size | M5×0.8 | | | | 1/8" | |

## Symbol:

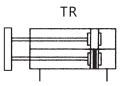


## How to order:

**CXS 20×50 S**

- Specification: CXS: Double Shaft Cylinder
- Bore: Φ6, Φ10, Φ15, Φ20, Φ25, Φ32
- Stroke
- Magnet code: Blank: without magnet; S: with magnet

## Product feature:

CXS

1. Embedded type body installs fixed forms to save installation space.
2. With a certain bending and torsion resistance, it can bear a certain side load.
3. The three sides of the fixed plate all install holes to help multiposition loading conveniently.
4. The front fenders can adjust cylinders' stroke and ease the impact.
5. The standard configuration for cylinder is with magnet attached. Without magnet is not optional.

## Stroke:

| Bore(mm) | Standard Stroke | Max. Stroke |
|---|---|---|
| 6 | 10 20 30 40 50 | 50 |
| 10 | 10 20 30 40 50 60 70 80 90 100 | 100 |
| 16 | 10 20 30 40 50 60 70 80 90 100 125 150 175 200 | 200 |
| 20 | 10 20 30 40 50 60 70 80 90 100 125 150 175 200 | 200 |
| 25 | 10 20 30 40 50 60 70 80 90 100 125 150 175 200 | 200 |
| 32 | 10 20 30 40 50 60 70 80 90 100 125 150 175 200 | 200 |

## Mounting type

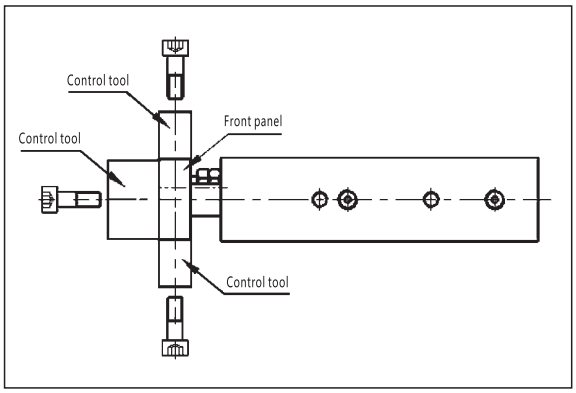


## Inner structure drawing:

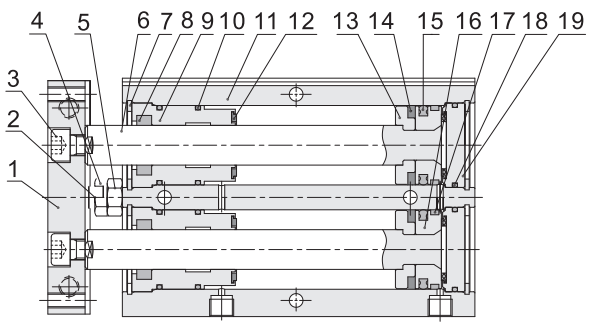


| Number | Name | Number | Name | Number | Name |
|---|---|---|---|---|---|
| 1 | Fixed plate | 8 | Dustproof sealing ring | 15 | Sealing ring |
| 2 | Fenders | 9 | Front cover | 16 | Piston |
| 3 | Hexagon socket cap screws | 10 | O-ring | 17 | Wear-resistant belt |
| 4 | Adjustable bolt | 11 | Cylinder barrel | 18 | O-ring |
| 5 | Hexagonal nut | 12 | Anti-collision gasket | 19 | Rear cover |
| 6 | Piston rod | 13 | Magnet seat | | |
| 7 | Circlip for hole | 14 | Magnet | | |

# Double Shaft Cylinder

## Dimension(mm):

### Φ6

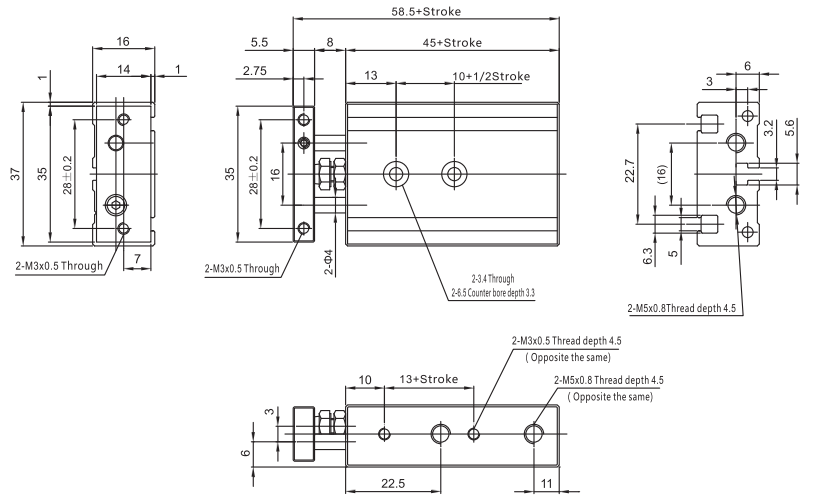


### Φ10~Φ32

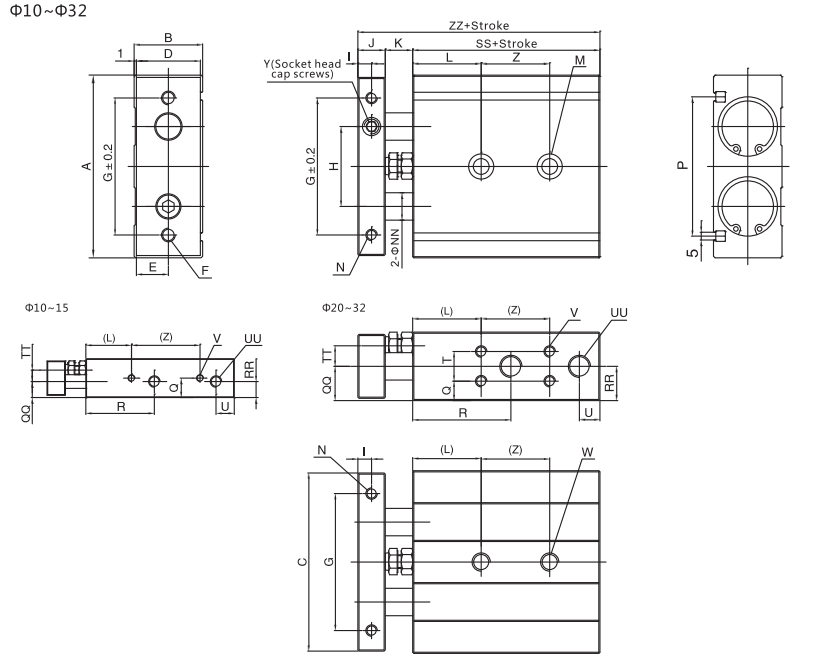


| Bore/Symbol | A | B | C | D | E | F | G | H | I | J | K | L | M | N | NN | P | Q | QQ | R | RR | S | T |
|---|---|---|---|---|---|---|---|---|---|---|---|---|---|---|---|---|---|---|---|---|---|---|
| 10 | 46 | 17 | 44 | 15 | 7.5 | 2-M4x0.7 Through hole | 35 | 20 | 4 | 8 | 8 | 20 | 2-Φ3.4 Through hole,Counter boreΦ6.5 depth 3.3 | 2-M3×0.5 Thread depth 5 | 6 | 33.6 | 8.5 | 7 | 30 | 7 | 55 | — |
| 15 | 58 | 20 | 56 | 18 | 9 | 2-M5x0.8 Through hole | 45 | 25 | 5 | 10 | 10 | 30 | 2-Φ4.3 Through hole,Counter boreΦ8 depth 4.4 | 2-M4×0.7 Thread depth 6 | 8 | 48 | 10 | 10 | 38.5 | 10 | 60 | — |
| 20 | 64 | 25 | 62 | 23 | 11.5 | 2-M6x1 Through hole | 50 | 28 | 6 | 12 | 12 | 30 | 2-Φ5.5 Through hole,Counter boreΦ9.5 depth 5.3 | 2-M4×0.7 Thread depth 6 | 10 | 53 | 7.75 | 12.5 | 45 | 7.75 | 70 | 9.5 |
| 25 | 80 | 30 | 78 | 28 | 14 | 2-M6x1 Through hole | 60 | 35 | 6 | 12 | 12 | 30 | 2-Φ6.9 Through hole,Counter boreΦ11 depth 6.3 | 2-M5×0.8 Thread depth 7.5 | 12 | 64 | 8.5 | 15 | 46 | 15 | 72 | 13 |
| 32 | 98 | 38 | 96 | 36 | 18 | 2-M6x1 Through hole | 75 | 44 | 8 | 14 | 14 | 30 | 2-Φ6.9 Through hole,Counter boreΦ11 depth 6.3 | 2-M5×0.8 Thread depth 8 | 16 | 76 | 9 | 19 | 56 | 19 | 82 | 20 |

| Bore/Symbol / Stroke | TT | U | UU | V | W | Y | Z | | | ZZ |
|---|---|---|---|---|---|---|---|---|---|---|
| | | | | | | | 10~20 | 30~50 | 75~100 | |
| 10 | 5 | 8 | 4-M5×0.8 depth 5(Opposite the same) | 4-M3×0.5 depth 4.5(Opposite the same) | 2-M4×0.7 Thread depth 7 | M3×0.5 | 30 | 40 | — | 72 |
| 15 | 5 | 8 | 4-M5×0.8 depth 5(Opposite the same) | 4-M4×0.7 depth 5(Opposite the same) | 2-M4×0.7 Thread depth 7 | M4×0.7 | 25 | 35 | — | 79 |
| 20 | 6.5 | 8 | 4-M5×0.8 depth 6.5(Opposite the same) | 8-M4×0.7 depth 6(Opposite the same) | 2-M6×1 Thread depth 10 | M5×0.8 | 30 | 40 | 60 | 94 |
| 25 | 9 | 9 | 4-PT 1/8 depth 6.5(Opposite the same) | 8-M5×0.8 depth 7.5(Opposite the same) | 2-M8×1.25 Thread depth 12 | M6×1 | 30 | 40 | 60 | 96 |
| 32 | 11.5 | 10 | 4-PT 1/8 depth 6.5(Opposite the same) | 8-M5×0.8 depth 5(Opposite the same) | 2-M8×1.25 Thread depth 12 | M8×1.25 | 40 | 50 | 70 | 112 |

# Three Shaft Cylinder

## Specification:

| Type | 12 | 16 | 20 | 25 | 32 | 40 | 50 | 63 |
|---|---|---|---|---|---|---|---|---|
| Motion | Double acting | | | | | | | |
| Fluid | Compressed air | | | | | | | |
| Working Pressure (MPa) | 0.1~1 | | | | | | | |
| Warrant endure-pressure (MPa) | 1.5 | | | | | | | |
| Ambient temperature range (℃) | -20~70 | | | | | | | |
| Speed range (mm/s) | 30~500 | | | | | | | |
| Cushion | Bumper | | | | | | | |
| Port size | M5×0.8 | | 1/8" | | | | 1/4" | |

## How to order:

**MGP M 50×50 S**

- Specification: MGP: Three Shaft Cylinder
- Bearing code: M: Copper sleeve bearings; L: Linear bearings
- Bore: Φ12, Φ16, Φ20, Φ25, Φ32, Φ40, Φ50, Φ63
- Stroke
- Magnet code: S: with magnet

## Symbol:

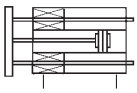

## Product feature:

MGP

1. Execute JIS standard.
2. Two guide rods made of special bearing steel are guiding through linear bearing or bronze bearing with high torsion and lateral loading resistance.
3. The driver element and guiding element are in the same body with no extra accessory, smallest need of space, input port optional and more convenient installation.
4. The bottom and rear of the body and fixed plate are all equipped with two accurate dowel holes to supply higher accuracy of positioning installation in a place of higher requirement on accuracy.
5. Four magnetic inductive switch grooves are on the body to supply various installation ways for indu–ctive switch.
6. Special design on the body supply multidirectional installation of fixed type.

## Inner structure drawing:

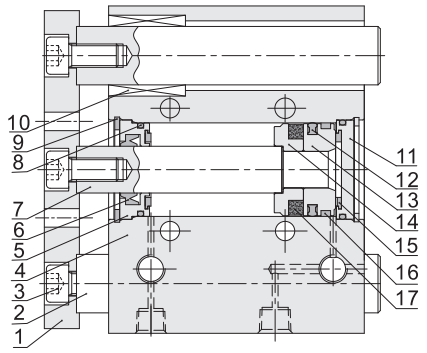


| Number | Name | Number | Name |
|---|---|---|---|
| 1 | Fixed plate | 10 | Linear bearings/Copper sleeve bearings |
| 2 | Guide rod | 11 | Rear cover |
| 3 | Hexagon socket cap screws | 12 | Sealing ring |
| 4 | Cylinder barrel | 13 | Piston |
| 5 | Front cover | 14 | Magnet seat |
| 6 | Dustproof sealing ring | 15 | Fenders |
| 7 | Piston rod | 16 | Wear-resistant belt |
| 8 | O-ring | 17 | Magnet |
| 9 | Retaining ring for hole | | |

# Three Shaft Cylinder

## Dimension(mm):

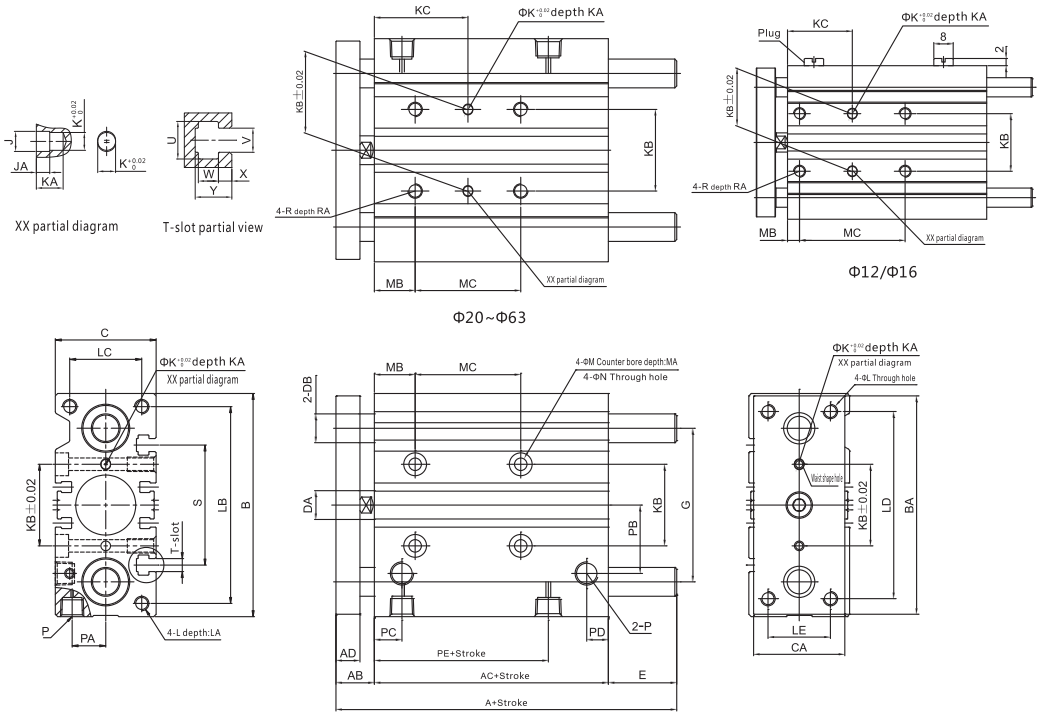

MGP

| Symbol | A | | | | | | | | E | | | | | | | | MC | | | | KC | | | |
|---|---|---|---|---|---|---|---|---|---|---|---|---|---|---|---|---|---|---|---|---|---|---|---|---|
| Bore | MGPM | | | | MGPL | | | | MGPM | | | | MGPL | | | | | | | | | | | |
| Stroke | ≤50 | 51~100 | 101~200 | >200 | ≤30 | 31~100 | 101~200 | >200 | ≤50 | 51~100 | 101~200 | >200 | ≤30 | 31~100 | 101~200 | >200 | ≤30 | 31~100 | 101~200 | >200 | ≤30 | 31~100 | 101~200 | >200 |
| 12 | 42 | 60.5 | 82.5 | 82.5 | 43 | 55 | 84.5 | 84.5 | 0 | 18.5 | 40.5 | 40.5 | 1 | 13 | 42.5 | 42.5 | 20 | 40 | 110 | 200 | 15 | 25 | 60 | 105 |
| 16 | 46 | 64.5 | 92.5 | 92.5 | 49 | 65 | 94.5 | 94.5 | 0 | 18.5 | 46.5 | 46.5 | 3 | 19 | 48.5 | 48.5 | 24 | 44 | 110 | 200 | 17 | 27 | 60 | 105 |
| 20 | 53 | 77.5 | 77.5 | 110 | 59 | 76 | 100 | 117.5 | 0 | 24.5 | 24.5 | 57 | 6 | 23 | 47 | 64.5 | 24 | 44 | 120 | 200 | 29 | 39 | 77 | 117 |
| 25 | 53.5 | 77.5 | 77.5 | 109.5 | 65.5 | 81.5 | 100.5 | 117.5 | 0 | 24 | 24 | 56 | 12 | 28 | 47 | 64 | 24 | 44 | 120 | 200 | 29 | 39 | 77 | 117 |
| Stroke | ≤50 | 51~100 | 101~200 | >200 | ≤50 | 51~100 | 101~200 | >200 | ≤50 | 51~100 | 101~200 | >200 | ≤50 | 51~100 | 101~200 | >200 | ≤25 | 26~100 | 101~200 | >200 | ≤25 | 26~100 | 101~200 | >200 |
| 32 | 75 | 93.5 | 93.5 | 129.5 | 79.5 | 96.5 | 116.5 | 138.5 | 15.5 | 34 | 34 | 70 | 20 | 37 | 57 | 79 | 24 | 48 | 124 | 200 | 33 | 45 | 83 | 121 |
| 40 | 75 | 93.5 | 93.5 | 129.5 | 79.5 | 96.5 | 116.5 | 138.5 | 9 | 27.5 | 27.5 | 63.5 | 13.5 | 30.5 | 50.5 | 72.5 | 24 | 48 | 124 | 200 | 34 | 46 | 84 | 122 |
| 50 | 88.5 | 109.5 | 109.5 | 150.5 | 91.5 | 112.5 | 132.5 | 159.5 | 16.5 | 37.5 | 37.5 | 78.5 | 19.5 | 40.5 | 60.5 | 87.5 | 24 | 48 | 124 | 200 | 36 | 48 | 86 | 124 |
| 63 | 88.5 | 109.5 | 109.5 | 150.5 | 91.5 | 112.5 | 132.5 | 159.5 | 11.5 | 32.5 | 32.5 | 73.5 | 14.5 | 35.5 | 55.5 | 82.5 | 28 | 52 | 128 | 200 | 38 | 50 | 88 | 124 |

| Bore/Symbol | AB | AC | AD | B | BA | C | CA | DA | DB(MGPM) | DB(MGPL) | G | J | JA | K | KA | KB | L | LA | LB | LC | LD |
|---|---|---|---|---|---|---|---|---|---|---|---|---|---|---|---|---|---|---|---|---|---|
| 12 | 13 | 29 | 8 | 58 | 56 | 26 | 22 | 6 | 8 | 6 | 41 | 3.5 | 3 | 3 | 6 | 23 | M4x0.7 | 10 | 50 | 18 | 48 |
| 16 | 13 | 33 | 8 | 64 | 62 | 30 | 25 | 8 | 10 | 8 | 46 | 3.5 | 3 | 3 | 6 | 24 | M5x0.8 | 12 | 56 | 22 | 54 |
| 20 | 16 | 37 | 10 | 83 | 81 | 36 | 30 | 10 | 12 | 10 | 54 | 3.5 | 3 | 3 | 6 | 28 | M5x0.8 | 13 | 72 | 24 | 70 |
| 25 | 16 | 37.5 | 10 | 93 | 91 | 42 | 38 | 10 | 16 | 10 | 64 | 4.5 | 3 | 4 | 6 | 34 | M6x1.0 | 15 | 82 | 30 | 78 |
| 32 | 22 | 37.5 | 12 | 112 | 110 | 48 | 44 | 16 | 20 | 16 | 78 | 4.5 | 3 | 4 | 6 | 42 | M8x1.25 | 20 | 98 | 34 | 96 |
| 40 | 22 | 44 | 12 | 120 | 118 | 54 | 44 | 16 | 20 | 16 | 86 | 4.5 | 3 | 4 | 6 | 50 | M8x1.25 | 20 | 106 | 40 | 104 |
| 50 | 28 | 44 | 16 | 148 | 146 | 64 | 60 | 20 | 25 | 20 | 110 | 6 | 4 | 5 | 8 | 66 | M10x1.5 | 22 | 130 | 46 | 130 |
| 63 | 28 | 49 | 16 | 162 | 158 | 78 | 70 | 20 | 25 | 20 | 124 | 6 | 4 | 5 | 8 | 80 | M10x1.5 | 22 | 142 | 58 | 130 |

| Bore/Symbol | LE | M | MA | MB | N | P | PA | PB | PC | PD | PE | R | RA | S | U | V | W | X | Y |
|---|---|---|---|---|---|---|---|---|---|---|---|---|---|---|---|---|---|---|---|
| 12 | 14 | 8 | 4.5 | 5 | 4.5 | M5x0.8 | 8 | 18 | 11 | 7.5 | 13 | M5x0.8 | 10 | 37 | 7.5 | 4.5 | 4 | 2 | 6.5 |
| 16 | 16 | 8 | 4.5 | 5 | 4.5 | M5x0.8 | 10 | 19 | 11 | 8 | 15 | M5x0.8 | 10 | 38 | 7.5 | 4.5 | 4 | 2.5 | 7 |
| 20 | 18 | 9.5 | 5.5 | 17 | 5.5 | PT1/8" | 10.5 | 25 | 10.5 | 8.5 | 12.5 | M6x1.0 | 12 | 44 | 8.5 | 5.5 | 4.5 | 3 | 8 |
| 25 | 26 | 9.5 | 5.5 | 17 | 5.5 | PT1/8" | 13.5 | 30 | 11.5 | 9 | 12.5 | M6x1.0 | 12 | 50 | 8.5 | 5.5 | 4.5 | 3 | 8.5 |
| 32 | 30 | 11 | 7.5 | 21 | 6.5 | PT1/8" | 16 | 35.5 | 12.5 | 9 | 7 | M8x1.25 | 16 | 63 | 10.5 | 6.5 | 5.5 | 3.5 | 9.5 |
| 40 | 30 | 11 | 7.5 | 22 | 6.5 | PT1/8" | 18 | 39.5 | 14 | 10 | 13 | M8x1.25 | 16 | 72 | 10.5 | 6.5 | 5.5 | 4 | 11 |
| 50 | 40 | 14 | 9 | 24 | 8.5 | PT1/4" | 21.5 | 47 | 14 | 11 | 9 | M10x1.5 | 20 | 92 | 13.5 | 8.5 | 7.5 | 4.5 | 13.5 |
| 63 | 50 | 14 | 9 | 24 | 8.5 | PT1/4" | 28 | 58 | 16.5 | 13.5 | 14 | M10x1.5 | 20 | 110 | 18 | 11 | 10 | 7 | 18.5 |

# Multi–positional Fixed Cylinder

## Specification:

| Type | 6 | 10 | 16 | 20 | 25 | 32 |
|---|---|---|---|---|---|---|
| Motion | Double acting | | | | | |
| Series | CU, CUD, CUJ | | | | | |
| Fluid | Compressed air | | | | | |
| Working Pressure (MPa) | 0.1~1 | | | | | |
| Speed range (mm/s) | 50~800 | | | | | |
| Ambient temperature range (℃) | -20~80 | | | | | |
| Cushion | Bumper | | | | | |
| Port size | M5×0.8 | | | | | 1/8" |

## How to order:

**CU 32 × 30 S**

- Specification
  - CU: Multi-positional Fixed Cylinder
  - CUD: Double axial Multi-positional Fixed Cylinder
  - CUJ: Double axial adjustable Multi-positional Fixed Cylinder
- Bore
  - Φ6
  - Φ10
  - Φ16
  - Φ20
  - Φ25
  - Φ32
- Stroke
- Magnet code
  - Blank: without magnet
  - S: with magnet

## Symbol:

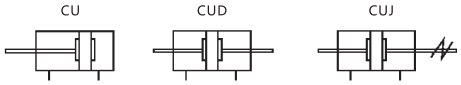


## Product feature:

1. The body with various fixed types is easy for install–ation and using.
2. Varieties of cylinders can be fixed together to save the installation space.
3. The piston rod has high guiding precision and no need of extra lubricant.
4. Various standard cylinders are optional for customers.
5. Choosing high temperature resistant seal materials to ensure cylinders can work normally under the temperature of 150℃.

## Inner structure drawing:

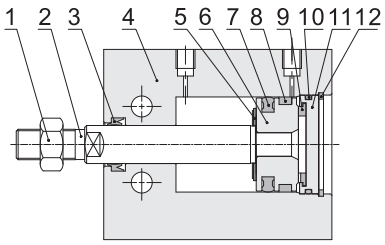


| Number | Name | Number | Name |
|---|---|---|---|
| 1 | Hexagonal nut | 7 | C-ring |
| 2 | Piston rod | 8 | Wear-resistant belt |
| 3 | Dustproof sealing ring | 9 | Fenders |
| 4 | Cylinder barrel | 10 | O-ring |
| 5 | Fenders | 11 | Rear cover |
| 6 | Piston | 12 | Circlip for hole |

# Multi–positional Fixed Cylinder

## Dimension(mm):

### CU Standard Dimension

■ Φ6~Φ32

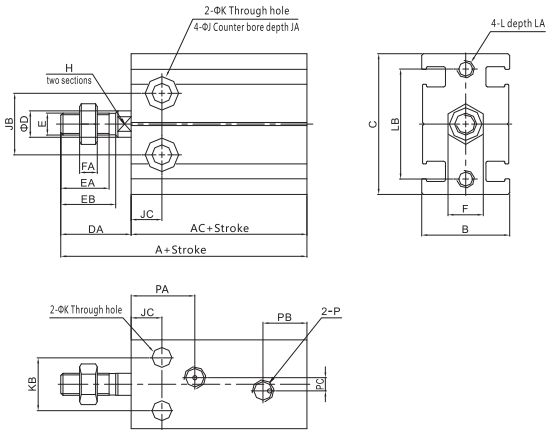


| Bore/Symbol | A(Without magnet) | A(With magnet) | AC(Without magnet) | AC(With magnet) | B | C | D | DA | E | EA | EB | F |
|---|---|---|---|---|---|---|---|---|---|---|---|---|
| 6 | 46 | 46 | 33 | 33 | 16.5 | 22 | 3 | 13 | M3×0.5 | 7 | 8 | 5.5 |
| 10 | 52 | 52 | 36 | 36 | 16.5 | 24 | 4 | 16 | M4×0.7 | 10 | 11 | 7 |
| 16 | 46 | 56 | 30 | 40 | 20 | 32 | 6 | 16 | M5×0.8 | 11 | 12.5 | 8 |
| 20 | 55 | 65 | 36 | 46 | 26 | 40 | 8 | 19 | M6×1.0 | 12 | 14 | 10 |
| 25 | 63 | 73 | 40 | 50 | 32 | 50 | 10 | 23 | M8×1.25 | 15.5 | 18 | 12 |
| 32 | 69 | 79 | 42 | 52 | 40 | 62 | 12 | 27 | M10×1.25 | 19.5 | 22 | 17 |

| Bore/Symbol | FA | H | J | JA | JB | JC | K | KB | L | LA | LB | P | PA | PB | PC |
|---|---|---|---|---|---|---|---|---|---|---|---|---|---|---|---|
| 6 | 2.5 | - | 6 | 5 | 10 | 7 | 3.3 | 7 | M3×0.5 | 5 | 17 | M5×0.8 | 14 | 10 | - |
| 10 | 2 | - | 6 | 5.5 | 11 | 7 | 3.3 | 9 | M3×0.5 | 5 | 18 | M5×0.8 | 15.5 | 10 | - |
| 16 | 4 | 5 | 7.5 | 6.5 | 14 | 7 | 4.5 | 12 | M4×0.7 | 5 | 25 | M5×0.8 | 14.5 | .10 | 3 |
| 20 | 5 | 6 | 9.5 | 8 | 16 | 9 | 5.5 | 16 | M5×0.8 | 7.5 | 30 | M5×0.8 | 19 | 11 | 9 |
| 25 | 6 | 8 | 9.5 | 9 | 20 | 10 | 5.5 | 20 | M5×0.8 | 8 | 38 | M5×0.8 | 21.5 | 8.5 | 12 |
| 32 | 6 | 10 | 11 | 11.5 | 24 | 11 | 6.5 | 24 | M6×1.0 | 9 | 48 | PT1/8" | 23 | 12.5 | 13 |

### CUD Standard Dimension

■ Φ6~Φ32

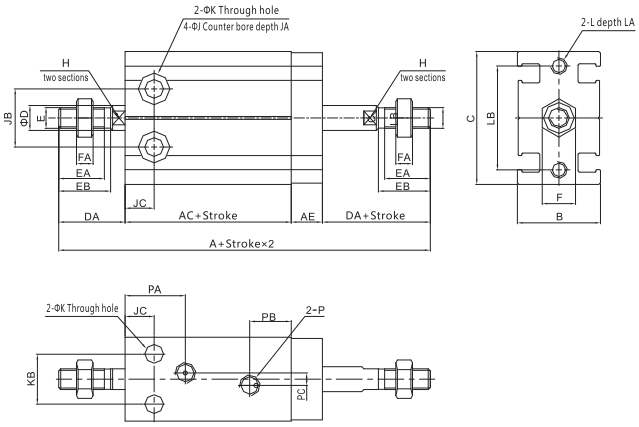


| Bore/Symbol | A(Without magnet) | A(With magnet) | AC(Without magnet) | AC(With magnet) | AE | B | C | D | DA | E | EA | EB | F |
|---|---|---|---|---|---|---|---|---|---|---|---|---|---|
| 6 | 70 | 70 | 38 | 38 | 6 | 16.5 | 22 | 3 | 13 | M3×0.5 | 7 | 8 | 5.5 |
| 10 | 74 | 74 | 36 | 36 | 6 | 16.5 | 24 | 4 | 16 | M4×0.7 | 10 | 11 | 7 |
| 16 | 69.5 | 79.5 | 30 | 40 | 7.5 | 20 | 32 | 6 | 16 | M5×0.8 | 11 | 12.5 | 8 |
| 20 | 83 | 93 | 36 | 46 | 9 | 26 | 40 | 8 | 19 | M6×1.0 | 12 | 14 | 10 |
| 25 | 95 | 105 | 40 | 50 | 9 | 32 | 50 | 10 | 23 | M8×1.25 | 15.5 | 18 | 12 |
| 32 | 106 | 116 | 42 | 52 | 10 | 40 | 62 | 12 | 27 | M10×1.25 | 19.5 | 22 | 17 |

| Bore/Symbol | FA | H | J | JA | JB | JC | K | KB | L | LA | LB | P | PA | PB | PC |
|---|---|---|---|---|---|---|---|---|---|---|---|---|---|---|---|
| 6 | 2.5 | - | 6 | 5 | 10 | 7 | 3.3 | 7 | M3×0.5 | 5 | 17 | M5×0.8 | 14 | 16 | - |
| 10 | 2 | - | 6 | 5.5 | 11 | 7 | 3.3 | 9 | M3×0.5 | 5 | 18 | M5×0.8 | 15.5 | 16 | - |
| 16 | 4 | 5 | 7.5 | 6.5 | 14 | 7 | 4.5 | 12 | M4×0.7 | 5 | 25 | M5×0.8 | 14.5 | 17.5 | 3 |
| 20 | 5 | 6 | 9.5 | 8 | 16 | 9 | 5.5 | 16 | M5×0.8 | 7.5 | 30 | M5×0.8 | 19 | 20 | 9 |
| 25 | 6 | 8 | 9.5 | 9 | 20 | 10 | 5.5 | 20 | M5×0.8 | 8 | 38 | M5×0.8 | 21.5 | 17.5 | 12 |
| 32 | 6 | 10 | 11 | 11.5 | 24 | 11 | 6.5 | 24 | M6×1.0 | 9 | 48 | PT1/8" | 23 | 22.5 | 13 |

### CUJ Standard Dimension

■ Φ6~Φ32

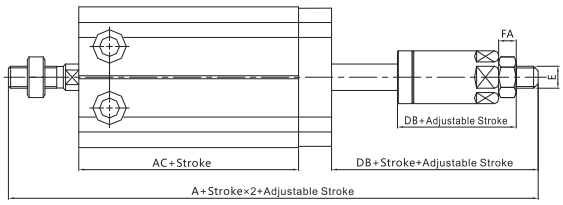


| Bore/Symbol | A(Without magnet) | A(With magnet) | AC(Without magnet) | AC(With magnet) | DB | E | FA |
|---|---|---|---|---|---|---|---|
| 6 | 70 | 70 | 38 | 38 | 13 | M3×0.5 | 2.5 |
| 10 | 73 | 73 | 36 | 36 | 15 | M4×0.7 | 2 |
| 16 | 70.5 | 80.5 | 30 | 40 | 17 | M5×0.8 | 4 |
| 20 | 85 | 95 | 36 | 46 | 21 | M6×1.0 | 5 |
| 25 | 97 | 107 | 40 | 50 | 25 | M8×1.25 | 6 |
| 32 | 106 | 116 | 42 | 52 | 27 | M10×1.25 | 6 |

Note: Unspecified dimensions are the same as standard.

# Multi–positional Fixed Cylinder

## Specification:

| Type | 6 | 10 | 16 | 20 | 25 | 32 |
|---|---|---|---|---|---|---|
| Motion | Double acting | | | | | |
| Series | CUK, CUKD, CUKJ | | | | | |
| Fluid | Compressed air | | | | | |
| Working Pressure (MPa) | 0.1~1 | | | | | |
| Speed range (mm/s) | 50~800 | | | | | |
| Ambient temperature range (℃) | -20~80 | | | | | |
| Cushion | Bumper | | | | | |
| Port size | M5×0.8 | | | | | 1/8" |

## How to order:

**MK 32 × 30 S**

- Specification
  - CUK: Multi-positional Fixed Cylinder
  - CUKD: Double axial Multi-positional Fixed Cylinder
  - CUKJ: Double axial adjustable Multi-positional Fixed Cylinder
- Bore
  - Φ6
  - Φ10
  - Φ16
  - Φ20
  - Φ25
  - Φ32
- Stroke
- Magnet code
  - Blank: without magnet
  - S: with magnet

## Symbol:

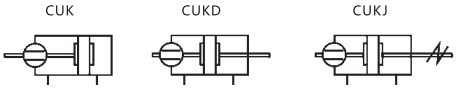

CUK

## Product feature:

1. The body with various fixed types is easy for install–ation and using.
2. Varieties of cylinders can be fixed together to save the installation space.
3. The piston rod has high guiding precision and no need of extra lubricant.
4. The fixed block of piston rod is equipped to prevent piston rod from rotation.
5. Various standard cylinders are optional for customers.
6. Choosing high temperature resistant seal materials to ensure cylinders can work normally under the temperature of 150℃.

## Inner structure drawing:

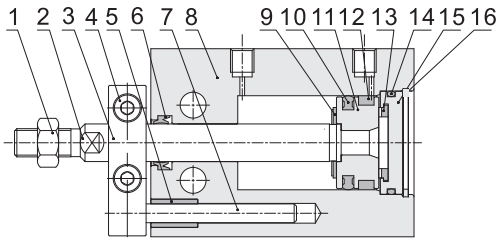


| Number | Name | Number | Name |
|---|---|---|---|
| 1 | Hexagonal nut | 9 | Fixed plate |
| 2 | Piston rod | 10 | Sealing ring |
| 3 | Fixed plate | 11 | Piston |
| 4 | Hexagon socket cap screws | 12 | Wearing ring |
| 5 | Axle sleeve | 13 | Fixed plate |
| 6 | Dustproof sealing ring | 14 | O-ring |
| 7 | Guide rod | 15 | Rear cover |
| 8 | Cylinder barrel | 16 | Circlip for hole |

# Multi–positional Fixed Cylinder

## Dimension(mm):

### CUK Standard Dimension

■ Φ6~Φ32

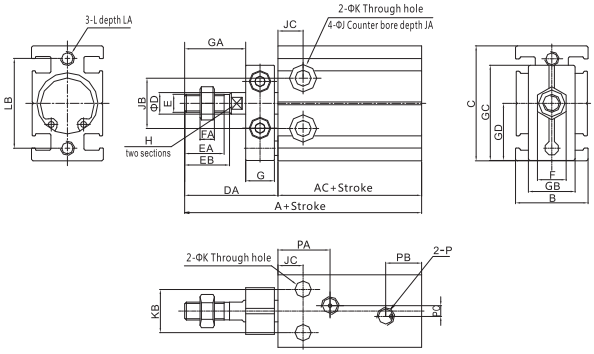


| Bore/Symbol | A(Without magnet) | A(With magnet) | AC(Without magnet) | AC(With magnet) | B | C | D | DA | E | EA | EB | F |
|---|---|---|---|---|---|---|---|---|---|---|---|---|
| 6 | 51 | 51 | 33 | 33 | 16.5 | 22 | 3 | 18 | M3×0.5 | 7 | 8 | 5.5 |
| 10 | 57 | 57 | 36 | 36 | 16.5 | 24 | 4 | 21 | M4×0.7 | 10 | 11 | 7 |
| 16 | 56 | 66 | 30 | 40 | 20 | 32 | 6 | 26 | M5×0.8 | 11 | 12.5 | 8 |
| 20 | 65 | 75 | 36 | 46 | 26 | 40 | 8 | 29 | M6×1.0 | 12 | 14 | 10 |
| 25 | 73 | 83 | 40 | 50 | 32 | 50 | 10 | 33 | M8×1.25 | 15.5 | 18 | 12 |
| 32 | 84 | 94 | 42 | 52 | 40 | 62 | 12 | 42 | M10×1.25 | 19.5 | 22 | 17 |

| Bore/Symbol | FA | G | GA | GB | GC | GD | H | J | JA | JB | JC | K | KB | L | LA | LB |
|---|---|---|---|---|---|---|---|---|---|---|---|---|---|---|---|---|
| 6 | 2.5 | 8 | 9 | 11 | 19 | 10.9 | - | 6 | 5 | 10 | 7 | 3.3 | 7 | M3×0.5 | 5 | 17 |
| 10 | 2 | 8 | 12 | 13 | 20.5 | 11.9 | - | 6 | 5.5 | 11 | 7 | 3.3 | 9 | M3×0.5 | 5 | 18 |
| 16 | 4 | 8 | 17 | 13 | 26.5 | 15.9 | 5 | 7.5 | 6.5 | 14 | 7 | 4.5 | 12 | M4×0.7 | 5 | 25 |
| 20 | 5 | 8 | 20 | 16 | 32 | 19.8 | 6 | 9.5 | 8 | 16 | 9 | 5.5 | 16 | M5×0.8 | 7.5 | 30 |
| 25 | 6 | 10 | 22 | 19 | 40 | 24.8 | 8 | 9.5 | 9 | 20 | 10 | 5.5 | 20 | M5×0.8 | 8 | 38 |
| 32 | 6 | 12 | 29 | 24 | 49 | 30.8 | 10 | 11 | 11.5 | 24 | 11 | 6.5 | 24 | M6×1.0 | 9 | 48 |

| Bore/Symbol | P | PA | PB | PC |
|---|---|---|---|---|
| 6 | M5×0.8 | 14 | 10 | - |
| 10 | M5×0.8 | 15.5 | 10 | - |
| 16 | M5×0.8 | 14.5 | .10 | 3 |
| 20 | M5×0.8 | 19 | 11 | 9 |
| 25 | M5×0.8 | 21.5 | 8.5 | 12 |
| 32 | PT1/8" | 23 | 12.5 | 13 |

### CUKD Standard Dimension

■ Φ6~Φ32

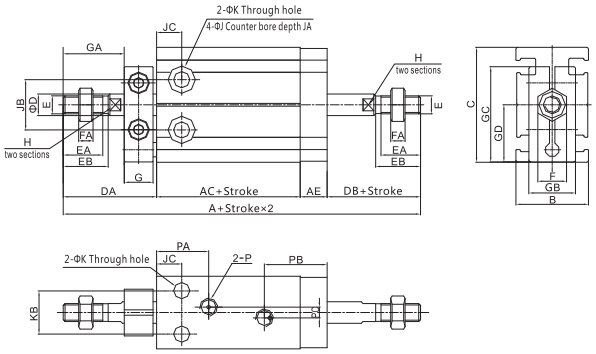


| Bore/Symbol | A(Without magnet) | A(With magnet) | AC(Without magnet) | AC(With magnet) | AE | B | C | D | DA | DB | E |
|---|---|---|---|---|---|---|---|---|---|---|---|
| 6 | 75 | 75 | 38 | 38 | 6 | 16.5 | 22 | 3 | 18 | 13 | M3×0.5 |
| 10 | 79 | 79 | 36 | 36 | 6 | 16.5 | 24 | 4 | 21 | 16 | M4×0.7 |
| 16 | 79.5 | 89.5 | 30 | 40 | 7.5 | 20 | 32 | 6 | 26 | 16 | M5×0.8 |
| 20 | 93 | 103 | 36 | 46 | 9 | 26 | 40 | 8 | 29 | 19 | M6×1.0 |
| 25 | 105 | 115 | 40 | 50 | 9 | 32 | 50 | 10 | 33 | 23 | M8×1.25 |
| 32 | 121 | 131 | 42 | 52 | 10 | 40 | 62 | 12 | 42 | 27 | M10×1.25 |

| Bore/Symbol | EA | EB | F | FA | G | GA | GB | GC | GD | H | J | JA | JB | JC | K | KB |
|---|---|---|---|---|---|---|---|---|---|---|---|---|---|---|---|---|
| 6 | 7 | 8 | 5.5 | 2.5 | 8 | 9 | 11 | 19 | 10.9 | - | 6 | 5 | 10 | 7 | 3.3 | 7 |
| 10 | 10 | 11 | 7 | 2 | 8 | 12 | 13 | 20.5 | 11.9 | - | 6 | 5.5 | 11 | 7 | 3.3 | 9 |
| 16 | 11 | 12.5 | 8 | 4 | 8 | 17 | 13 | 26.5 | 15.9 | 5 | 7.5 | 6.5 | 14 | 7 | 4.5 | 12 |
| 20 | 12 | 14 | 10 | 5 | 8 | 20 | 16 | 32 | 19.8 | 6 | 9.5 | 8 | 16 | 9 | 5.5 | 16 |
| 25 | 15.5 | 18 | 12 | 6 | 10 | 22 | 19 | 40 | 24.8 | 8 | 9.5 | 9 | 20 | 10 | 5.5 | 20 |
| 32 | 19.5 | 22 | 17 | 6 | 12 | 29 | 24 | 49 | 30.8 | 10 | 11 | 11.5 | 24 | 11 | 6.5 | 24 |

| Bore/Symbol | P | PA | PB | PC |
|---|---|---|---|---|
| 6 | M5×0.8 | 14 | 16 | - |
| 10 | M5×0.8 | 15.5 | 16 | - |
| 16 | M5×0.8 | 14.5 | 17.5 | 3 |
| 20 | M5×0.8 | 19 | 20 | 9 |
| 25 | M5×0.8 | 21.5 | 17.5 | 12 |
| 32 | PT1/8" | 23 | 22.5 | 13 |

### CUKJ Standard Dimension

■ Φ6~Φ32

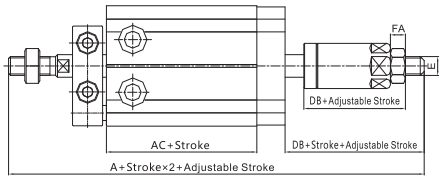


| Bore/Symbol | A(Without magnet) | A(With magnet) | AC(Without magnet) | AC(With magnet) | DB | E | FA |
|---|---|---|---|---|---|---|---|
| 6 | 75 | 75 | 38 | 38 | 13 | M3×0.5 | 2.5 |
| 10 | 78 | 78 | 36 | 36 | 14.7 | M4×0.7 | 2 |
| 16 | 80.5 | 90.5 | 30 | 40 | 17 | M5×0.8 | 4 |
| 20 | 95 | 105 | 36 | 46 | 21 | M6×1.0 | 5 |
| 25 | 107 | 117 | 40 | 50 | 25 | M8×1.25 | 6 |
| 32 | 121 | 131 | 42 | 52 | 27 | M10×1.25 | 6 |

Note: The unspecified dimension is the same as double shaft type.

# Small Free Installing Cylinder

## Specification:

| Type | 6 | 8 | 10 |
|---|---|---|---|
| Motion | Double acting | | |
| Series | MU | | |
| Fluid | Compressed air | | |
| Working Pressure (MPa) | 0.1~1 | | |
| Speed range (mm/s) | 50~800 | | |
| Ambient temperature range (℃) | -20~80 | | |
| Cushion | - | | |
| Port size | M3×0.5 | | |

## How to order:

**MU 8 × 10 S**

- Specification: MU: Small Free Installing Cylinder
- Bore: Φ6, Φ8, Φ10
- Stroke
- Magnet code: Blank: without magnet; S: with magnet

## Symbol:

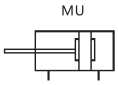

MU

## Product feature:

1. Execute JIS standard.
2. Body can be fixed from four directions and is easy for installation and using.
3. Varieties of cylinders can be fixed together to save the installation space.
4. The front of the cylinder with guiding convex platform is accurate and reliable for locating.
5. After inner diameter’s finishing machining, the cylinder body is hard oxidation treated with good wear durability.
6. Magnet is optional with position sensor fuction.
7. Inductive switch grooves are on the body to install inductive switches conveniently and flexibly.
8. The piston seal adopts special two–way sealing structure with compact size and oil storing function.

## Inner structure drawing:

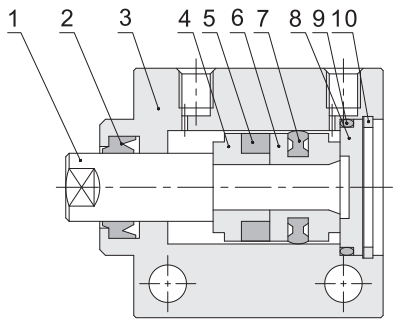


| Number | Name |
|---|---|
| 1 | Piston rod |
| 2 | Sealing ring |
| 3 | Cylinder barrel |
| 4 | Magnet seat |
| 5 | Magnet |
| 6 | Piston |
| 7 | Sealing element |
| 8 | Rear cover |
| 9 | O-ring |
| 10 | Circlip for hole |

## Small Free Installing Cylinder

### Dimension(mm):

MU Standard Dimension

■ Φ6~Φ10

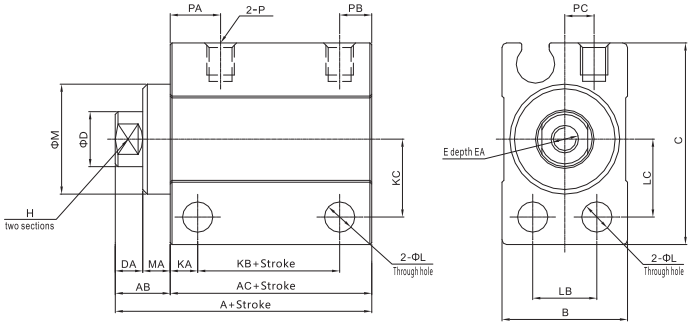


| Bore/Symbol | A(With magnet) | A(Without magnet) | AB | AC(With magnet) | AC(Without magnet) | B | C | D | DA | E | EA | H |
|---|---|---|---|---|---|---|---|---|---|---|---|---|
| 6 | 24 | 19 | 6 | 18 | 13 | 13 | 19 | 4 | 3 | M2.5×0.45 | 5 | 3.5 |
| 8 | 24 | 19 | 6 | 18 | 13 | 13 | 21 | 5 | 3 | M3×0.5 | 6 | 4.5 |
| 10 | 24 | 19 | 6 | 18 | 13 | 13.5 | 22 | 6 | 3 | M3×0.5 | 6 | 5 |

| Bore/Symbol | K | KA | KB(With magnet) | KB(Without magnet) | KC | L | LB | LC | M | KA | P | PA | PB | PC |
|---|---|---|---|---|---|---|---|---|---|---|---|---|---|---|
| 6 | 3.3 | 3 | 11.5 | 6.5 | 7 | 3.3 | 7 | 7 | 9 | 3 | M3×0.5 | 5.5 | 3.5 | 3 |
| 8 | 3.3 | 3 | 11.5 | 6.5 | 8 | 3.3 | 7 | 8 | 11 | 3 | M3×0.5 | 5.5 | 3.5 | 3 |
| 10 | 3.3 | 3 | 11.5 | 6.5 | 8.5 | 3.3 | 7 | 8.5 | 12 | 3 | M3×0.5 | 5.5 | 3.5 | 3.5 |

MU

MU–B

■ Φ6~Φ10

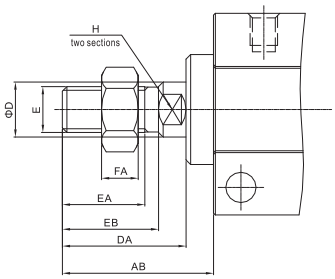


| Bore/Symbol | AB | D | DA | E | EA | EB | FA | H |
|---|---|---|---|---|---|---|---|---|
| 6 | 12.5 | 4 | 9.5 | M3×0.5 | 5.5 | 6.5 | 2.4 | 3.5 |
| 8 | 14.5 | 5 | 11.5 | M4×0.7 | 7 | 8.5 | 3 | 4.5 |
| 10 | 16.5 | 6 | 13.5 | M5×0.8 | 9 | 10.5 | 4 | 5 |

Note: The unspecified dimension is the same as Internal thread type.

# Panel Type Cylinder

## Specification:

| Type | 6 | 8 | 10 | 12 | 16 |
|---|---|---|---|---|---|
| Motion | Double acting | | | | |
| Series | MPG | | | | |
| Fluid | Compressed air | | | | |
| Working Pressure (MPa) | 0.1~1 | | | | |
| Speed range (mm/s) | 30~500 | | | | |
| Ambient temperature range (℃) | -20~80 | | | | |
| Cushion | Bumper | | | | |
| Port size | M3×0.5 | | M5×0.8 | | |

## How to order:

**MPG 10 × 30 S**

- Specification
  - MPG: Standard Panel Type Cylinder
  - MPGH: Hinge Mounted Cylinder
- Bore
  - Φ6
  - Φ8
  - Φ10
  - Φ12
  - Φ16
- Stroke
- Magnet code
  - Blank: without magnet
  - S: with magnet

## Symbol:

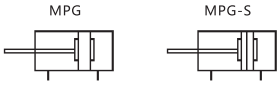

MPG

## Product feature:

1. With compact structure, small size and light weight, it can save the space.
2. Varieties of cylinders can be fixed together to save the installation space.
3. Various standard cylinders and installing accessories are optional for customers with flexible installation.
4. Magnet is optional with position sensor fuction.
5. Inductive switch grooves are on the body to install inductive switches conveniently and flexibly.
6. Various standard bores are optional for customers.

## Inner structure drawing:

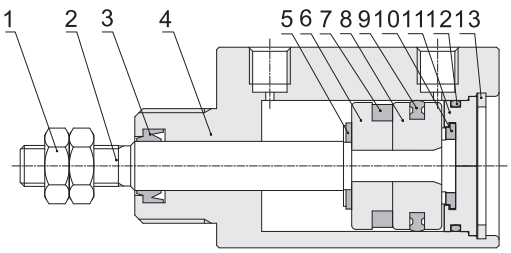


| Number | Name | Number | Name |
|---|---|---|---|
| 1 | Hexagonal nut | 8 | Piston |
| 2 | Piston rod | 9 | C-ring |
| 3 | Dustproof sealing ring | 10 | Fixed plate |
| 4 | Cylinder barrel | 11 | Rear cover |
| 5 | Fixed plate | 12 | O-ring |
| 6 | Magnet seat | 13 | Circlip for hole |
| 7 | Magnet | | |

# Panel Type Cylinder

## Dimension(mm):

### MPG/MPG-S Standard Dimension

■ Φ6~Φ16

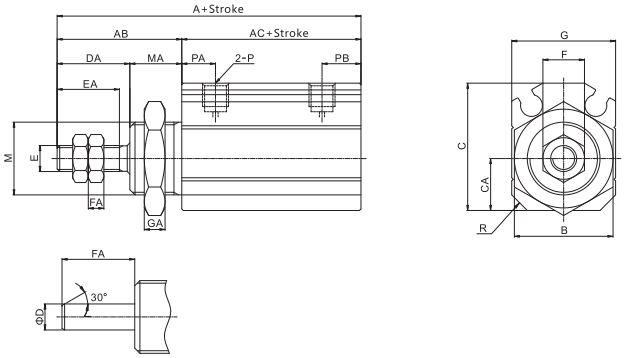


Piston rod without thread

| Bore/Symbol | A(With magnet) | A(Without magnet) | AB | AC(With magnet) | AC(Without magnet) | B | C | CA | D | DA | E | EA |
|---|---|---|---|---|---|---|---|---|---|---|---|---|
| 6 | 38 | 33 | 17 | 21 | 16 | 14 | 16.5 | 6 | 3 | 9 | M3×0.5 | 7 |
| 8 | 43 | 38 | 20 | 23 | 18 | 14.5 | 17.5 | 7 | 4 | 12 | M4×0.7 | 10 |
| 10 | 44.5 | 39.5 | 20 | 24.5 | 19.5 | 15 | 19 | 7 | 4 | 12 | M4×0.7 | 10 |
| 12 | 48.5 | 43.5 | 24 | 24.5 | 19.5 | 17 | 21.5 | 8.5 | 6 | 14 | M5×0.8 | 12 |
| 16 | 48.5 | 43.5 | 24 | 24.5 | 19.5 | 20 | 24.5 | 10 | 6 | 14 | M5×0.8 | 12 |

| Bore/Symbol | F | FA | G | GA | M | MA | P | PA | PB | R |
|---|---|---|---|---|---|---|---|---|---|---|
| 6 | 5.5 | 2.4 | 13 | 3 | M10×1.0 | 8 | M3×0.5 | 5.5 | 6.5 | 2 |
| 8 | 7 | 2.2 | 17 | 3 | M12×1.0 | 8 | M3×0.5 | 6 | 7 | 2 |
| 10 | 7 | 2.2 | 17 | 3 | M12×1.0 | 8 | M3×0.5 | 6 | 7 | 2.5 |
| 12 | 8 | 3 | 19 | 4 | M14×1.0 | 10 | M5×0.8 | 6.5 | 7.5 | 2.5 |
| 16 | 8 | 3 | 19 | 4 | M14×1.0 | 10 | M5×0.8 | 6.5 | 7.5 | 3 |

MPG

### MPGH/MPGH-S Standard Dimension

■ Φ6~Φ16

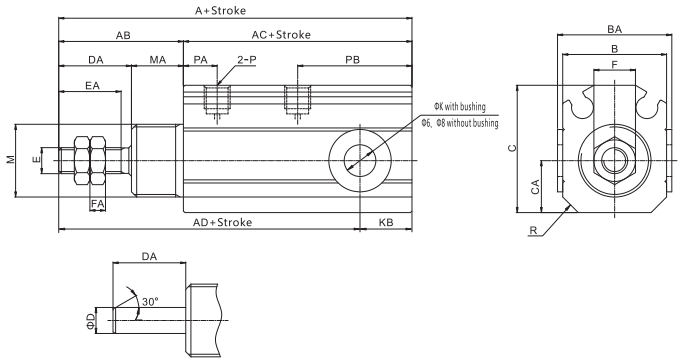


Piston rod without thread

| Bore/Symbol | A(With magnet) | A(Without magnet) | AB | AC(With magnet) | AC(Without magnet) | AD(With magnet) | AD(Without magnet) | B | BA | C | CA | D | DA |
|---|---|---|---|---|---|---|---|---|---|---|---|---|---|
| 6 | 43 | 38 | 17 | 26 | 21 | 39 | 34 | 14 | - | 16.5 | 6 | 3 | 9 |
| 8 | 51 | 46 | 20 | 31 | 26 | 46 | 41 | 14.5 | - | 17.5 | 7 | 4 | 12 |
| 10 | 55.5 | 50.5 | 20 | 35.5 | 30.5 | 49 | 44 | 15 | 17 | 19 | 7 | 4 | 12 |
| 12 | 63 | 58 | 24 | 39 | 34 | 53 | 48 | 17 | 19 | 21.5 | 8.5 | 6 | 14 |
| 16 | 63 | 58 | 24 | 39 | 34 | 53 | 48 | 20 | 22 | 24.5 | 10 | 6 | 14 |

| Bore/Symbol | E | EA | F | FA | K | KB | M | MA | P | PA | PB | R |
|---|---|---|---|---|---|---|---|---|---|---|---|---|
| 6 | M3×0.5 | 7 | 5.5 | 2.4 | $3^{+0.05}_{0}$ | 4 | M10×1.0 | 8 | M3×0.5 | 5.5 | 11.5 | 2 |
| 8 | M4×0.7 | 10 | 7 | 2.2 | $4^{+0.05}_{0}$ | 5 | M12×1.0 | 8 | M3×0.5 | 6 | 15 | 2 |
| 10 | M4×0.7 | 10 | 7 | 2.2 | $5^{+0.065}_{0}$ | 6.5 | M12×1.0 | 8 | M3×0.5 | 6 | 18 | 2.5 |
| 12 | M5×0.8 | 12 | 8 | 3 | $6^{+0.065}_{0}$ | 10 | M14×1.0 | 10 | M5×0.8 | 6.5 | 22 | 2.5 |
| 16 | M5×0.8 | 12 | 8 | 3 | $6^{+0.065}_{0}$ | 10 | M14×1.0 | 10 | M5×0.8 | 6.5 | 22 | 3 |

# Pen Type Cylinder

## Specification:

| Type | 4 | 6 | 10 | 12 | 16 |
|---|---|---|---|---|---|
| Motion | Double acting | | | | |
| Series | PB, PBD, PBJ | | | | |
| Fluid | Compressed air | | | | |
| Working Pressure (MPa) | 0.1~1 | | | | |
| Speed range (mm/s) | 50~800 | | | | |
| Ambient temperature range (℃) | -20~80 | | | | |
| Cushion | - | Bumper | | | |
| Port size | Pipe connection type | M5×0.8 | | | |

## How to order:

**PB 10 × 30 S**

- Specification
  - PB: Pen Type Cylinder
  - PBD: Double axial Pen Type Cylinder
  - PBJ: Double axial adjustable Pen Type Cylinder
- Bore
  - Φ4
  - Φ6
  - Φ10
  - Φ12
  - Φ16
- Stroke
- Magnet code
  - Blank: without magnet
  - S: with magnet

## Symbol:

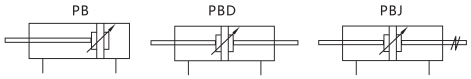

PB

## Product feature:

1. Execute JIS standard.
2. It’s belong to miniature small cylinder with compact structure, small size and light weight.
3. The piston rod has high guiding precision and the guiding bearing has no need of extra lubricant.
4. PB4 and PB6 can only have the front cover installation while PB10、PB12 and PB16 can be installed either in the front or rear covers.
5. Stainless steel piston rod and cylinder body help cylinder adapt to general corrosive working environment.
6. Various standard cylinders and installing accessories are optional for customers.
7. Small bore and rapid response can help it adapt to high frequency work environment.

## Inner structure drawing:

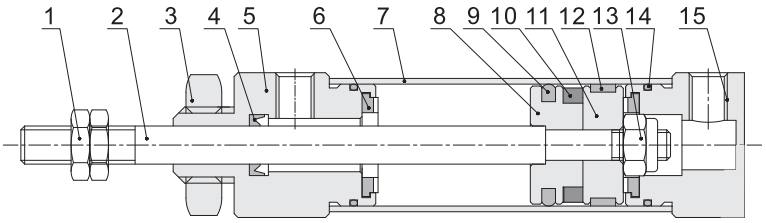


| Number | Name | Number | Name |
|---|---|---|---|
| 1 | Hexagonal nut | 9 | Sealing ring |
| 2 | Piston rod | 10 | Magnet |
| 3 | Hexagonal nut | 11 | Wearing ring beat |
| 4 | Sealing ring | 12 | Wearing ring |
| 5 | Front cover | 13 | Hexagonal nut |
| 6 | Fenders | 14 | O-ring |
| 7 | Cylinder barrel | 15 | Rear cover |
| 8 | Piston | | |

# Pen Type Cylinder

## Dimension(mm):

### PB Standard Dimension

■ Φ4(Whit magnet)(R type)

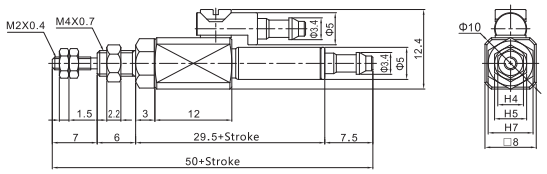


■ Φ6(R type)

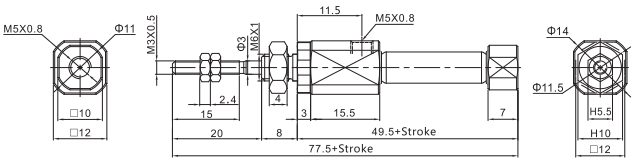


Note: The rear cover of Φ4,Φ6 bore only have axial inlet type (R type)

■ Φ10~Φ16

U type(Radial intake type)

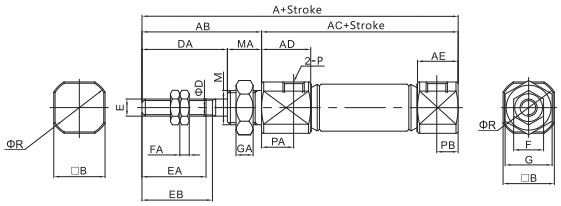


CB type(Double-ear type)

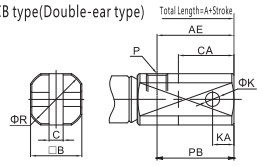


R type(have axial inlet type)

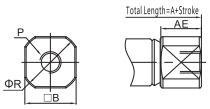


| Bore/Symbol | A | | | AB | AC | AD | AE | | B | C | CA | D | DA | E | EA | EB |
|---|---|---|---|---|---|---|---|---|---|---|---|---|---|---|---|---|
| Rear cover | U | CB | R | | | | U/R | CB | | | | | | | | |
| 10 | 74 | 87 | 74 | 28 | 46 | 11.5 | 9.5 | 22.5 | 12 | 3.3 | 13 | 4 | 20 | M4×0.7 | 15 | 16.5 |
| 12 | 74 | 92 | 74 | 28 | 46 | 11.5 | 9.5 | 27.5 | 15 | 6.6 | 18 | 5 | 20 | M5×0.8 | 15 | 16.5 |
| 16 | 76 | 94 | 76 | 28 | 48 | 12 | 9.5 | 27.5 | 18 | 6.6 | 18 | 5 | 20 | M5×0.8 | 15 | 16.5 |

| Bore/Symbol | F | FA | G | GA | K | KA | M | MA | P | PA | PB | | R |
|---|---|---|---|---|---|---|---|---|---|---|---|---|---|
| Rear cover | | | | | | | | | | | U | CB | |
| 10 | 7 | 2.2 | 11 | 4 | 3.3 | 5 | M8×1 | 8 | M5×0.8 | 7.5 | 5 | 18 | 14 |
| 12 | 8 | 4 | 14 | 4 | 5 | 8 | M10×1 | 8 | M5×0.8 | 7.5 | 5 | 23 | 17 |
| 16 | 8 | 4 | 14 | 4 | 5 | 8 | M10×1 | 8 | M5×0.8 | 7.5 | 5 | 23 | 20 |

Notes: With or without magnet, the dimensions are the same.

### PBD Standard Dimension

■ Φ6

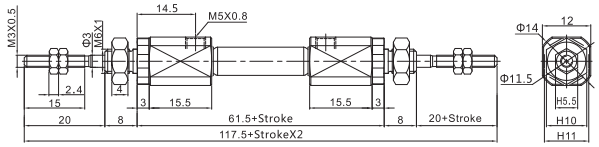


■ Φ10~Φ16

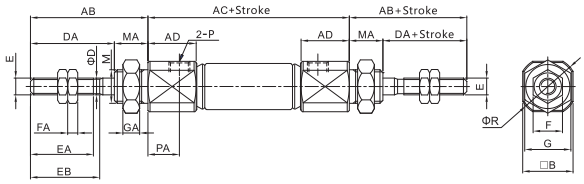


### PBJ Standard Dimension

■ Φ10~Φ16

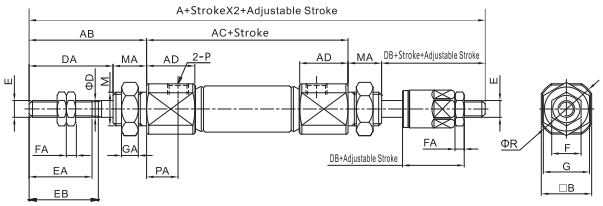


| Bore/Symbol | A | | AB | AC | AD | B | D | DA | DB | E |
|---|---|---|---|---|---|---|---|---|---|---|
| Rear cover | PBD | PBJ | | | | | | | | |
| 10 | 104 | 99 | 28 | 48 | 11.5 | 12 | 4 | 20 | 15 | M4×0.7 |
| 12 | 104 | 101 | 28 | 48 | 11.5 | 15 | 5 | 20 | 17 | M5×0.8 |
| 16 | 107 | 104 | 28 | 51 | 12 | 18 | 5 | 20 | 17 | M5×0.8 |

| Rear cover | EA | EB | F | FA | G | GA | M | MA | P | PA |
|---|---|---|---|---|---|---|---|---|---|---|
| 10 | 15 | 16.5 | 7 | 2.2 | 11 | 4 | M8×1 | 8 | M5×0.8 | 7.5 |
| 12 | 15 | 16.5 | 8 | 4 | 14 | 4 | M10×1 | 8 | M5×0.8 | 7.5 |
| 16 | 15 | 16.5 | 8 | 4 | 14 | 4 | M10×1 | 8 | M5×0.8 | 7.5 |

Notes: With or without magnet, the dimensions are the same.

# Pen Type Cylinder

## Specification:

| Type | 6 | 8 | 10 | 12 | 16 |
|---|---|---|---|---|---|
| Motion | Double acting | | | | |
| Series | PBR | | | | |
| Fluid | Compressed air | | | | |
| Pressure range (Kgf/cm²) | 0.1~0.7 | | | | |
| Speed range (mm/s) | 50~500 | | | | |
| Ambient temperature range (℃) | -20~80 | | | | |
| Cushion type | Bumper | | | | |
| Port size | M5×0.8 | | | | |

## How to order:

**PBR 16×30 S**

- Specification: PBR: Pen Type Cylinder
- Bore: Φ6, Φ8, Φ10, Φ12, Φ16
- Stroke
- Magnet code: Blank: without magnet; S: with magnet

## Symbol:

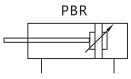

PRB

## Product feature:

1. Execute JIS standard.
2. It's belong to miniature small cylinder with compact structure, small size and light weight.
3. The piston rod has high guiding precision and the guiding bearing has no need of extra lubricant.
4. Stainless steel piston rod and cylinder body help cylinder adapt to general corrosive working environment.
5. Small bore and rapid response can help it adapt to high frequency work environment.

## Inner structure drawing:

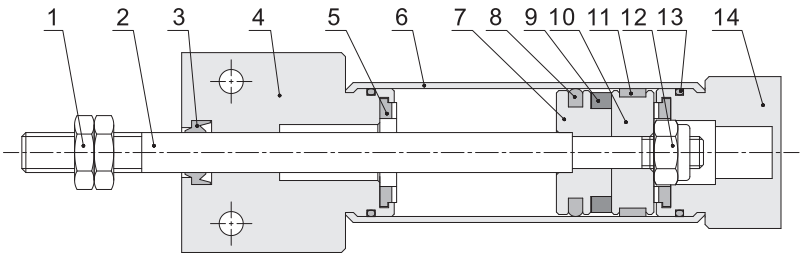


| Number | Name | Number | Name |
|---|---|---|---|
| 1 | Hexagonal nut | 8 | Sealing ring |
| 2 | Piston rod | 9 | Magnet |
| 3 | Sealing ring | 10 | Wearing ring beat |
| 4 | Front cover | 11 | Wearing ring |
| 5 | Fenders | 12 | Hexagonal nut |
| 6 | Cylinder barrel | 13 | O-ring |
| 7 | Piston | 14 | Rear cover |

# Pen Type Cylinder

## Dimension(mm):

### PBR Standard Dimension

■ Φ6~Φ16

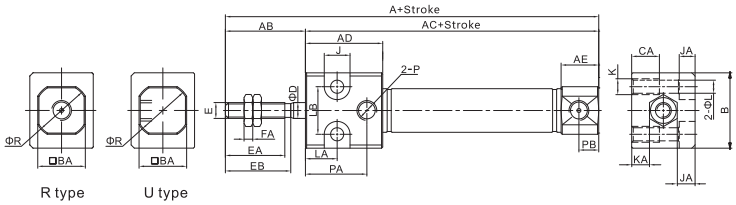


| Bore/Symbol | A | AB | AC | AD | AE | B | BA | C | CA | D | E | EA | EB | F |
|---|---|---|---|---|---|---|---|---|---|---|---|---|---|---|
| 6 | 70 | 20 | 50 | 19 | 7 | 17.2 | 10 | 14 | 7 | 3 | M3×0.5 | 15 | 16 | 5.5 |
| 8 | 74 | 20 | 54 | 19.5 | 9.5 | 19.2 | 12 | 16 | 8 | 4 | M4×0.7 | 15 | 16.5 | 7 |
| 10 | 74 | 20 | 54 | 19.5 | 9.5 | 19.2 | 12 | 16 | 8 | 4 | M4×0.7 | 15 | 16.5 | 7 |
| 12 | 74 | 20 | 54 | 19.5 | 9.5 | 24.2 | 15 | 20 | 10 | 5 | M5×0.8 | 15 | 16.5 | 8 |
| 16 | 76 | 20 | 56 | 20 | 9.5 | 24.2 | 18 | 20 | 10 | 6 | M5×0.8 | 15 | 16.5 | 8 |

| Bore/Symbol | FA | J | JA | K | KA | L | LA | LB | P | PA | PB | R |
|---|---|---|---|---|---|---|---|---|---|---|---|---|
| 6 | 2.4 | 6.5 | 4 | M4×0.7 | 7 | 3.3 | 8 | 10 | M5×0.8 | 14 | - | 11 |
| 8 | 2.2 | 6.5 | 4 | M4×0.7 | 7 | 3.3 | 8 | 12 | M5×0.8 | 15 | 5 | 14 |
| 10 | 2.2 | 6.5 | 4 | M4×0.7 | 7 | 3.3 | 8 | 12 | M5×0.8 | 15.5 | 5 | 14 |
| 12 | 4 | 8 | 5 | M5×0.8 | 8 | 4.3 | 8 | 16 | M5×0.8 | 15.5 | 5 | 17 |
| 16 | 4 | 8 | 5 | M5×0.8 | 8 | 4.3 | 8 | 16 | M5×0.8 | 15.5 | 5 | 20 |

Note: 1、With or without magnet, the dimensions are the same
2、The rear cover of Φ6 bore only have axial inlet type (R type)

# Slide Table Cylinder

## Specification:

| Type | 10 | 16 | 20 | 25 | 32 |
|---|---|---|---|---|---|
| Motion | Double acting | | | | |
| Fluid | Compressed air | | | | |
| Working Pressure (MPa) | 0.1~1 | | | | |
| Warrant endure-pressure (MPa) | 1.5 | | | | |
| Ambient temperature range (℃) | -20~70 | | | | |
| Speed range (mm/s) | 30~500 | | | | |
| Cushion type | Oil buffer | | | | |
| Port size | M5×0.8 | | | 1/8" | |

## How to order:

**STW B 25×50 S**

- Specification: STW: Slide Table Cylinder
- Mounting type: A: Fixing plate mounted; B: Body mounted
- Bore: Φ10, Φ16, Φ20, Φ25, Φ32
- Stroke
- Magnet code: Blank: without magnet; S: with magnet

## Symbol:

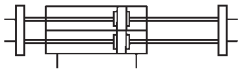

## Product feature:

1. The sliding block and the body can both install to make it conveniently for use.
2. Three units of air inlets and outlets are optional for customers to help tube conveniently.
3. Double piston rod structure makes cylinder have better bending and torsion resistance and can bear bigger exercise and side load.
4. It comes with oil buffer and other buffer devices to retard the impact velocity effectively and prolong the service life of the cylinder.

STW

## Inner structure drawing:

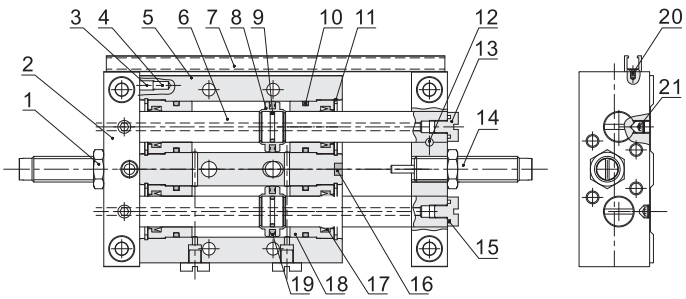


| Number | Name | Number | Name |
|---|---|---|---|
| 1 | Hexagonal nut | 12 | Locating pin |
| 2 | Cylinder fixed plate | 13 | Plug screw |
| 3 | Locating gasket | 14 | Hydraulic buffer |
| 4 | Magnet | 15 | O-ring |
| 5 | Body | 16 | Anti-collision gasket |
| 6 | Piston rod | 17 | Axis core O-ring |
| 7 | Inductive switch mounting bar | 18 | Front cover |
| 8 | Piston | 19 | Piston O-ring |
| 9 | O-ring | 20 | Countersunk screw |
| 10 | O-ring | 21 | Set screw |
| 11 | C-shaped retaining ring | | |

# Slide Table Cylinder

## Dimension(mm):

Type: STW10 Stroke=25mm

### A type (fixed plate fixed type)

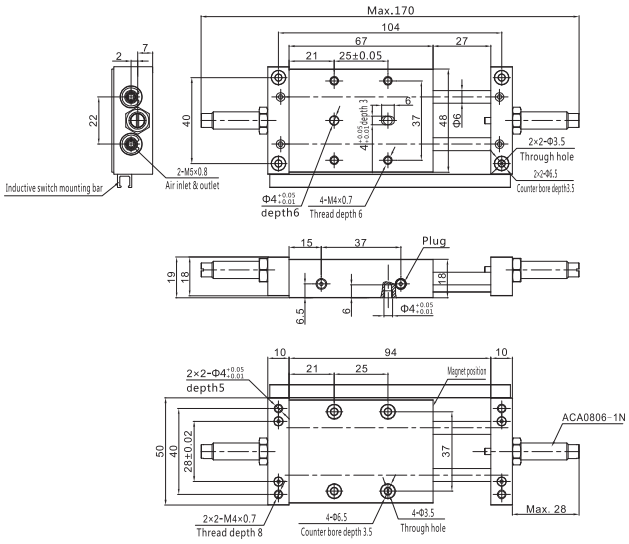


### B type (body fixed type)

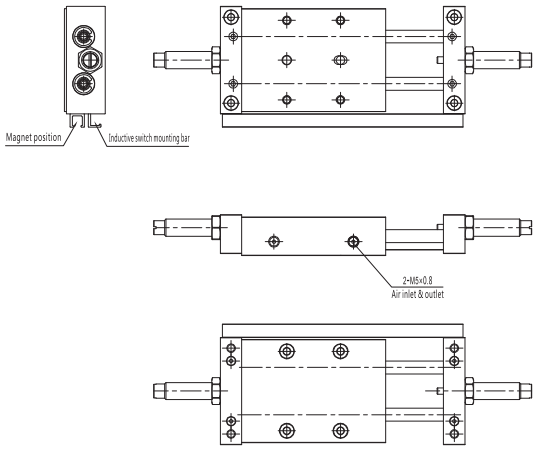


Type: STW10 Stroke=50 75 100mm

### A type (fixed plate fixed type)

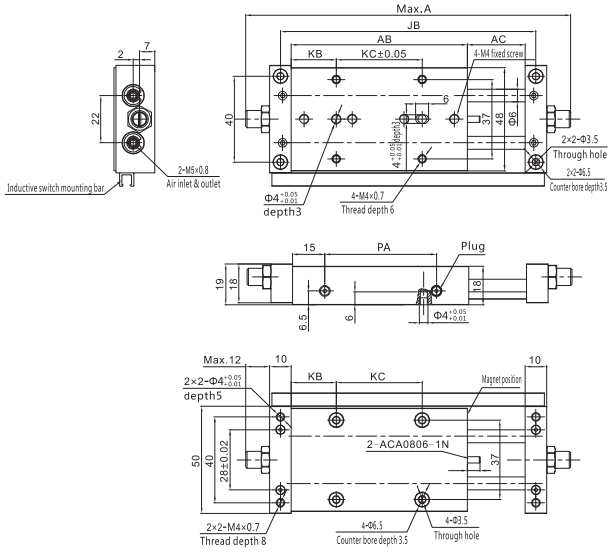


### B type (body fixed type)

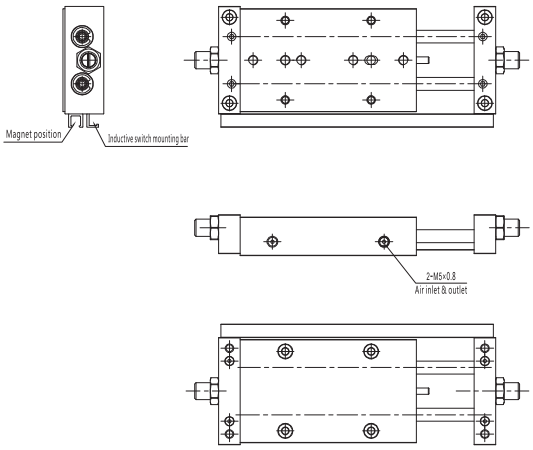


| Stroke/Symbol | A | AB | AC | JB | KB | KC | PA |
|---|---|---|---|---|---|---|---|
| 50 | 188 | 92 | 52 | 154 | 26 | 40 | 62 |
| 75 | 238 | 117 | 77 | 204 | 26 | 65 | 87 |
| 100 | 288 | 142 | 102 | 254 | 26 | 90 | 112 |

STW

# Slide Table Cylinder

## Dimension(mm):

Type: STW16 Stroke=25mm

### A type (fixed plate fixed type)

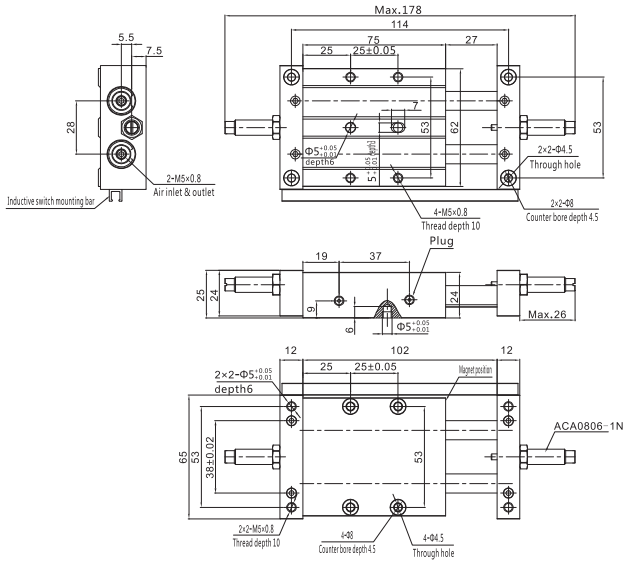


### B type (body fixed type)

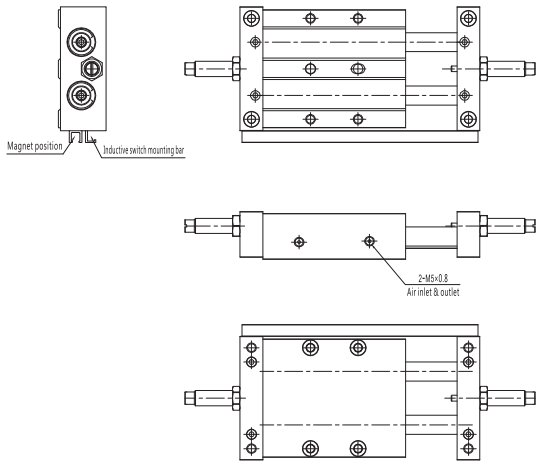


Type: STW16 Stroke=50 75 100 125 150 175 200mm

### A type (fixed plate fixed type)

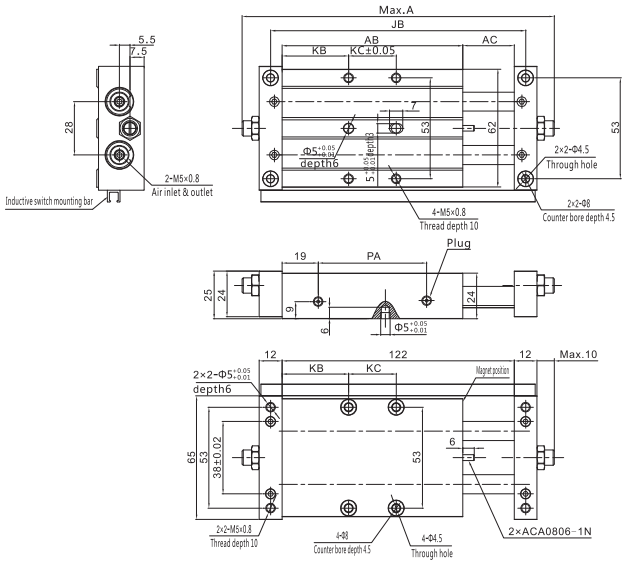


### B type (body fixed type)

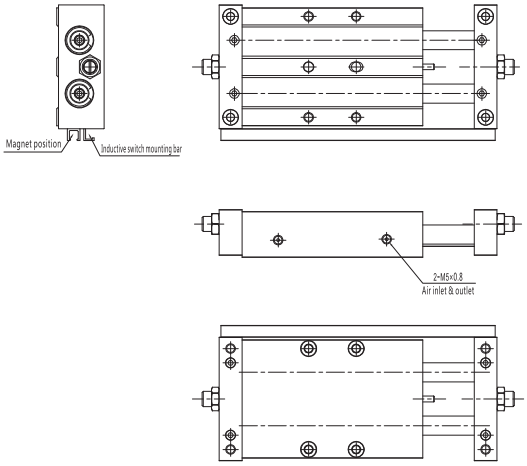


| Stroke/Symbol | A | AB | AC | JB | KB | KC | PA |
|---|---|---|---|---|---|---|---|
| 50 | 196 | 100 | 52 | 164 | 35 | 30 | 62 |
| 75 | 246 | 125 | 77 | 214 | 32.5 | 60 | 87 |
| 100 | 296 | 150 | 102 | 264 | 37.5 | 75 | 112 |
| 125 | 346 | 175 | 127 | 314 | 42.5 | 90 | 137 |
| 150 | 396 | 200 | 152 | 364 | 55 | 90 | 162 |
| 175 | 446 | 225 | 177 | 414 | 67.5 | 90 | 187 |
| 200 | 496 | 250 | 202 | 464 | 80 | 90 | 212 |

# Slide Table Cylinder

## Dimension(mm):

Type: STW20 Stroke=25mm

### A type (fixed plate fixed type)

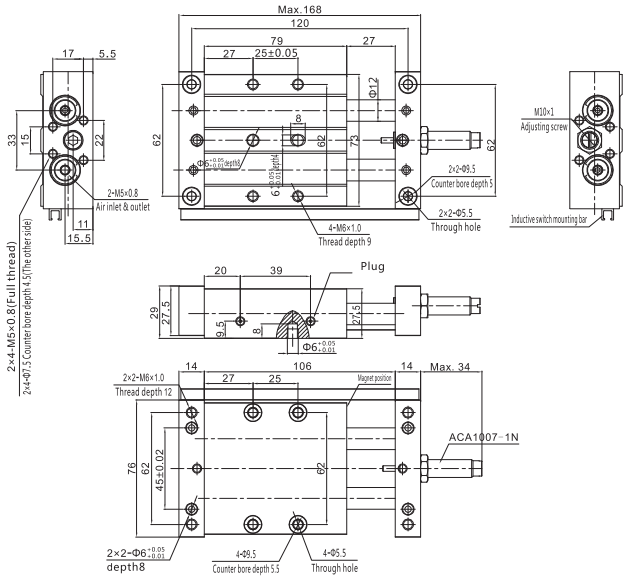


### B type (body fixed type)

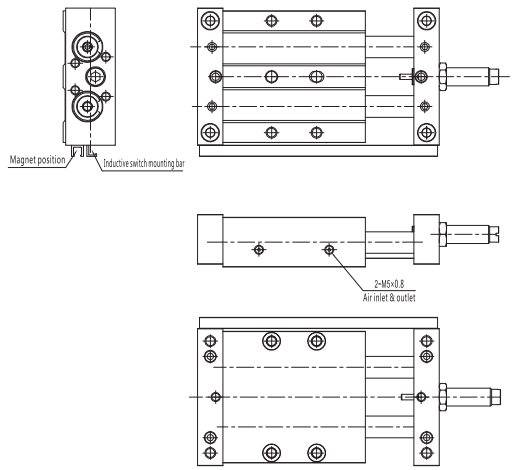


Type: STW20 Stroke=50 75 100 125 150 175 200mm

### A type (fixed plate fixed type)

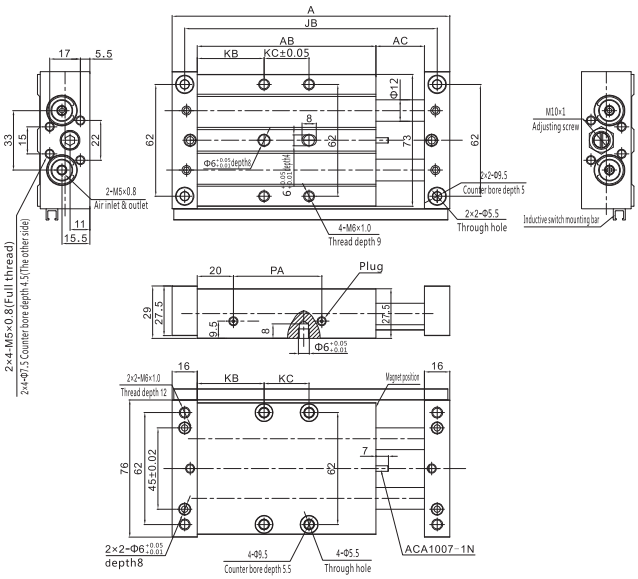


### B type (body fixed type)

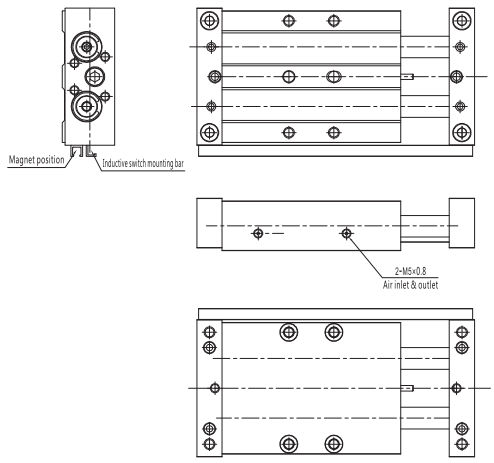


| Stroke/Symbol | A | AB | AC | JB | KB | KC | PA |
|---|---|---|---|---|---|---|---|
| 50 | 184 | 104 | 52 | 170 | 34.5 | 35 | 64 |
| 75 | 234 | 129 | 77 | 220 | 34.5 | 60 | 89 |
| 100 | 284 | 154 | 102 | 270 | 39.5 | 75 | 114 |
| 125 | 334 | 179 | 127 | 320 | 44.5 | 90 | 139 |
| 150 | 384 | 204 | 152 | 370 | 57 | 90 | 164 |
| 175 | 434 | 229 | 177 | 420 | 69.5 | 90 | 189 |
| 200 | 484 | 254 | 202 | 470 | 82 | 90 | 214 |

# Slide Table Cylinder

## Dimension(mm):

Type: STW25 Stroke=25mm

### A type (fixed plate fixed type)

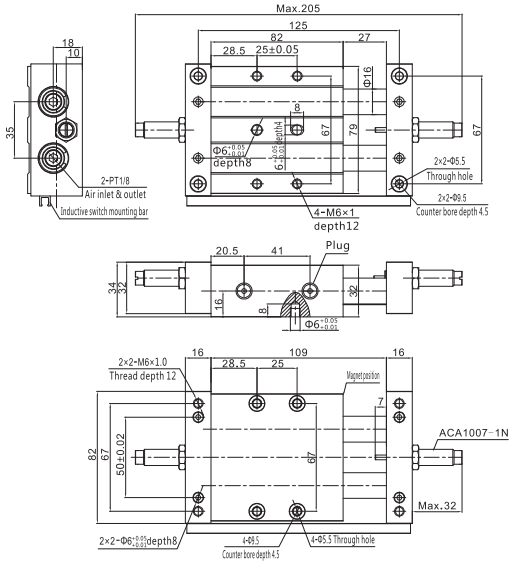


### B type (body fixed type)

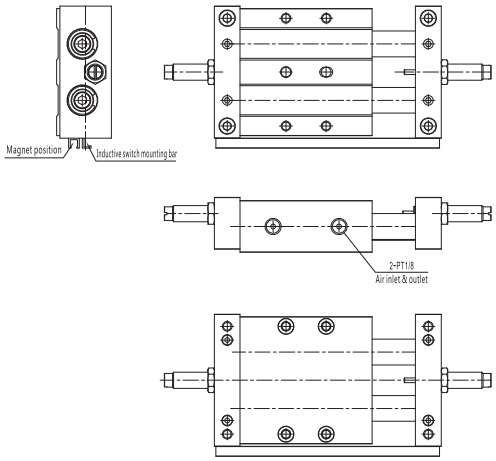


Type: STW25 Stroke=50 75 100 125 150 175 200mm

### A type (fixed plate fixed type)

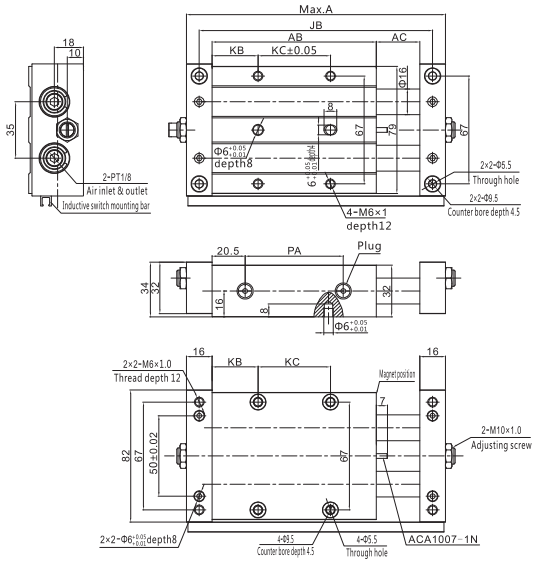


### B type (body fixed type)

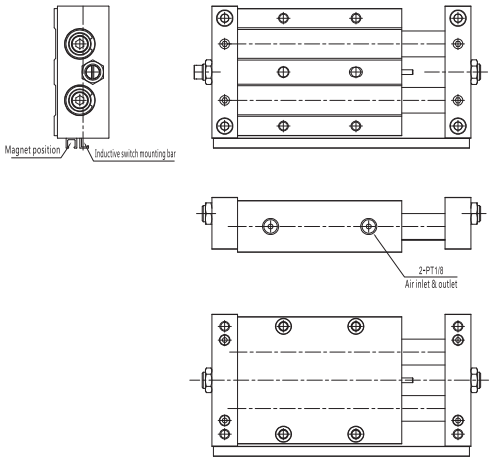


| Stroke/Symbol | A | AB | AC | JB | KB | KC | PA |
|---|---|---|---|---|---|---|---|
| 50 | 209 | 107 | 52 | 175 | 31 | 45 | 66 |
| 75 | 259 | 132 | 77 | 225 | 33.5 | 65 | 91 |
| 100 | 309 | 157 | 102 | 275 | 33.5 | 90 | 116 |
| 125 | 359 | 182 | 127 | 325 | 46 | 90 | 141 |
| 150 | 409 | 207 | 152 | 375 | 58.5 | 90 | 166 |
| 175 | 459 | 232 | 177 | 425 | 71 | 90 | 191 |
| 200 | 509 | 257 | 202 | 475 | 83.5 | 90 | 216 |

# Slide Table Cylinder

## Dimension(mm):

Type: STW32 Stroke=25 50mm

### A type (fixed plate fixed type)

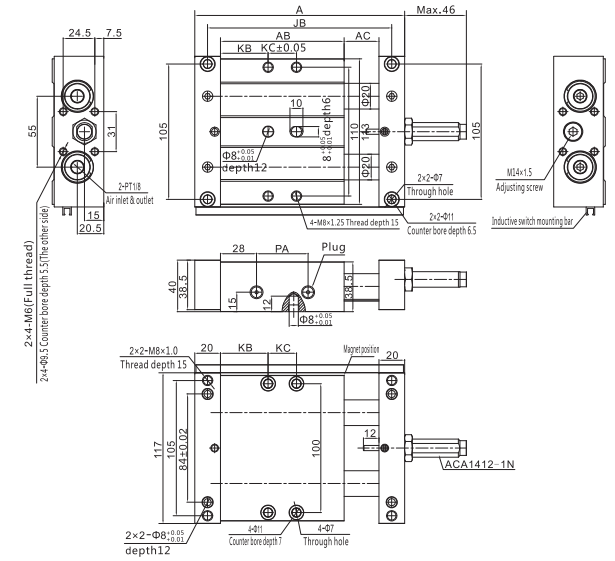


### B type (body fixed type)

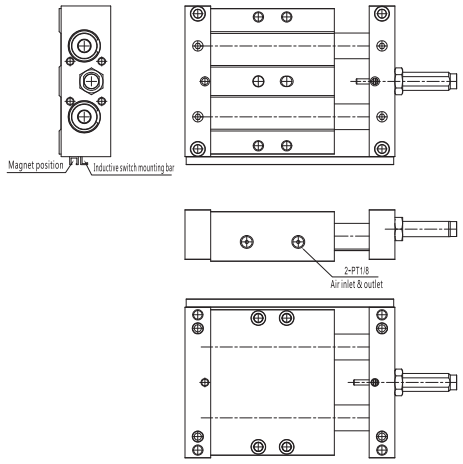


| Stroke/Symbol | A | AB | AC | JB | KB | KC | PA |
|---|---|---|---|---|---|---|---|
| 25 | 163 | 96 | 27 | 143 | 37 | 22 | 40 |
| 50 | 213 | 121 | 52 | 193 | 38 | 45 | 65 |

Type: STW32 Stroke=75 100 125 150 175 200mm

### A type (fixed plate fixed type)

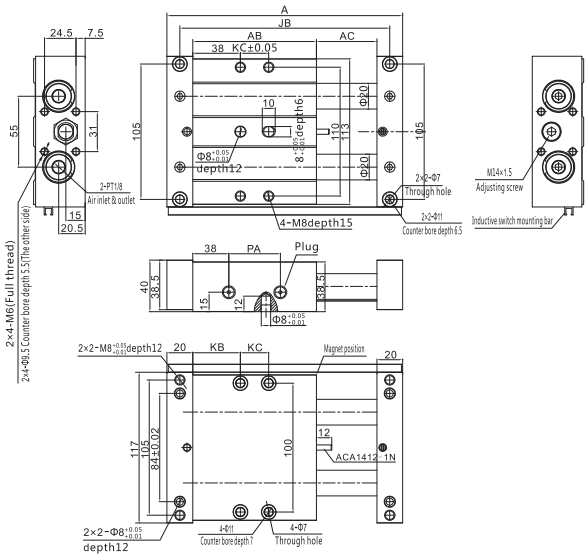


### B type (body fixed type)

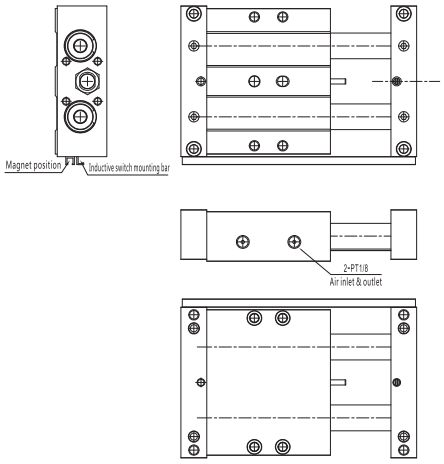


| Stroke/Symbol | A | AB | AC | JB | KB | KC | PA |
|---|---|---|---|---|---|---|---|
| 75 | 263 | 146 | 77 | 243 | 70 | 90 | |
| 100 | 313 | 171 | 102 | 293 | 95 | 115 | |
| 125 | 363 | 196 | 127 | 343 | 120 | 140. | |
| 150 | 413 | 221 | 152 | 393 | 145 | 165 | |
| 175 | 463 | 246 | 177 | 443 | 170 | 190 | |
| 200 | 513 | 271 | 202 | 493 | 195 | 215 | |

# Side Rail Type Precise Sliding Table Cylinder

## Specification:

| Type | 6 | 10 | 16 | 20 |
|---|---|---|---|---|
| Guide rail width(mm) | 5 | 7 | 9 | 12 |
| Motion | Double acting | | | |
| Fluid | Compressed air | | | |
| Working Pressure (MPa) | 6: 0.15~0.7; Other: 0.1~0.7 | | | |
| Warrant endure-pressure (MPa) | 1 | | | |
| Ambient temperature range (℃) | -20~70 | | | |
| Speed range(mm/s) | 30~500 | | | |
| Cushion type | Fixed bumper on both ends | | | |
| Port size | M5×0.8 | | | |

## How to order:

**MXH 20×30 S**

- Specification: MXH: Side Rail Type Precise Sliding Table Cylinder
- Bore: Φ6, Φ10, Φ16, Φ20
- Stroke
- Magnet code: Blank: without magnet; S: with magnet

## Symbol:

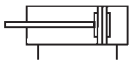

## Product feature:

MXH

1. Miniature recirculating ball linear guideway and cylinder integration design.
2. It possesses great straightness and no–rotation precision to be more suitably used in precision assembly situation.
3. It can install fixed cylinders from four directions.
4. It can tube from three directions.

## Inner structure drawing:

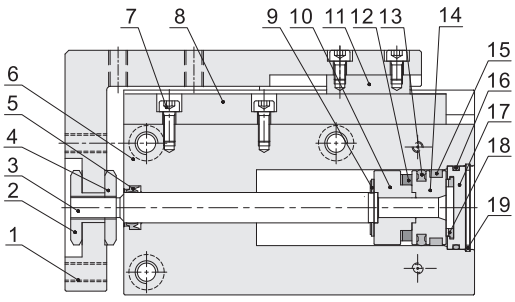


| Number | Name | Number | Name |
|---|---|---|---|
| 1 | Slide | 11 | Slide block |
| 2 | Hexagonal nut(with bos) | 12 | Magnet |
| 3 | Piston rod | 13 | sealing ring |
| 4 | Hexagonal nut | 14 | Piston |
| 5 | Dustproof sealing ring | 15 | Wear-resistant belt |
| 6 | Cylinder barrel | 16 | O-ring |
| 7 | Hexagon socket cap screws | 17 | Rear cover |
| 8 | Guide | 18 | Fenders |
| 9 | Fenders | 19 | Retaining ring for hole |
| 10 | Magnet seat | | |

# Side Rail Type Precise Sliding Table Cylinder

## Dimension(mm):

### MXH6

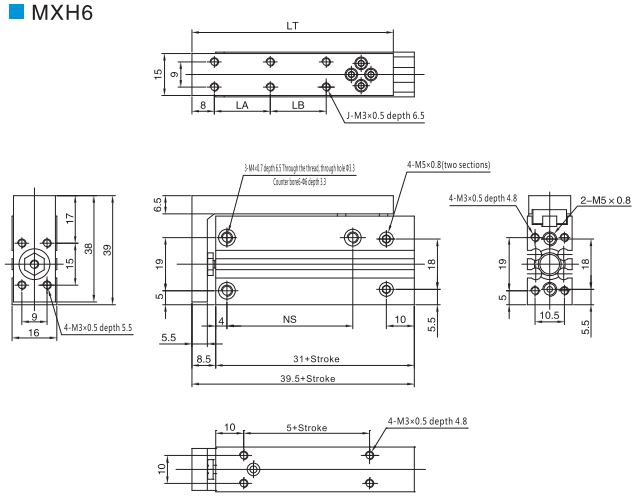


| Stroke/Symbol | J | LA | LB | LT | NS |
|---|---|---|---|---|---|
| 5 | 4 | 10 | — | 42 | 14 |
| 10 | 4 | 10 | — | 42 | 14 |
| 15 | 4 | 20 | — | 52 | 24 |
| 20 | 4 | 20 | — | 52 | 24 |
| 25 | 4 | 30 | — | 62 | 30 |
| 30 | 4 | 30 | — | 62 | 30 |
| 40 | 6 | 20 | 20 | 72 | 45 |
| 50 | 6 | 25 | 25 | 82 | 55 |
| 60 | 6 | 30 | 30 | 92 | 60 |

### MXH10

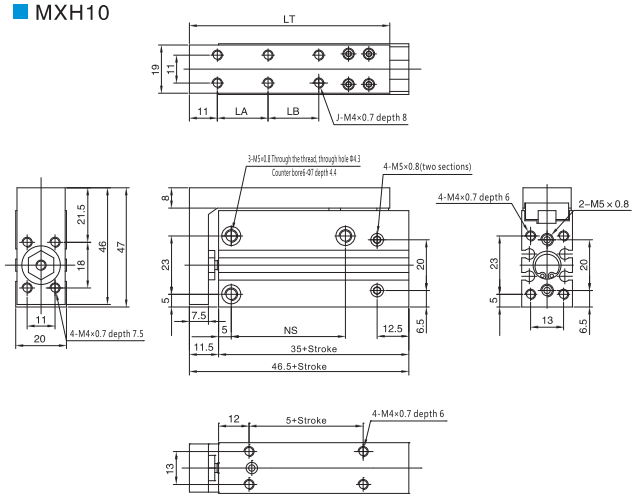


| Stroke/Symbol | J | LA | LB | LT | NS |
|---|---|---|---|---|---|
| 5 | 4 | 10 | — | 49 | 14 |
| 10 | 4 | 10 | — | 49 | 14 |
| 15 | 4 | 20 | — | 59 | 24 |
| 20 | 4 | 20 | — | 59 | 24 |
| 25 | 4 | 30 | — | 69 | 30 |
| 30 | 4 | 30 | — | 69 | 30 |
| 40 | 6 | 20 | 20 | 79 | 45 |
| 50 | 6 | 25 | 25 | 89 | 55 |
| 60 | 6 | 30 | 30 | 99 | 60 |

### MXH16

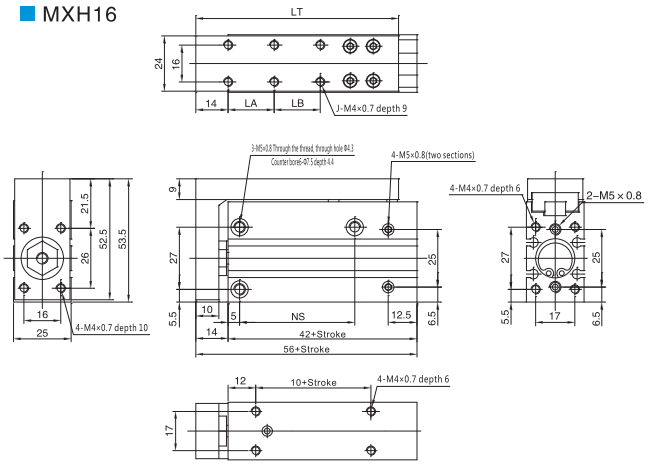


| Stroke/Symbol | J | LA | LB | LT | NS |
|---|---|---|---|---|---|
| 5 | 4 | 10 | — | 58 | 20 |
| 10 | 4 | 10 | — | 58 | 20 |
| 15 | 4 | 20 | — | 68 | 30 |
| 20 | 4 | 20 | — | 68 | 30 |
| 25 | 4 | 30 | — | 78 | 40 |
| 30 | 4 | 30 | — | 78 | 40 |
| 40 | 6 | 20 | 20 | 88 | 50 |
| 50 | 6 | 25 | 25 | 98 | 60 |
| 60 | 6 | 30 | 30 | 108 | 60 |

### MXH20

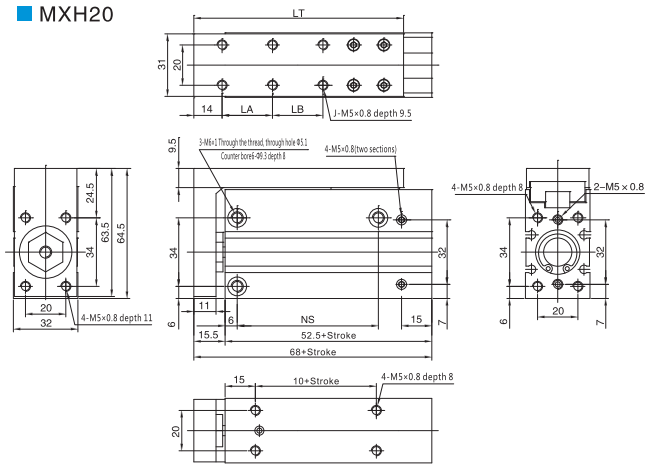


| Stroke/Symbol | J | LA | LB | LT | NS |
|---|---|---|---|---|---|
| 5 | 4 | 10 | — | 64 | 20 |
| 10 | 4 | 10 | — | 64 | 20 |
| 15 | 4 | 20 | — | 74 | 25 |
| 20 | 4 | 20 | — | 74 | 25 |
| 25 | 4 | 30 | — | 84 | 40 |
| 30 | 4 | 30 | — | 84 | 40 |
| 40 | 6 | 20 | 20 | 94 | 50 |
| 50 | 6 | 25 | 25 | 104 | 70 |
| 60 | 6 | 30 | 30 | 114 | 70 |

# Biaxial Type Precise Sliding Table Cylinder (Recirculating Roller)

## Specification:

| Type | 6 | 8 | 12 | 16 | 20 | 25 |
|---|---|---|---|---|---|---|
| Guide rail width(mm) | 10(Single track) | | 7(Double track) | 9(Double track) | | 12(Double track) |
| Motion | Double acting | | | | | |
| Fluid | Compressed Air | | | | | |
| Working Pressure (MPa) | 0.15~0.7 | | | | | |
| Warrant endure-pressure (MPa) | 1.5 | | | | | |
| Ambient temperature range (℃) | -20~70 | | | | | |
| Speed range (mm/s) | 30~500 | | | | | |
| Cushion type | Fixed bumper on both ends/Hydraulic buffer | | | | | |
| Port size | M5×0.8 | | | | PT1/8" | |

## How to order:

**HLQ 20×30 S AS**

- Specification: HLQ: Biaxial Type Precise Sliding Table Cylinder (Recirculating Roller)
- Bore: Φ6, Φ8, Φ12, Φ16, Φ20, Φ25
- Stroke
- Magnet code: S: with magnet
- External block type:
  - Blank: None External block (basic type)
  - A: Stroke adjusting screw on both ends
  - B: Hydraulic buffer on both ends
  - AS: Stroke adjusting screw on forward end
  - BS: Hydraulic buffer on forward end
  - AF: Stroke adjusting screw on backward end
  - BF: Hydraulic buffer on backward end

## Symbol:

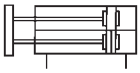

## Product Feature:

MXQ

1. Double precision linear guideway can achieve the performance of high precision and high rigidity together with rustproof and dustproof performance.
2. The installation holes are reserved above the sliding block to fix the body from above conveniently.
3. The slide block comes with installed dowel holes.
4. Floating connector design is adopted to prevent piston rod from bearing extra load torque.
5. With double piston rods, it can get double output.
6. The body comes with installed dowel holes.
7. The bottom and end face of the body attaches installed screw holes.

## Inner structure drawing:

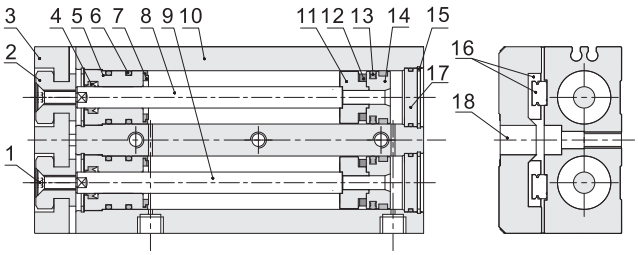


| Number | Name | Number | Name |
|---|---|---|---|
| 1 | Hexagon socket countersunk head screw | 10 | Body |
| 2 | Floating joint | 11 | Magnet seat |
| 3 | Fixed plate | 12 | Magnet |
| 4 | Axis O-ring | 13 | Piston O-ring |
| 5 | Front cover | 14 | Piston |
| 6 | O-ring | 15 | Retaining ring for hole |
| 7 | Fenders | 16 | Linear guide combination |
| 8 | Piston rod A | 17 | Rear cover |
| 9 | Piston rod B | 18 | Slide |

# Biaxial Type Precise Sliding Table Cylinder (Recirculating Roller)

## Dimension(mm):

### MXQ6

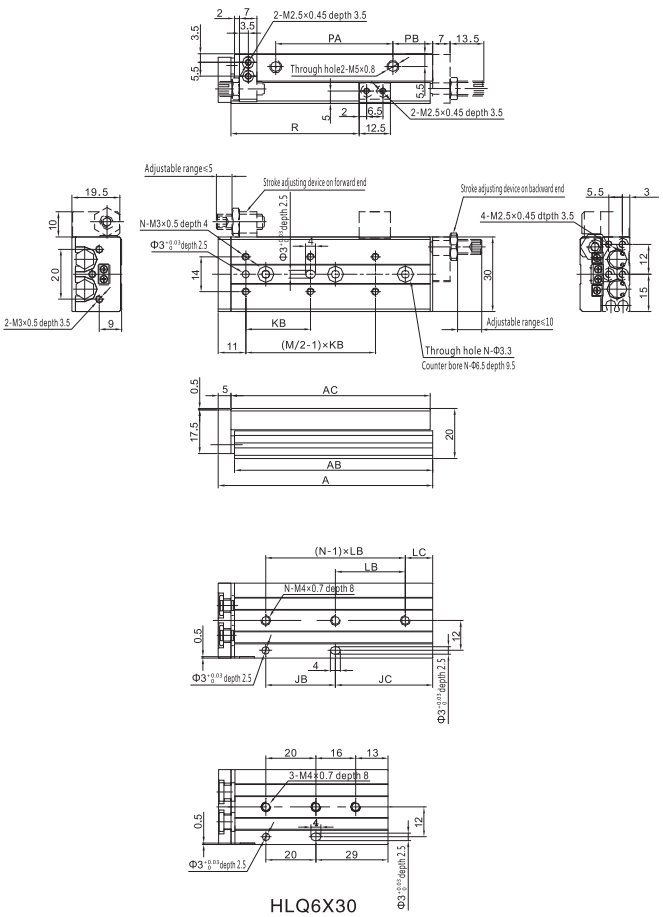


HLQ6X30

| Stroke/Symbol | A | AB | AC | JB | JC | KB | LB | LC | M | N | PA | PB | R |
|---|---|---|---|---|---|---|---|---|---|---|---|---|---|
| 10 | 48 | 41.5 | 42 | 16 | 13 | 22 | 23 | 6 | 4 | 2 | 16 | 9 | 21.5 |
| 20 | 58 | 51.5 | 52 | 26 | 13 | 25 | 26 | 13 | 4 | 2 | 26 | 9 | 31.5 |
| 30 | 68 | 61.5 | 62 | 20. | 29 | 21 | See figure | See figure | 6 | 3 | 36 | 9 | 41.5 |
| 40 | 86 | 79.5 | 80 | 28 | 39 | 26 | 28 | 11 | 6 | 3 | 47 | 16 | 51.5 |
| 50 | 96 | 89.5 | 90 | 28 | 49 | 27 | 28 | 21 | 6 | 3 | 64 | 9 | 61.5 |

### MXQ8

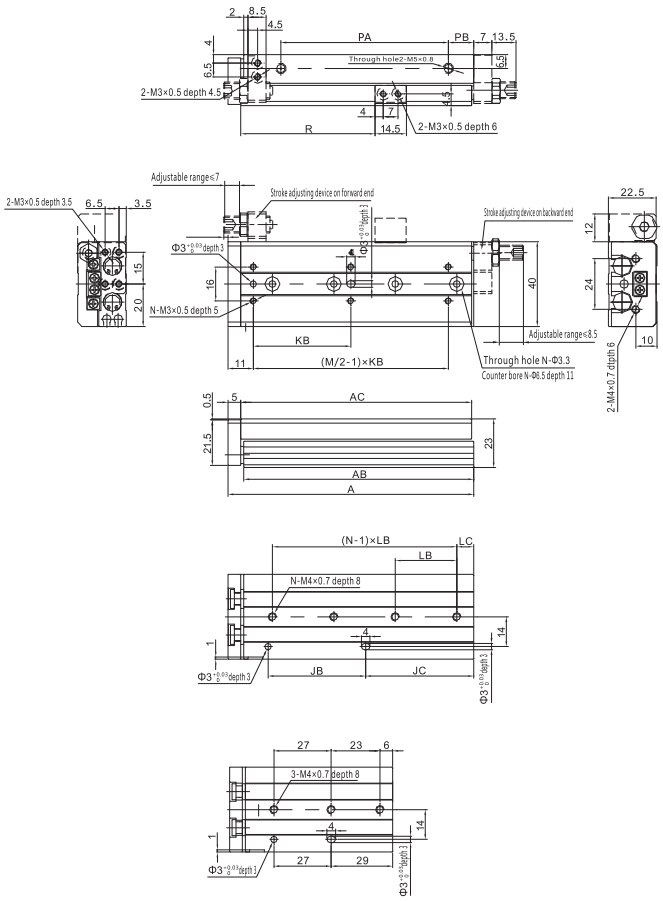


HLQ8X30

| Stroke/Symbol | A | AB | AC | JB | JC | KB | LB | LC | M | N | PA | PB | R |
|---|---|---|---|---|---|---|---|---|---|---|---|---|---|
| 10 | 53 | 45.5 | 46 | 19 | 13 | 25 | 25 | 7 | 4 | 2 | 18 | 10 | 23.5 |
| 20 | 63 | 55.5 | 56 | 28 | 14 | 25 | 28 | 14 | 4 | 2 | 28 | 10 | 33.5 |
| 30 | 77 | 69.5 | 70 | 27 | 29 | 26 | See figure | See figure | 6 | 3 | 42 | 10 | 43.5 |
| 40 | 91 | 83.5 | 84 | 31 | 39 | 32 | 31 | 8 | 6 | 3 | 54 | 12 | 53.5 |
| 50 | 116 | 108.5 | 109 | 58 | 37 | 46 | 29 | 8 | 6 | 4 | 79 | 12 | 63.5 |
| 75 | 144 | 136.5 | 137 | 60 | 61 | 50 | 30 | 31 | 6 | 4 | 107 | 10 | 88.5 |

### HLQ8(with hydraulic buffer)

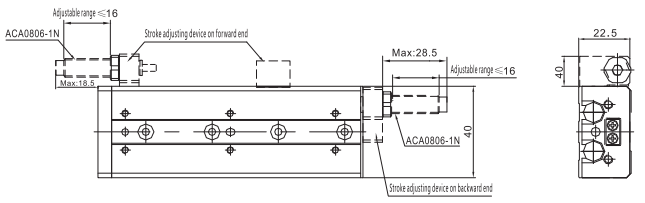

MXQ

# Biaxial Type Precise Sliding Table Cylinder (Recirculating Roller)

## Dimension(mm):

### MXQ12

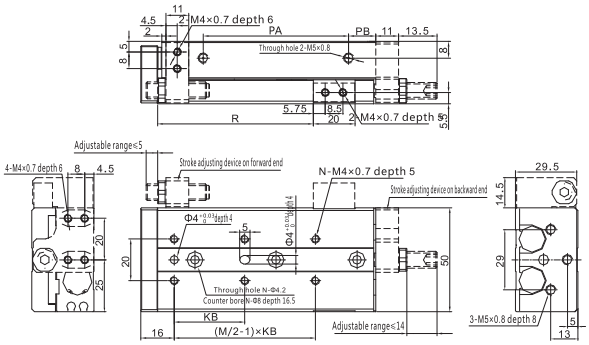


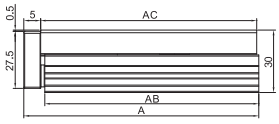


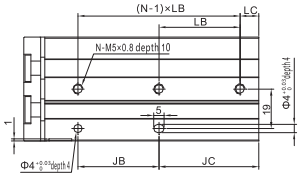


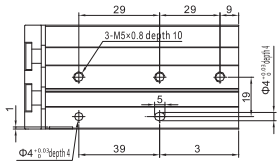


MXQ12X40

| Stroke/Symbol | A | AB | AC | JB | JC | KB | LB | LC | M | N | PA | PB | R |
|---|---|---|---|---|---|---|---|---|---|---|---|---|---|
| 10 | 76 | 66 | 67 | 32 | 18 | 28 | 32 | 18 | 4 | 2 | 32.5 | 13 | 35 |
| 20 | 76 | 66 | 67 | 32 | 18 | 28 | 32 | 18 | 4 | 2 | 32.5 | 13 | 45 |
| 30 | 86 | 76 | 77 | 40 | 20 | 38 | 40 | 20 | 4 | 2 | 42.5 | 13 | 55 |
| 40 | 103 | 93 | 94 | 39 | 38 | 34 | See figure | See figure | 6 | 3 | 59.5 | 13 | 65 |
| 50 | 113 | 103 | 104 | 39 | 48 | 34 | 39 | 9 | 6 | 3 | 69.5 | 13 | 75 |
| 75 | 157 | 147 | 148 | 72 | 59 | 36 | 36 | 23 | 8 | 4 | 113.5 | 13 | 99 |
| 100 | 182 | 172 | 173 | 72 | 84 | 36 | 36 | 12 | 10 | 6 | 134.5 | 17 | 124 |

### MXQ12(with hydraulic buffer)

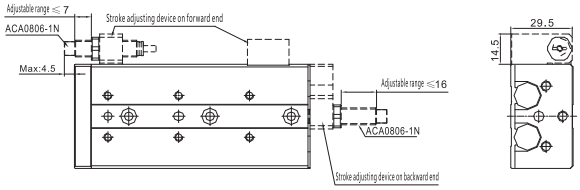


### MXQ16

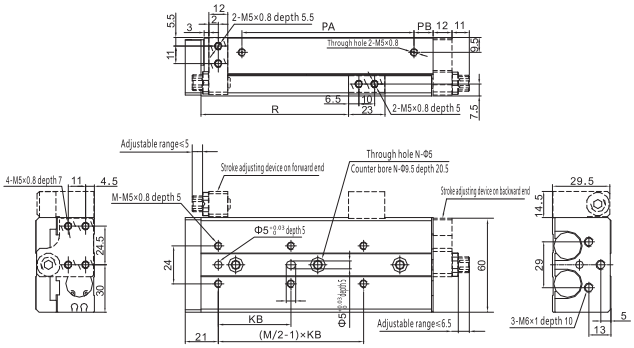


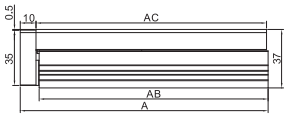


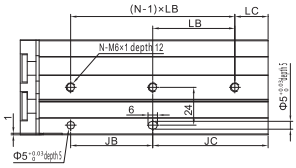


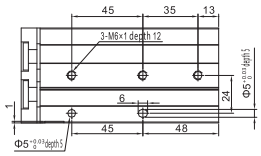


MXQ16X50

| Stroke/Symbol | A | AB | AC | JB | JC | KB | LB | LC | M | N | PA | PB | R |
|---|---|---|---|---|---|---|---|---|---|---|---|---|---|
| 10 | 89 | 77 | 78 | 39 | 18 | 38 | 39 | 18 | 4 | 2 | 40.5 | 12 | 28.5 |
| 20 | 89 | 77 | 78 | 39 | 18 | 38 | 39 | 18 | 4 | 2 | 40.5 | 12 | 38.5 |
| 30 | 99 | 87 | 88 | 48 | 19 | 48 | 48 | 19 | 4 | 2 | 50.5 | 12 | 48.5 |
| 40 | 109 | 97 | 98 | 58 | 19 | 58 | 58 | 19 | 4 | 2 | 60.5 | 12 | 58.5 |
| 50 | 125 | 113 | 114 | 45 | 48 | 40 | See figure | See figure | 6 | 3 | 70.5 | 18 | 68.5 |
| 75 | 157 | 145 | 146 | 52 | 73 | 46 | 52 | 21 | 6 | 3 | 108.5 | 12 | 93.5 |
| 100 | 200 | 188 | 189 | 88 | 80 | 44 | 44 | 36 | 8 | 4 | 151.5 | 12 | 118.5 |
| 125 | 225 | 213 | 214 | 88 | 105 | 44 | 44 | 17 | 10 | 5 | 176.5 | 12 | 143.5 |

### MXQ16(with hydraulic buffer)

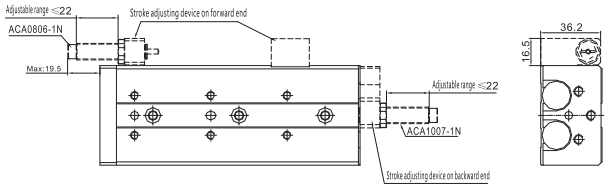

# Biaxial Type Precise Sliding Table Cylinder (Recirculating Roller)

## Dimension(mm):

### MXQ20

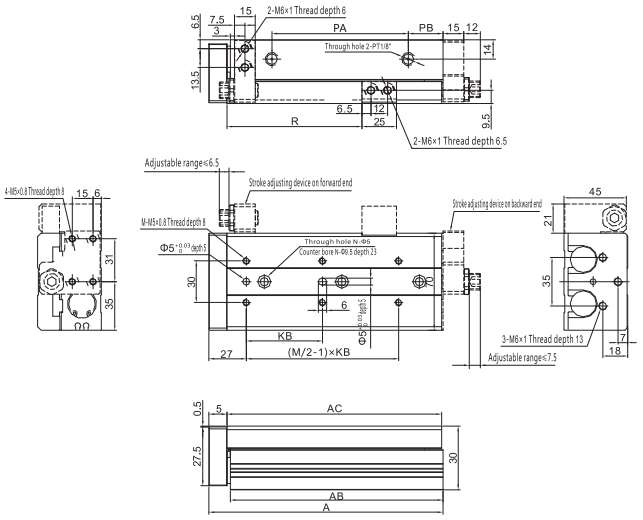


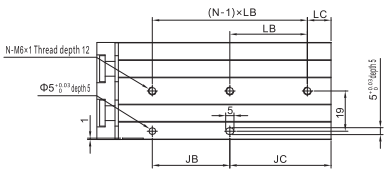


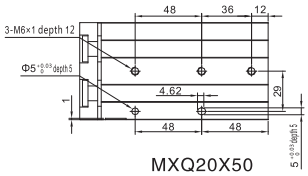


MXQ20X50

| Stroke/Symbol | A | AB | AC | JB | JC | KB | LB | LC | M | N | PA | PB | R |
|---|---|---|---|---|---|---|---|---|---|---|---|---|---|
| 10 | 108 | 92.5 | 94 | 50 | 18 | 45 | 46 | 22 | 4 | 2 | 46.5 | 16 | 32.5 |
| 20 | 108 | 92.5 | 94 | 50 | 18 | 40 | 46 | 22 | 4 | 2 | 46.5 | 16 | 42.5 |
| 30 | 108 | 92.5 | 94 | 50 | 18 | 48 | 46 | 22 | 4 | 2 | 46.5 | 16 | 52.5 |
| 40 | 118 | 102.5 | 104 | 56 | 22 | 58 | 56 | 22 | 4 | 2 | 56.5 | 16 | 62.5 |
| 50 | 136 | 120.5 | 122 | 48 | 48 | 52 | See figure | See figure | 6 | 3 | 72.5 | 18 | 72.5 |
| 75 | 169 | 153.5 | 155 | 56 | 73 | 55 | 56 | 17 | 6 | 3 | 98.5 | 25 | 97.5 |
| 100 | 226 | 210.5 | 212 | 112 | 74 | 50 | 56 | 18 | 8 | 4 | 155.5 | 25 | 122.5 |
| 125 | 254 | 238.5 | 240 | 118 | 96 | 55 | 59 | 37 | 8 | 4 | 183.5 | 25 | 147.5 |
| 150 | 282 | 266.5 | 268 | 124 | 118 | 62 | 62 | 56 | 8 | 4 | 211.5 | 25 | 172.5 |

### MXQ20(with hydraulic buffer)

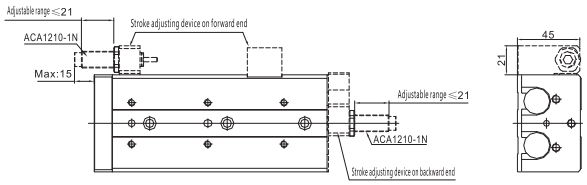


### MXQ25

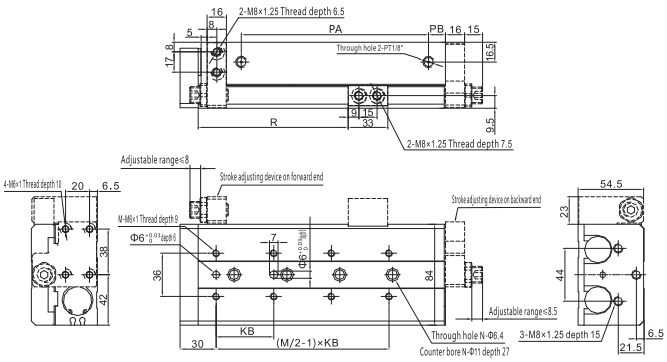


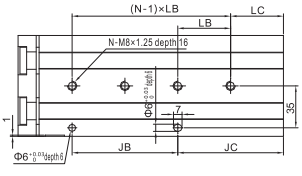


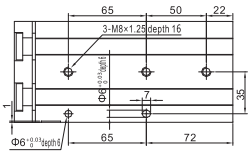


MXQ25X75

| Stroke/Symbol | A | AB | AC | JB | JC | KB | LB | LC | M | N | PA | PB | R |
|---|---|---|---|---|---|---|---|---|---|---|---|---|---|
| 10 | 123 | 105.5 | 107 | 55 | 23 | 55 | 55 | 23 | 4 | 2 | 58 | 12 | 35 |
| 20 | 123 | 105.5 | 107 | 55 | 23 | 46 | 55 | 23 | 4 | 2 | 58 | 12 | 45 |
| 30 | 123 | 105.5 | 107 | 55 | 23 | 55 | 55 | 23 | 4 | 2 | 58 | 12 | 55 |
| 40 | 133 | 115.5 | 117 | 65 | 23 | 65 | 65 | 23 | 4 | 2 | 68 | 12 | 65 |
| 50 | 157 | 139.5 | 141 | 80 | 32 | 75 | 80 | 32 | 4 | 2 | 92 | 14 | 75 |
| 75 | 182 | 164.5 | 166 | 65 | 72 | 60 | See figure | See figure | 6 | 3 | 117 | 12 | 100 |
| 100 | 221 | 203.5 | 205 | 88 | 88 | 48 | 44 | 44 | 8 | 4 | 156 | 12 | 125 |
| 125 | 274 | 256.5 | 258 | 132 | 97 | 60 | 66 | 31 | 8 | 4 | 209 | 12 | 150 |
| 150 | 299 | 281.5 | 283 | 132 | 122 | 65 | 66 | 56 | 8 | 4 | 234 | 12 | 175 |

### MXQ25(with hydraulic buffer)

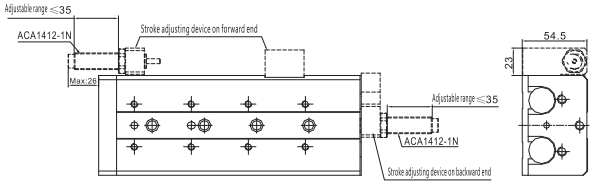

# Biaxial Type Precise Sliding Table Cylinder (Cross Roller Guide)

## Specification:

| Type | 6 | 8 | 12 | 16 | 20 | 25 |
|---|---|---|---|---|---|---|
| Motion | Double acting | | | | | |
| Fluid | Compressed air | | | | | |
| Working Pressure (MPa) | 0.15~0.7 | | | | | |
| Warrant endure-pressure (MPa) | 1.5 | | | | | |
| Ambient temperature range (℃) | -20~70 | | | | | |
| Speed range (mm/s) | 30~500 | | | | | |
| Cushion type | Fixed bumper on both ends/Hydraulic buffer | | | | | |
| Port size | M3×0.5 | | | | G1/8" | |

## How to order:

**MXS 20×30 S AS**

- Specification: MXS: Biaxial Type Precise Sliding Table Cylinder (Recirculating Roller)
- Bore: Φ6, Φ8, Φ12, Φ16, Φ20, Φ25
- Stroke
- Magnet code: S: with magnet
- External block type:
  - Blank: None External block (basic type)
  - A: Stroke adjusting screw on both ends
  - B: Hydraulic buffer on both ends
  - AS: Stroke adjusting screw on forward end
  - BS: Hydraulic buffer on forward end
  - AF: Stroke adjusting screw on backward end
  - BF: Hydraulic buffer on backward end

## Symbol:

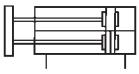

MXS

## Product feature:

1. With cross–roller guide and integration design of the cylinder, it possesees the characteristics of high strength, high precision and high load. It also possesses great straightness and no–rotation precision to be more suitably used in precision assembly situation.
2. The slide block comes with installed dowel holes.
3. Floating connector design is adopted to prevent piston rod from bearing extra load torque.
4. With double piston rods, it can get double output.
5. The body comes with installed dowel holes.
6. The bottom and end face of the body attaches installed screw holes.

## Inner structure drawing:

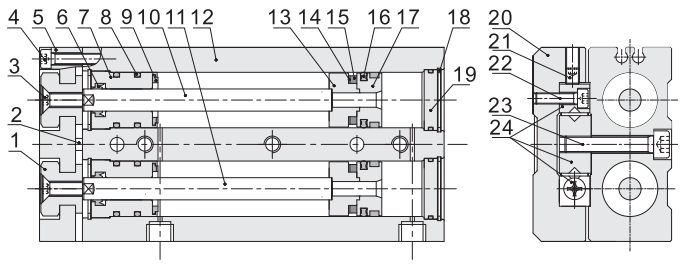


| Number | Name | Number | Name |
|---|---|---|---|
| 1 | Floating joint | 13 | Magnet seat |
| 2 | Fenders | 14 | Magnet gasket |
| 3 | Hexagon socket countersunk head screw | 15 | Magnet |
| 4 | Socket head cap screw | 16 | Piston O-ring |
| 5 | Fixed plate | 17 | Piston |
| 6 | Axis core O-ring | 18 | C-shaped retaining ring |
| 7 | Front cover | 19 | Rear cover |
| 8 | O-ring | 20 | Slide |
| 9 | Fenders | 21 | Set screw |
| 10 | Piston rod A | 22 | Socket head cap screw |
| 11 | Piston rod B | 23 | Socket head cap screw |
| 12 | Body | 24 | Cross Roller Guide Combination |

# Biaxial Type Precise Sliding Table Cylinder (Cross Roller Guide)

## Dimension(mm):

### MXS6

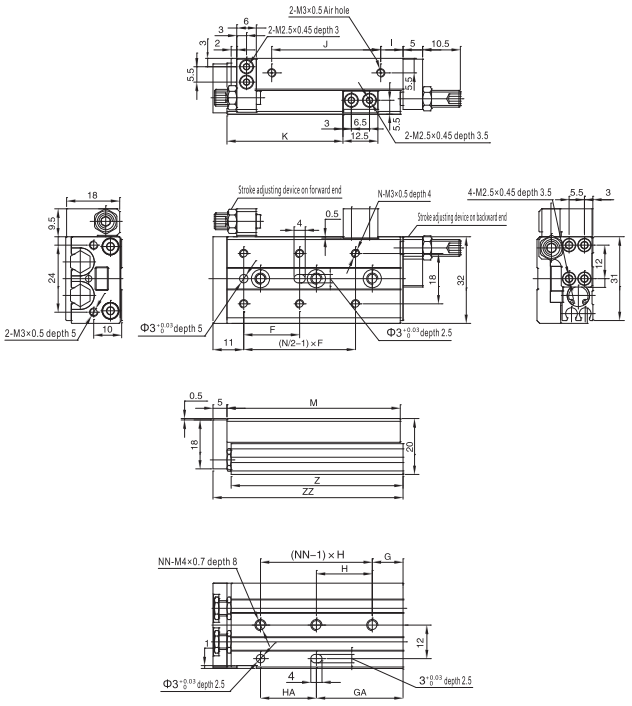


| Stroke/Symbol | F | N | G | H | NN | GA | HA | I | J | K | M | Z | ZZ |
|---|---|---|---|---|---|---|---|---|---|---|---|---|---|
| 10 | 20 | 4 | 6 | 25 | 2 | 11 | 20 | 10 | 17 | 22.5 | 42 | 41.5 | 48 |
| 20 | 30 | 4 | 6 | 35 | 2 | 21 | 20 | 10 | 27 | 32.5 | 52 | 51.5 | 58 |
| 30 | 20 | 6 | 11 | 20 | 3 | 31 | 20 | 7 | 40 | 42.5 | 62 | 61.5 | 68 |
| 40 | 28 | 6 | 13 | 30 | 3 | 43 | 30 | 19 | 50 | 52.5 | 84 | 83.5 | 90 |
| 50 | 38 | 6 | 17 | 24 | 4 | 41 | 48 | 25 | 60 | 62.5 | 100 | 99.5 | 106 |

### MXS8

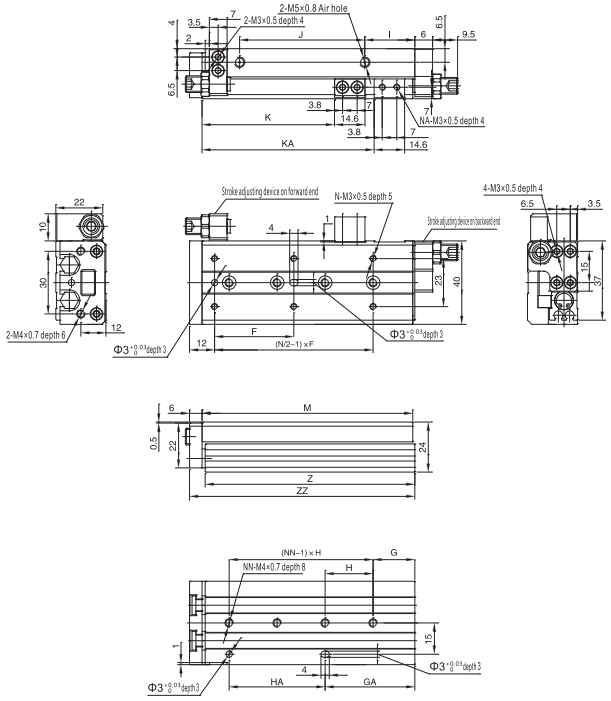


| Stroke/Symbol | F | N | G | H | NN | GA | HA | I | J | K | KA | NA | M | Z | ZZ |
|---|---|---|---|---|---|---|---|---|---|---|---|---|---|---|---|
| 10 | 25 | 4 | 9 | 28 | 2 | 17 | 20 | 13 | 19.5 | 23.5 | — | 2 | 49 | 48.5 | 56 |
| 20 | 25 | 4 | 12 | 30 | 2 | 12 | 30 | 8.5 | 29 | 33.5 | — | 2 | 54 | 53.5 | 61 |
| 30 | 40 | 4 | 13 | 20 | 3 | 33 | 20 | 9.5 | 39 | 43.5 | — | 2 | 65 | 64.5 | 72 |
| 40 | 50 | 4 | 15 | 28 | 3 | 43 | 28 | 10.5 | 56 | 53.5 | — | 2 | 83 | 82.5 | 90 |
| 50 | 38 | 6 | 20 | 23 | 4 | 43 | 46 | 24.5 | 60 | 63.5 | 82.5 | 4 | 101 | 100.5 | 108 |
| 75 | 50 | 6 | 27 | 28 | 5 | 83 | 56 | 38.5 | 96 | 88.5 | 132.5 | 4 | 151 | 150.5 | 158 |

### MXS8(with hydraulic buffer)

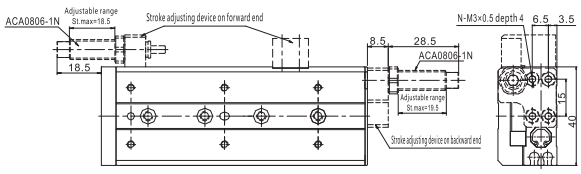

MXS

# Biaxial Type Precise Sliding Table Cylinder (Cross Roller Guide)

## Dimension(mm):

### MXS12

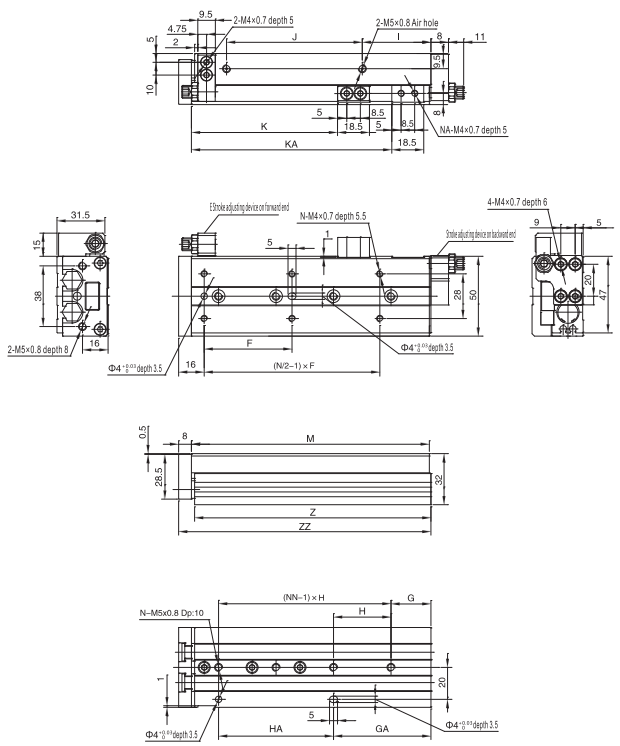

MXS

| Stroke/Symbol | F | N | G | H | NN | GA | HA | I | J | K | KA | NA | M | Z | ZZ |
|---|---|---|---|---|---|---|---|---|---|---|---|---|---|---|---|
| 10 | 35 | 4 | 15 | 40 | 2 | 15 | 40 | 10 | 40 | 26.5 | — | 2 | 71 | 70 | 80 |
| 20 | 35 | 4 | 15 | 40 | 2 | 15 | 40 | 10 | 40 | 36.5 | — | 2 | 71 | 70 | 80 |
| 30 | 35 | 4 | 15 | 40 | 2 | 15 | 40 | 10 | 40 | 46.5 | — | 2 | 71 | 70 | 80 |
| 40 | 50 | 4 | 17 | 25 | 3 | 42 | 25 | 10 | 52 | 56.5 | — | 2 | 83 | 82 | 92 |
| 50 | 35 | 6 | 15 | 36 | 3 | 51 | 36 | 22 | 60 | 66.5 | — | 2 | 103 | 102 | 112 |
| 75 | 55 | 6 | 25 | 36 | 4 | 61 | 72 | 43 | 85 | 91.5 | 125.5 | 4 | 149 | 148 | 158 |
| 100 | 65 | 6 | 35 | 38 | 5 | 111 | 76 | 52 | 130 | 116.5 | 179.5 | 4 | 203 | 202 | 212 |

### MXS12(with hydraulic buffer)

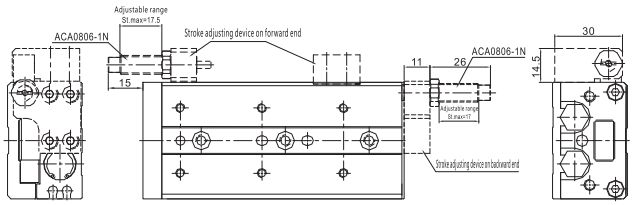


### MXS16

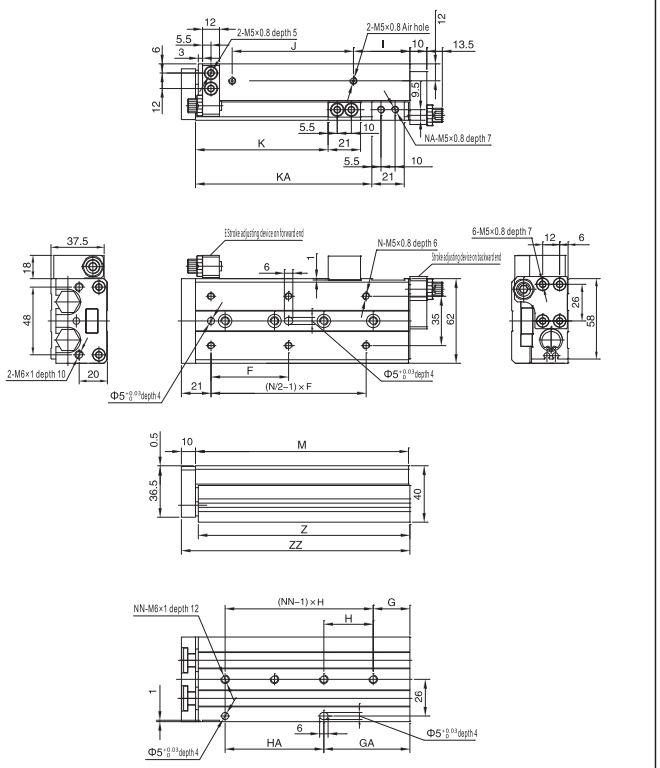


| Stroke/Symbol | F | N | G | H | NN | GA | HA | I | J | K | KA | NA | M | Z | ZZ |
|---|---|---|---|---|---|---|---|---|---|---|---|---|---|---|---|
| 10 | 35 | 4 | 16 | 40 | 2 | 16 | 40 | 10 | 40 | 29 | — | 2 | 76 | 75 | 87 |
| 20 | 35 | 4 | 16 | 40 | 2 | 16 | 40 | 10 | 40 | 39 | — | 2 | 76 | 75 | 87 |
| 30 | 35 | 4 | 16 | 40 | 2 | 16 | 40 | 10 | 40 | 49 | — | 2 | 76 | 75 | 87 |
| 40 | 40 | 4 | 16 | 50 | 2 | 16 | 50 | 10 | 50 | 59 | — | 2 | 86 | 85 | 97 |
| 50 | 30 | 6 | 21 | 30 | 3 | 51 | 30 | 15 | 60 | 69 | — | 2 | 101 | 100 | 112 |
| 75 | 55 | 6 | 26 | 35 | 4 | 61 | 70 | 40 | 85 | 94 | 125 | 4 | 151 | 150 | 162 |
| 100 | 65 | 6 | 39 | 35 | 5 | 109 | 70 | 55 | 118 | 119 | 173 | 4 | 199 | 198 | 210 |
| 125 | 70 | 8 | 19 | 35 | 7 | 159 | 70 | 68 | 155 | 144 | 223 | 4 | 249 | 248 | 260 |

### MXS16(with hydraulic buffer)

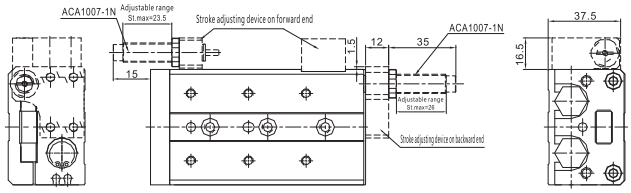

# Biaxial Type Precise Sliding Table Cylinder (Cross Roller Guide)

## Dimension(mm):

### MXS20

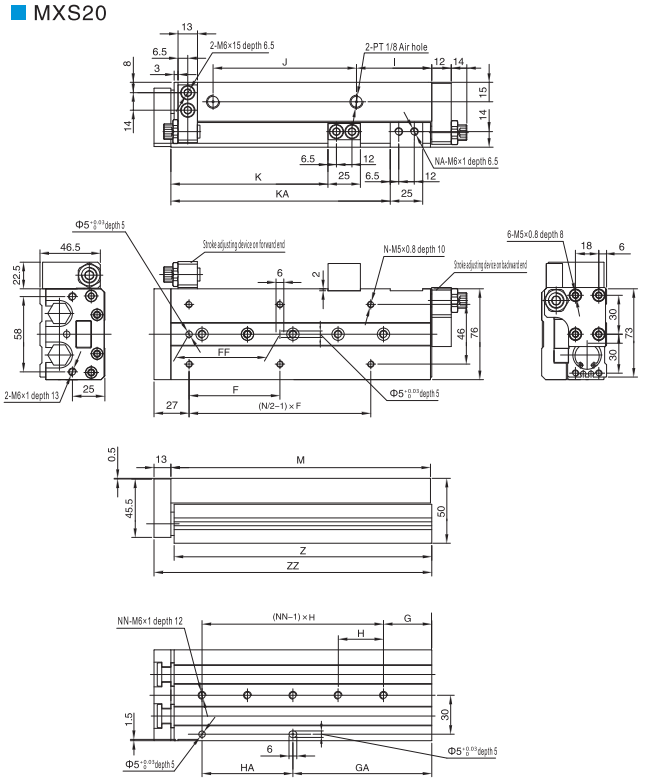


| Stroke/Symbol | F | FF | N | G | H | NN | GA | HA | I | J | K | KA | NA | M | Z | ZZ |
|---|---|---|---|---|---|---|---|---|---|---|---|---|---|---|---|---|
| 10 | 50 | 40 | 4 | 15 | 45 | 2 | 25 | 35 | 10 | 44 | 31 | — | 2 | 83 | 81.5 | 97 |
| 20 | 50 | 40 | 4 | 15 | 45 | 2 | 25 | 35 | 10 | 44 | 41 | — | 2 | 83 | 81.5 | 97 |
| 30 | 50 | 40 | 4 | 15 | 45 | 2 | 25 | 35 | 10 | 44 | 51 | — | 2 | 83 | 81.5 | 97 |
| 40 | 60 | 50 | 4 | 15 | 55 | 2 | 35 | 35 | 10 | 54 | 61 | — | 2 | 93 | 91.5 | 107 |
| 50 | 35 | 35 | 6 | 15 | 35 | 3 | 50 | 35 | 10 | 69 | 71 | — | 2 | 108 | 106.5 | 122 |
| 75 | 60 | 60 | 6 | 19 | 35 | 4 | 54 | 70 | 10 | 108 | 96 | — | 2 | 147 | 145.5 | 161 |
| 100 | 70 | 70 | 6 | 37 | 35 | 5 | 107 | 70 | 58 | 113 | 121 | 169 | 4 | 200 | 198.5 | 214 |
| 125 | 70 | 70 | 8 | 41 | 38 | 6 | 155 | 76 | 70 | 155 | 146 | 223 | 4 | 254 | 252.5 | 268 |
| 150 | 80 | 80 | 8 | 19 | 44 | 7 | 195 | 88 | 87 | 190 | 171 | 275 | 4 | 306 | 304.5 | 320 |

### MXS20(with hydraulic buffer)

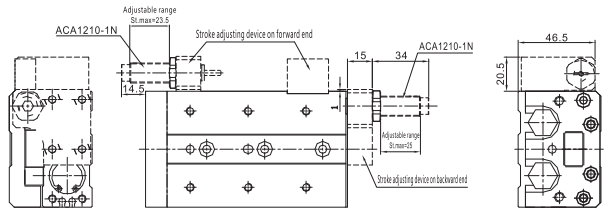


### MXS25

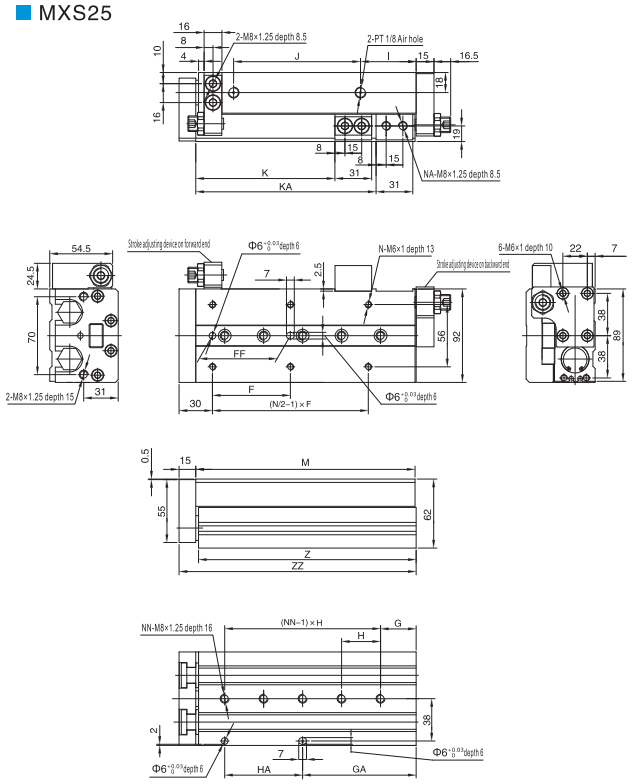


| Stroke/Symbol | F | FF | N | G | H | NN | GA | HA | I | J | K | KA | NA | M | Z | ZZ |
|---|---|---|---|---|---|---|---|---|---|---|---|---|---|---|---|---|
| 10 | 50 | 40 | 4 | 22 | 45 | 2 | 22 | 45 | 12 | 47 | 35 | — | 2 | 92 | 90.5 | 108 |
| 20 | 50 | 40 | 4 | 22 | 45 | 2 | 22 | 45 | 12 | 47 | 45 | — | 2 | 92 | 90.5 | 108 |
| 30 | 50 | 40 | 4 | 22 | 45 | 2 | 22 | 45 | 12 | 47 | 55 | — | 2 | 92 | 90.5 | 108 |
| 40 | 60 | 50 | 4 | 22 | 55 | 2 | 22 | 55 | 12 | 57 | 65 | — | 2 | 102 | 100.5 | 118 |
| 50 | 35 | 35 | 6 | 20 | 35 | 3 | 55 | 35 | 12 | 70 | 75 | — | 2 | 115 | 113.5 | 131 |
| 75 | 60 | 60 | 6 | 26 | 35 | 4 | 61 | 70 | 33 | 90 | 100 | — | 2 | 156 | 154.5 | 172 |
| 100 | 70 | 70 | 6 | 32 | 35 | 5 | 102 | 70 | 50 | 114 | 125 | 162 | 4 | 197 | 195.5 | 213 |
| 125 | 75 | 75 | 8 | 40 | 38 | 6 | 154 | 76 | 67 | 155 | 150 | 218 | 4 | 255 | 253.5 | 271 |
| 150 | 80 | 80 | 8 | 30 | 40 | 7 | 190 | 80 | 82 | 180 | 175 | 258 | 4 | 295 | 293.5 | 311 |

### MXS25(with hydraulic buffer)

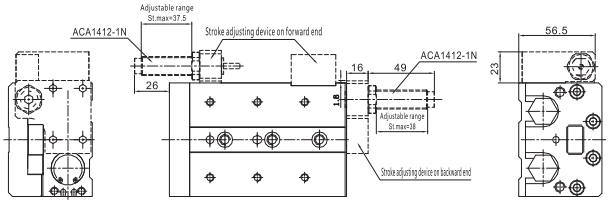

# Guide Cylinder

## Specification:

**GDS 50**

Series

| |
|---|
| GDS |
| GDH |
| GDM |

Bore

| | |
|---|---|
| Φ12 | Φ40 |
| Φ16 | Φ50 |
| Φ20 | Φ63 |
| Φ25 | Φ80 |
| Φ32 | Φ100 |

## Product feature:

1.Oriented equipment can avoid piston rod rotating and can afford higher loaden torque.
2.Oriented equipments show high precision guide on workpiece transmission and another applications.
3.Two guiding forms: rolling bearings and sliding bearings.
4.There are mounting ports with multiplicate direction for multiplicate– directed install.
5.Oriented equipment can be connected with ISO6432 cylinder or ISO6431 cylidner when using.

## Dimension(mm):

### GDS Dimension

Φ12~Φ16

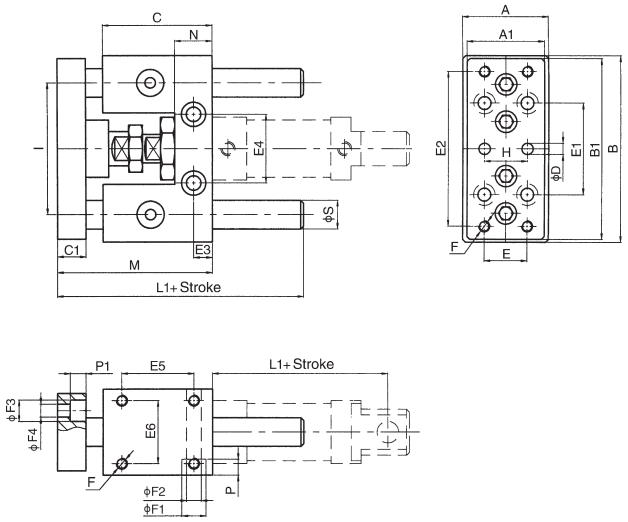


| Bore/Symbol | A | A1 | B | B1 | C | C1 | D | E | E1 | E2 | E3 | E4 | E5 |
|---|---|---|---|---|---|---|---|---|---|---|---|---|---|
| 10 | 30 | 27 | 65 | 63 | 38 | 10 | 4 | 15 | 32 | 54 | 6.5 | 24 | 25 |
| 16 | 30 | 27 | 65 | 63 | 38 | 10 | 4 | 15 | 32 | 54 | 6.5 | 24 | 25 |

| Bore/Symbol | E6 | F | F1 | F2 | F3 | F4 | H | I | L | L1 | M | N | P | S |
|---|---|---|---|---|---|---|---|---|---|---|---|---|---|---|
| 10 | 22 | M4 | 8.5 | 5.1 | 7.5 | 4.5 | 15 | 46 | 70 | 53 | 54 | 13 | 5.5 | 10 |
| 16 | 22 | M4 | 8.5 | 5.1 | 7.5 | 4.5 | 15 | 46 | 70 | 60 | 54 | 13 | 5.5 | 10 |

### GDS Dimension

Φ20~Φ25

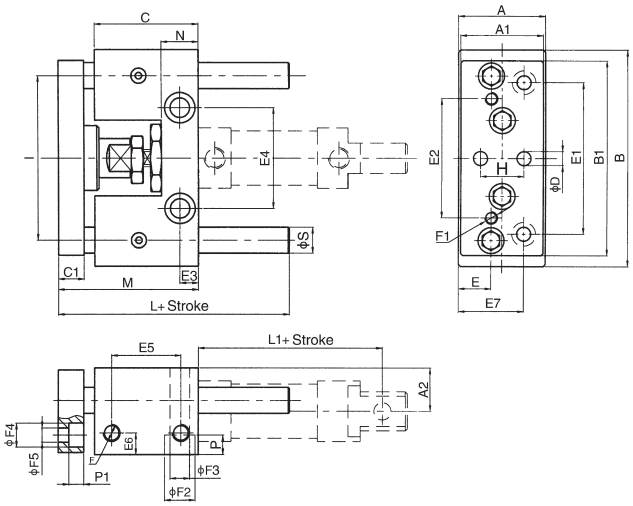


| Bore/Symbol | A | A1 | A2 | B | B | C | C1 | D | E | E1 | E2 | E3 | E4 | E5 | E6 |
|---|---|---|---|---|---|---|---|---|---|---|---|---|---|---|---|
| 20 | 40 | 38 | 24 | 100 | 90 | 48 | 12 | 6 | 15 | 70 | 55 | 8.5 | 46.5 | 32 | 10 |
| 25 | 40 | 38 | 24 | 100 | 90 | 48 | 12 | 6 | 15 | 70 | 55 | 8.5 | 46.5 | 32 | 10 |

| Bore/Symbol | E7 | F | F1 | F2 | F3 | F4 | F5 | H | I | L | L1 | M | N | P | S |
|---|---|---|---|---|---|---|---|---|---|---|---|---|---|---|---|
| 20 | 30 | M8 | 24 | 14 | 9 | 11 | 6.5 | 20 | 76 | 77 | 71 | 65 | 17 | 9 | 12 |
| 25 | 30 | M8 | 24 | 14 | 9 | 11 | 6.5 | 20 | 76 | 77 | 76 | 71 | 17 | 9 | 12 |

# Guide Cylinder

## Dimension(mm):

### GDS Dimension

Φ32~Φ100

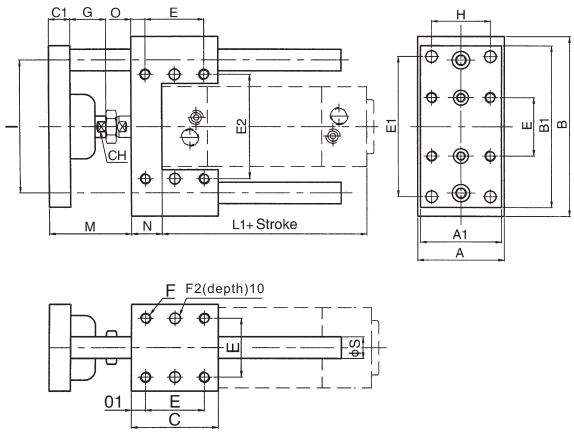


| Bore/Symbol | A | A1 | B | B1 | C | C1 | CH | D | E | E1 | E2 | F |
|---|---|---|---|---|---|---|---|---|---|---|---|---|
| 32 | 48 | 45 | 100 | 90 | 48 | 12 | 12 | 6 | 32.5 | 78 | 58 | M6 |
| 40 | 56 | 53 | 106 | 105 | 58 | 15 | 15 | 6 | 38 | 84 | 64 | M6 |
| 50 | 66 | 63 | 125 | 120 | 59 | 15 | 16 | 6 | 46.5 | 100 | 80 | M8 |
| 63 | 76 | 73 | 132 | 127 | 76 | 15 | 16 | 6 | 56.5 | 105 | 95 | M8 |
| 80 | 98 | 95 | 165 | 160 | 90 | 16 | 20 | 6 | 50 | 130 | 130 | M10 |
| 100 | 118 | 115 | 185 | 180 | 110 | 16 | 20 | 6 | 70 | 150 | 150 | M10 |

| Bore/Symbol | F1 | F2 | G | H | I | L | L1 | M | N | O | O1 | S |
|---|---|---|---|---|---|---|---|---|---|---|---|---|
| 32 | 6.5 | 6 | 20 | 31 | 74 | 108 | 94 | 46 | 17 | 7.8 | 7.8 | 12 |
| 40 | 6.5 | 6 | 21 | 36 | 80 | 120 | 105 | 52 | 21 | 10 | 10 | 12 |
| 50 | 8.5 | 6 | 24 | 45 | 96 | 130 | 106 | 65 | 25 | 6.3 | 6.3 | 16 |
| 63 | 8.5 | 6 | 24 | 45 | 104 | 145 | 121 | 65 | 25 | 9.8 | 9.8 | 16 |
| 80 | 11 | 6 | 31 | 56 | 130 | 170 | 128 | 71 | 34 | 20 | 9 | 20 |
| 100 | 11 | 6 | 31 | 56 | 152 | 190 | 138 | 71 | 39 | 20 | 10.5 | 20 |

### GDH、GDM Dimension

Φ32~Φ100

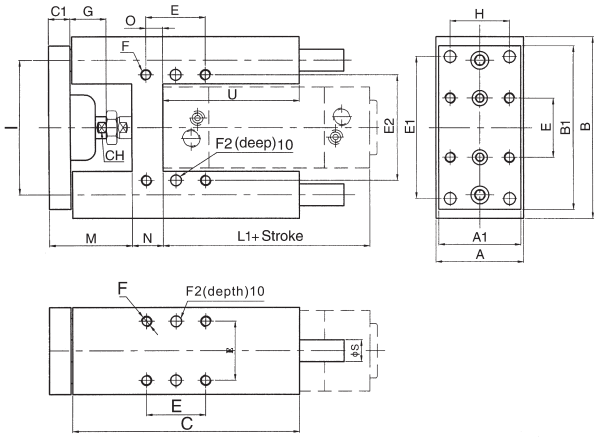


| Bore/Symbol | A | A1 | B | B1 | C | C1 | D | E | E1 | E2 | F | F1 |
|---|---|---|---|---|---|---|---|---|---|---|---|---|
| 32 | 49 | 45 | 97 | 90 | 125 | 12 | 6 | 32.5 | 78 | 61 | M6 | 6.5 |
| 40 | 58 | 54 | 115 | 110 | 139 | 15 | 6 | 38 | 84 | 69 | M6 | 6.5 |
| 50 | 69 | 63 | 137 | 130 | 148 | 15 | 6 | 46.5 | 100 | 85 | M8 | 8.5 |
| 63 | 85 | 79 | 152 | 145 | 182 | 15 | 6 | 56.5 | 105 | 100 | M8 | 8.5 |
| 80 | 105 | 99 | 189 | 180 | 215 | 20 | 6 | 72 | 130 | 130 | M10 | 11 |
| 100 | 129 | 120 | 213 | 200 | 220 | 20 | 6 | 89 | 150 | 150 | M10 | 11 |

| Bore/Symbol | F2 | G | H | I | L | L1 | M | N | O | ΦS | CH | U |
|---|---|---|---|---|---|---|---|---|---|---|---|---|
| 32 | 6 | 18 | 31 | 74 | 177 | 94 | 47 | 17 | 4.3 | 12 | 13 | 76 |
| 40 | 6 | 21 | 36 | 87 | 192 | 105 | 53 | 21 | 11 | 12 | 15 | 81 |
| 50 | 6 | 24 | 45 | 104 | 205 | 106 | 63 | 26 | 18.5 | 16 | 22 | 78 |
| 63 | 6 | 24 | 45 | 119 | 237 | 121 | 62 | 26 | 15.3 | 16 | 22 | 111 |
| 80 | 6 | 31 | 56 | 148 | 280 | 128 | 76 | 34 | 21 | 20 | 27 | 128 |
| 100 | 6 | 31 | 56 | 173 | 280 | 138 | 76 | 39 | 24.5 | 20 | 27 | 128 |

GDS

### GDH、GDM Dimension

Φ12~Φ25

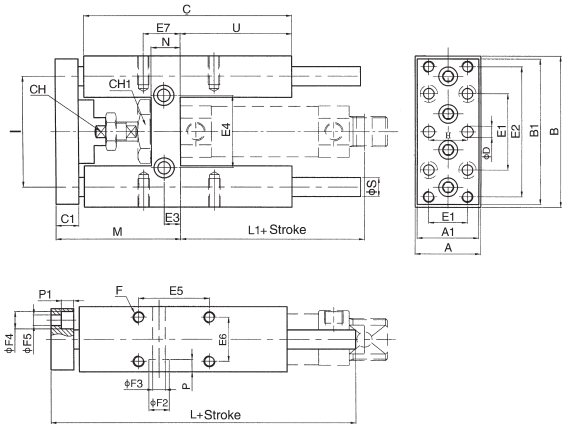


| Bore/Symbol | A | A1 | B | B1 | C | C1 | CH | CH1 | D | E | E1 | E2 | E3 | E4 | E5 | E6 |
|---|---|---|---|---|---|---|---|---|---|---|---|---|---|---|---|---|
| 12 | 30 | 27 | 65 | 63 | 75 | 10 | 8 | 19 | 4 | 15 | 32 | 54 | 6.5 | 15 | 24 | 22 |
| 16 | 30 | 27 | 65 | 63 | 75 | 10 | 8 | 19 | 4 | 15 | 32 | 54 | 6.5 | 15 | 24 | 22 |
| 20 | 34 | 32 | 79 | 76 | 108 | 12 | 12 | 27 | 6 | 20 | 40 | 68 | 8.5 | 20 | 38 | 23 |
| 25 | 34 | 32 | 79 | 76 | 108 | 12 | 12 | 27 | 6 | 20 | 40 | 68 | 8.5 | 20 | 38 | 23 |

| Bore/Symbol | E7 | F1 | F2 | F3 | F4 | F5 | G | H | I | L | L1 | M | N | P | S | U |
|---|---|---|---|---|---|---|---|---|---|---|---|---|---|---|---|---|
| 12 | M4 | M4 | 8.5 | 5.1 | 7.5 | 4.5 | 12 | 15 | 46 | 130 | 53 | 51 | 15 | 5.5 | 8 | 37 |
| 16 | M4 | M4 | 8.5 | 5.1 | 7.5 | 4.5 | 12 | 15 | 46 | 130 | 60 | 51 | 15 | 5.5 | 8 | 37 |
| 20 | M6 | M5 | 10.5 | 6.5 | 9 | 5.5 | 22 | 20 | 58 | 159 | 71 | 65 | 15 | 6.5 | 10 | 58 |
| 25 | M6 | M5 | 10.5 | 6.5 | 9 | 5.5 | 17 | 20 | 58 | 159 | 76 | 65 | 15 | 6.5 | 10 | 58 |

# Rotating Cylinder

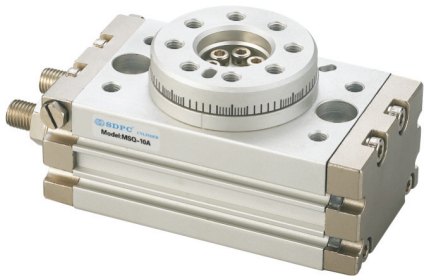

## Specification:

| Type | | 2 | 3 | 7 | 10 | 20 | 30 | 50 | 70 | 100 | 200 |
|---|---|---|---|---|---|---|---|---|---|---|---|
| Motion | | Double piston rack and pinion double acting type | | | | | | | | | |
| Fluid | | Compressed Air | | | | | | | | | |
| Working Pressure (MPa) | | With adjusting screw: 0.1~0.7 | | | | With adjusting screw: 0.1~1; With hydraulic buffer : 0.1~0.6 | | | | | |
| Warrant endure-pressure (MPa) | | 1.5 | | | | | | | | | |
| Ambient temperature range (℃) | | 0~60 | | | | | | | | | |
| Theoretical torque (Nm)(0.5Mpa) | | 0.2 | 0.33 | 0.63 | 1.1 | 2.2 | 2.8 | 5.0 | 7.5 | 11.0 | 22.0 |
| Rotation angle range ° | | 0~190 | | | | | | | | | |
| Cushion type | | With adjusting screw: Bumper | | | | With adjusting screw: Bumper; With hydraulic buffer | | | | | |
| Port size | Front | M5×0.8 | | | | | G1/8" | | | | |
| | Side | | | | | | M5×0.8 | | | | |

## Symbol:

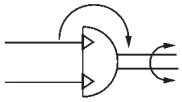

## How to order:

**MSQ 20 A**

- Specification: HRQ: Rotating Cylinder
- Type: 2 3 7 10 20 30 50 70 100 200
- Cushion type:

| | |
|---|---|
| 2 3 7 | Blank: Fixed bumper |
| 10 20 30 50 | Blank: Fixed bumper |
| 70 100 200 | A: Hydraulic buffer |

## Product feature:

MSQ

1. With pinion and rack structure, it runs smoothly.
2. Double cylinders structure can get double output.
3. The workbench with high process precision and accurate positioning is convenient for loading and installation.
4. Through hole is in the middle of the workbench for tubulation.
5. The two sides(10~200) or bottom(2~7) of the cylinder body both have dowel holes and are easy for install–ation and using.
6. Adjusting screw fixed buffer and oil buffer are optional. And the biggest buffer energy of the oil buffer is 3 to 5 times larger than that of adjusting screw fixed buffer with better buffering effect.

Notes:HRQ2、3、7 only has adjusting screw fixed buffer, no oil buffer.

# Rotating Cylinder

## Inner structure drawing:

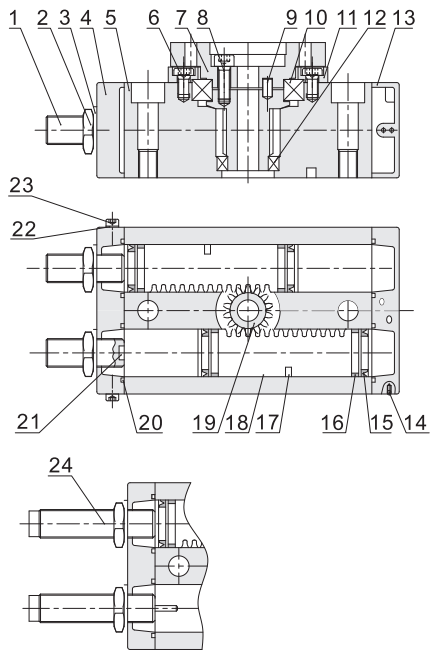


| Number | Name | Number | Name |
|---|---|---|---|
| 1 | Adjusting screw | 13 | Rear cover |
| 2 | Nut | 14 | Steel ball |
| 3 | Sealing gasket | 15 | Y-ring |
| 4 | Front cover | 16 | Wearing ring |
| 5 | Cylinder barrel | 17 | Magnet |
| 6 | Socket head cap screws | 18 | Rack |
| 7 | Dial | 19 | Gear |
| 8 | Socket head cap screws | 20 | O-ring |
| 9 | Locating pin | 21 | Fenders |
| 10 | Ball bearing | 22 | O-ring |
| 11 | Platen | 23 | Hexagon screws |
| 12 | Ball bearing | 24 | Hydraulic buffer |

## Dimension(mm):

MSQ2,3,7

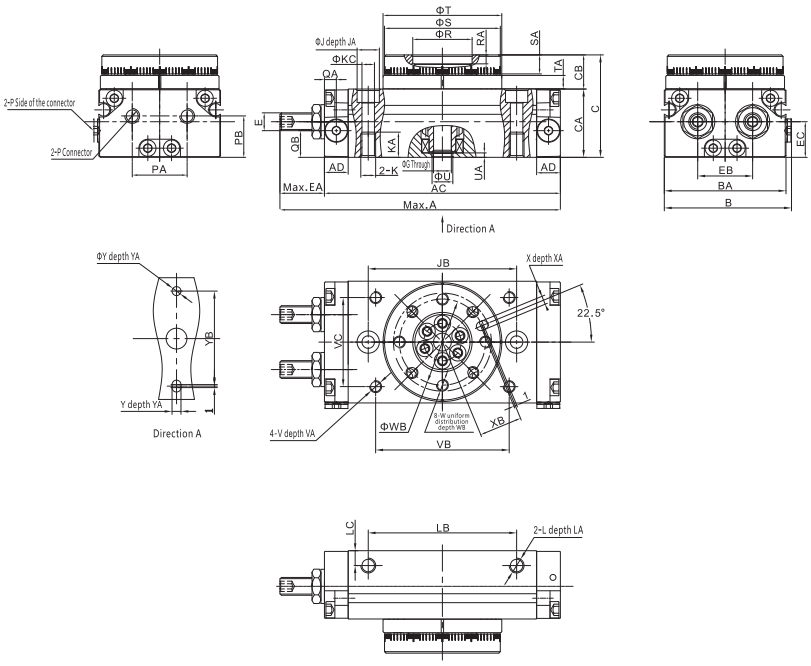


| Bore/Symbol | A | AC | AD | B | BA | C | CA | CB | E | EA | EB | EC | G |
|---|---|---|---|---|---|---|---|---|---|---|---|---|---|
| 2 | 76 | 64 | 8 | 32 | 30 | 28 | 18 | 10 | M5×0.8 | 12 | 12 | 9.5 | 4 |
| 3 | 82 | 70 | 8 | 36.5 | 34.4 | 30.5 | 20.5 | 10 | M5×0.8 | 12 | 15.5 | 10.5 | 5 |
| 7 | 94.5 | 79.5 | 8 | 43 | 41 | 34.5 | 23 | 11.5 | M6×1.0 | 15 | 18.5 | 12 | 6 |

| Bore/Symbol | J | JA | JB | K | KA | KC | L | LA | LB | LC | P | PA |
|---|---|---|---|---|---|---|---|---|---|---|---|---|
| 2 | 6 | 3.5 | 37 | M4×0.7 | 7.5 | 3.5 | M4×0.7 | 4 | 35 | 4.5 | M5×0.8 | 12.5 |
| 3 | 7.5 | 4.5 | 43 | M5×0.8 | 8.5 | 4.5 | M4×0.7 | 4 | 40 | 4.5 | M5×0.8 | 15.5 |
| 7 | 7.5 | 4.5 | 50 | M5×0.8 | 8.5 | 4.5 | M5×0.8 | 5 | 50 | 5 | M5×0.8 | 18.5 |

| Bore/Symbol | PB | Q | QA | QB | R | RA | S | SA | T | TA | U | UA |
|---|---|---|---|---|---|---|---|---|---|---|---|---|
| 2 | 10. | M5×0.8 | 4 | 6 | 14(H9) | 2.5 | 29(h9) | 5.5 | 29.5(H9) | 4 | 5(H9) | 1.5 |
| 3 | 12 | M5×0.8 | 4 | 7.5 | 17(H9) | 2.5 | 33(h9) | 5.5 | 34(H9) | 4 | 6(H9) | 1.5 |
| 7 | 14 | M5×0.8 | 4 | 9 | 20(H9) | 3 | 39(h9) | 6.5 | 40(H9) | 4.5 | 7(H9) | 1.5 |

| Bore/Symbol | V | VA | VB | VC | W | WA | WB | X | XA | XB | Y | YA | YB |
|---|---|---|---|---|---|---|---|---|---|---|---|---|---|
| 2 | M3×0.5 | 3.5 | 34 | 18.5 | M3×0.5 | 5.5 | 21 | 2(H9) | 2 | 10.5 | 2(H9) | 2 | 24 |
| 3 | M3×0.5 | 3.5 | 38 | 23 | M3×0.5 | 5.5 | 25 | 2(H9) | 2 | 12.5 | 2(H9) | 2 | 28 |
| 7 | M4×0.7 | 4.5 | 45 | 30 | M4×0.7 | 6.5 | 29 | 3(H9) | 3 | 14.5 | 3(H9) | 3 | 32 |

## Rotating Cylinder

### Dimension(mm):

MSQ10~50

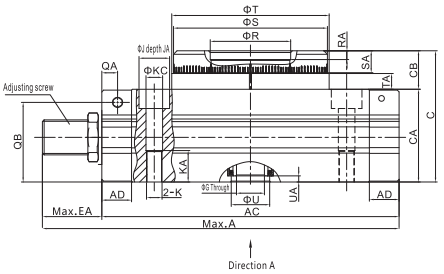


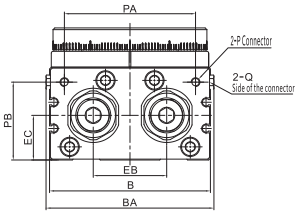


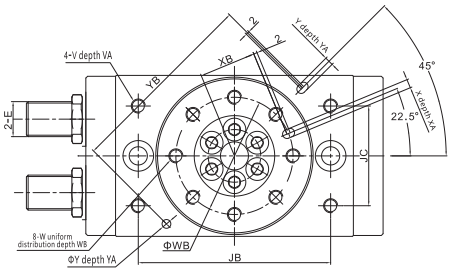


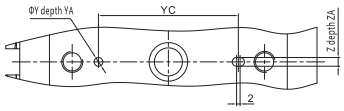


Direction A

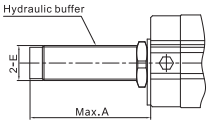


With Hydraulic buffer

| Bore/Symbol | A(Adjusting screw) | A(Hydraulic buffer) | AC | AD | B | BA | C | CA | CB | E |
|---|---|---|---|---|---|---|---|---|---|---|
| 10 | 120.5 | 109.5 | 92 | 9.5 | 50 | 54 | 47 | 37 | 13 | M10×1.0 |
| 20 | 156 | 143 | 117 | 11 | 65 | 69 | 54 | 37 | 17 | M12×1.0 |
| 30 | 165.5 | 152.5 | 127 | 11.5 | 70 | 74 | 57 | 40 | 17 | M12×1.0 |
| 50 | 203 | 183.5 | 152 | 15 | 80 | 84 | 66 | 46 | 20 | M14×1.5 |

| Bore/Symbol | EA(Adjusting screw) | EA(Hydraulic buffer) | EB | EC | G | J | JA | JB | JC | K |
|---|---|---|---|---|---|---|---|---|---|---|
| 10 | 28.5 | 17.5 | 20.5 | 15.5 | 5 | 11 | 6.5 | 60 | 27 | M8×1.25 |
| 20 | 39 | 26 | 27.5 | 16 | 9 | 14 | 8.5 | 76 | 34 | M10×1.5 |
| 30 | 38.5 | 25.5 | 29 | 18.5 | 9 | 14 | 8.5 | 84 | 37 | M10×1.5 |
| 50 | 51 | 31.5 | 38 | 22 | 10 | 18 | 10.5 | 100 | 50 | M12×1.25 |

| Bore/Symbol | KA | KC | P | PA | PB | Q | QA | QB | R | RA | S | SA | T |
|---|---|---|---|---|---|---|---|---|---|---|---|---|---|
| 10 | 12 | 6.5 | M5×0.8 | 34.5 | 28 | M5×0.8 | 4.5 | 29 | 20(H9) | 4.5 | 45(h9) | 8 | 46(h9) |
| 20 | 15 | 8.5 | M5×0.8 | 47 | 30 | M5×0.8 | 6 | 30 | 28(H9) | 6.5 | 60(h9) | 10 | 61(h9) |
| 30 | 15 | 8.5 | PT1/8" | 50 | 32 | M5×0.8 | 6.5 | 34 | 32(H9) | 5 | 65(h9) | 10 | 67(h9) |
| 50 | 18 | 10.5 | PT1/8" | 63 | 38 | M5×0.8 | 10 | 38 | 35(H9) | 5.5 | 75(h9) | 12 | 77(h9) |

| Bore/Symbol | TA | U | UA | V | VA | W | WA | WB | X | XA | XB | Y | YA | YB | YC |
|---|---|---|---|---|---|---|---|---|---|---|---|---|---|---|---|
| 10 | 4.5 | 15(H9) | 3 | M5×0.8 | 8 | M5×0.8 | 8 | 32 | 3(H9) | 3.5 | 16 | 3(H9) | 3.5 | 56 | 40 |
| 20 | 6.5 | 17(H9) | 2.5 | M6×1.0 | 8 | M6×1.0 | 10 | 43 | 4(H9) | 4.5 | 21.5 | 4(H9) | 4.5 | 74 | 50 |
| 30 | 6.5 | 22(H9) | 3 | M6×1.0 | 8 | M6×1.0 | 10 | 48 | 4(H9) | 5 | 24 | 4(H9) | 4.5 | 80 | 58 |
| 50 | 7.5 | 26(H9) | 3 | M8×1.25 | 8 | M8×1.25 | 12 | 55 | 5(H9) | 6 | 27.5 | 5(H9) | 5.5 | 92 | 68 |

# Rotating Cylinder

## Dimension(mm):

MSQ70~200

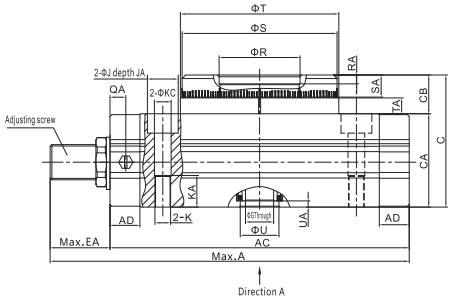


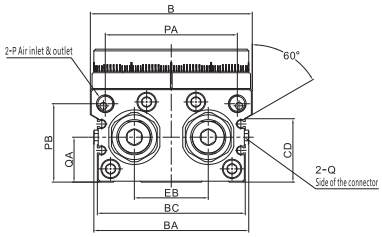


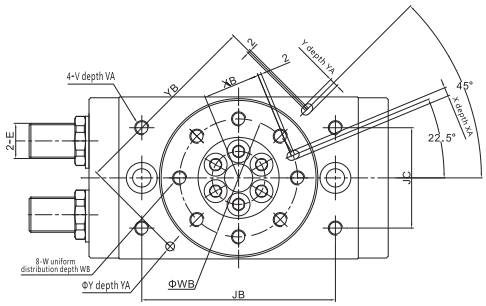


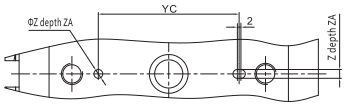


Direction A

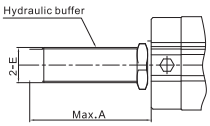


With Hydraulic buffer

| Bore/Symbol | A(Adjusting screw) | A(Hydraulic buffer) | AC | AD | B | BA | BC | C | CA | CB | CD |
|---|---|---|---|---|---|---|---|---|---|---|---|
| 70 | 204 | 238 | 170 | 17 | 92 | 88 | 84 | 75 | 53 | 22 | 36 |
| 100 | 223 | 257 | 189 | 17 | 102 | 99 | 95 | 86 | 59 | 27 | 42 |
| 200 | 276.5 | 314.5 | 240 | 24 | 120 | 117 | 113 | 106 | 74 | 32 | 57 |

| Bore/Symbol | E | EA(Adjusting screw) | EA(Hydraulic buffer) | EB | G | J | JA | JB | JC | K | KA | KC |
|---|---|---|---|---|---|---|---|---|---|---|---|---|
| 70 | M20×1.5 | 34 | 68 | 42 | 16 | 17.5 | 10.5 | 110 | 57 | M12×1.75 | 18 | 10.5 |
| 100 | M20×1.5 | 34 | 68 | 50 | 19 | 17.5 | 10.5 | 130 | 66 | M12×1.75 | 18 | 10.5 |
| 200 | M27×1.5 | 36.5 | 74.5 | 60 | 24 | 20 | 12.5 | 150 | 80 | M16×2.0 | 25 | 14 |

| Bore/Symbol | P | PA | PB | Q | QA | R | RA | S | SA | T | TA | U | V | VA |
|---|---|---|---|---|---|---|---|---|---|---|---|---|---|---|
| 70 | PT1/8" | 75 | 44.5 | M5×0.8 | 25.5 | 46(h9) | 5 | 88(h9) | 12.5 | 90(h9) | 9 | 22(H9) | M8×1.25 | 10 |
| 100 | PT1/8" | 85 | 50.5 | M5×0.8 | 29.5 | 56(h9) | 6 | 98(h9) | 14.5 | 100(h9) | 12 | 24(H9) | M8×1.25 | 10 |
| 200 | PT1/8" | 103 | 63 | M5×0.8 | 36.5 | 64(h9) | 9 | 116(h9) | 16.5 | 118(h9) | 15 | 32(H9) | M12×1.75 | 13 |

| Bore/Symbol | W | WA | WB | X | XA | XB | Y | YA | YB | YC | Z | ZA |
|---|---|---|---|---|---|---|---|---|---|---|---|---|
| 70 | M8×1.25 | 12.5 | 67 | 5(H9) | 5.5 | 33.5 | 5(H9) | 3.5 | 110 | 80 | 5(H9) | 3.5 |
| 100 | M8×1.25 | 14.5 | 77 | 6(H9) | 6.5 | 38.5 | 6(H9) | 4.5 | 120 | 100 | 6(H9) | 4.5 |
| 200 | M12×1.75 | 16.5 | 90 | 8(H9) | 8.5 | 45 | 8(H9) | 4.5 | 140 | 110 | 8(H9) | 6.5 |

# Angle Cylinder

## Specification:

| Type | 25 | 32 | 40 | 50 | 63 |
|---|---|---|---|---|---|
| Motion | Double acting | | | | |
| Fluid | Compressed air | | | | |
| Working Pressure (MPa) | 0.15~1 | | | | |
| Ambient temperature range (℃) | -20~80 | | | | |
| Speed range (mm/s) | 50~200 | | | | |
| Stroke tolerance range | $^{+1.0}_{0}$ | | | | |
| Rotation angle tolerance range ° | ±1.5 | | | | |
| Cushion type | No | | | | |
| Port size | M5×0.8 | 1/8" | | | |

## Symbol:

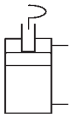

## How to order:

**ACK L 25 × 90**

- Specification
  - ACK: Angle Cylinder
  - ACKD: Angle Cylinder(Bilateral platen)
- Veer code
  - L: Press down and turn left
  - R: Press down and turn right
- Bore
  - 25
  - 32
  - 40
  - 50
  - 63
- Corner code
  - 90: 90°
  - 180: 180°

## Product feature:

ACK

1. The material of the seal ensures cylinder can be used in various conditions with reliable performance.
2. With three guiding grooves structure, it has high guiding precision.
3. Working ways: unilateral and bilateral(90° ).
4. Rotating ways: left and right; 90° and 180° .
5. The material of the piston rod is special alloy steal. After being heat treatment, it will have a long sevice life.

# Angle Cylinder

## Inner structure drawing:

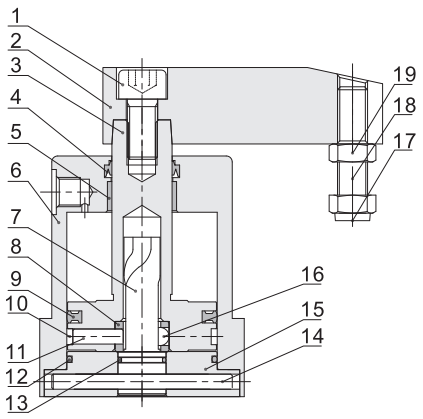


| Number | Name | Number | Name |
|---|---|---|---|
| 1 | Hexagon socket cap screws | 11 | Locating pin |
| 2 | Platen | 12 | O-ring |
| 3 | Piston rod | 13 | O-ring |
| 4 | Dustproof sealing ring | 14 | Cotter pin |
| 5 | Composite bearing | 15 | Rear cover |
| 6 | Cylinder barrel | 16 | Steel ball |
| 7 | Guide rod | 17 | Gasket |
| 8 | Guide rod seat | 18 | Bolt |
| 9 | Sealing ring | 19 | Hexagonal nut |
| 10 | Wearing ring | | |

## Dimension(mm):

ACK Series

■ Φ25~Φ63

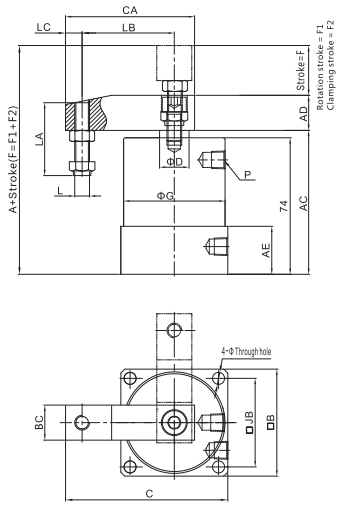


ACKD Series

■ Φ25~Φ63

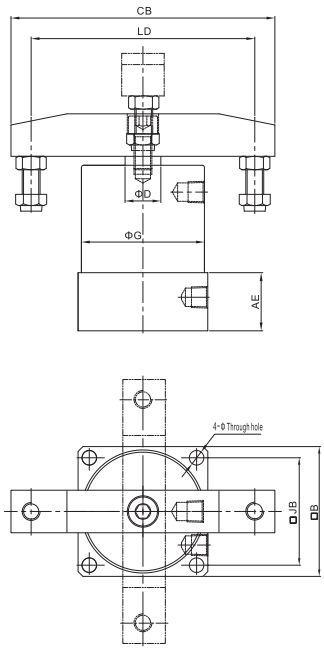


| Bore/Symbol | A | AC | AD | AE | B | BC | C | CA | CB | D | F(90°/180°) | F1(90°) |
|---|---|---|---|---|---|---|---|---|---|---|---|---|
| 25 | 85 | 65 | 16 | 23 | 40 | 16 | 58 | 48 | 76 | 14 | 26 | 14 |
| 32 | 95 | 73 | 19 | 23 | 54 | 19 | 86 | 70 | 118 | 16 | 26 | 14 |
| 40 | 97 | 74 | 19 | 26 | 58 | 19 | 88 | 70 | 118 | 16 | 27 | 15 |
| 50 | 109.5 | 80 | 25.5 | 26 | 68 | 25.5 | 114 | 93 | 160 | 20 | 29 | 15 |
| 63 | 115.5 | 86 | 25.5 | 30 | 82 | 25.5 | 121 | 93 | 160 | 20 | 29 | 15 |

| Bore/Symbol | F1(180°) | F2(90°) | F2(180°) | G | J | JB | L | LA | LB | LC | LD | P |
|---|---|---|---|---|---|---|---|---|---|---|---|---|
| 25 | 20 | 12 | 6 | 35 | 4.5 | 30 | M6×1.0 | 29.5 | 30 | 8 | 60 | M5×0.8 |
| 32 | 20 | 12 | 6 | 50 | 6.5 | 44 | M8×1.25 | 37.5 | 50 | 9 | 100 | PT1/8" |
| 40 | 21 | 12 | 6 | 55 | 6.5 | 48 | M8×1.25 | 37.5 | 50 | 9 | 100 | PT1/8" |
| 50 | 21 | 14 | 8 | 60 | 8.5 | 55 | M10×1.5 | 45 | 70 | 10 | 140 | PT1/8" |
| 63 | 21 | 14 | 8 | 70 | 8.5 | 64 | M10×1.5 | 45 | 70 | 10 | 140 | PT1/8" |

# Rotary Clamping Cylinder

| Type | 12 | 16 | 20 | 25 | 32 | 40 | 50 | 63 |
|---|---|---|---|---|---|---|---|---|
| Motion | Double acting | | | | | | | |
| Fluid | Compressed air | | | | | | | |
| Working Pressure (MPa) | 0.15~1 | | | | | | | |
| Ambient temperature range (℃) | -20~80 | | | | | | | |
| Speed range (mm/s) | 50~200 | | | | | | | |
| Rotation angle° | 90 ±10 | | | | | | | |
| Rotation direction | Left or right | | | | | | | |
| Rotation stroke(mm) | 7.5 | | 9.5 | | 15 | | 19 | |
| Clamping stroke(mm) | 10 20 | 10 20 30 | | | 10 20 30 50 | | | |
| Stroke tolerance range | $^{+1.0}_{0}$ | | | | | | | |
| Cushion type | Cushion sheet | | | | | | | |
| Port size | M5×0.8 | | | | 1/8" | | 1/4" | |

## Symbol:

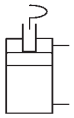

## Product feature:

1. With piston rod finished by QPR, the performance of surface welding slag resistance is better than the piston rod finished by chromate. It is adapt to welding surroundings.
2. The front cover with stainless steel dust scraping ring is sturdy and durable. It prevent cylinder from the damage of dust and splash slag and is more reli–able than dirt–proof boots.
3. Bores of Φ32 to Φ62 with powerful magnet are adapt to strong magnetic field work surroundings.
4. The installation dimensions and ways of this series are the same as CQ series so it can use the installing accessories of CQ series.

## How to order:

**MK L 32×20 S FB**

- Specification: QCK: Rotary Clamping Cylinder
- Veer code: L: Press down and turn left; R: Press down and turn right
- Bore: 12, 16, 20, 25, 32, 40, 50, 63
- Clamping stroke

| Bore | Clamping stroke |
|---|---|
| Φ12 | 10、20 |
| Φ12~Φ25 | 10、20、30 |
| Φ32~63 | 10、20、30、50 |

- Magnet code: S: with magnet
- Mounting type: Blank: No mouting accessories; FB: Rear flange connecting plate

## Inner structure drawing:

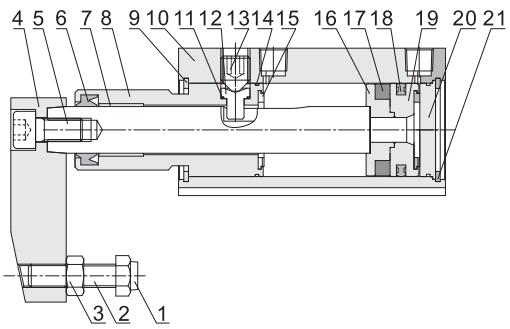


| Number | Name | Number | Name |
|---|---|---|---|
| 1 | Gasket | 12 | Rotating block |
| 2 | Bolt | 13 | Hexagon socket set screws |
| 3 | Hexagonal nut | 14 | O-ring |
| 4 | Platen | 15 | Fenders |
| 5 | Piston rod | 16 | Magnet seat |
| 6 | Dustproof sealing ring | 17 | Magnet |
| 7 | Composite bearing | 18 | O-ring |
| 8 | Front cover | 19 | Piston |
| 9 | Retaining ring for hole | 20 | Rear cover |
| 10 | Cylinder barrel | 21 | Circlip for hole |
| 11 | O-ring | | |

# Rotary Clamping Cylinder

## Dimension(mm):

MK Series

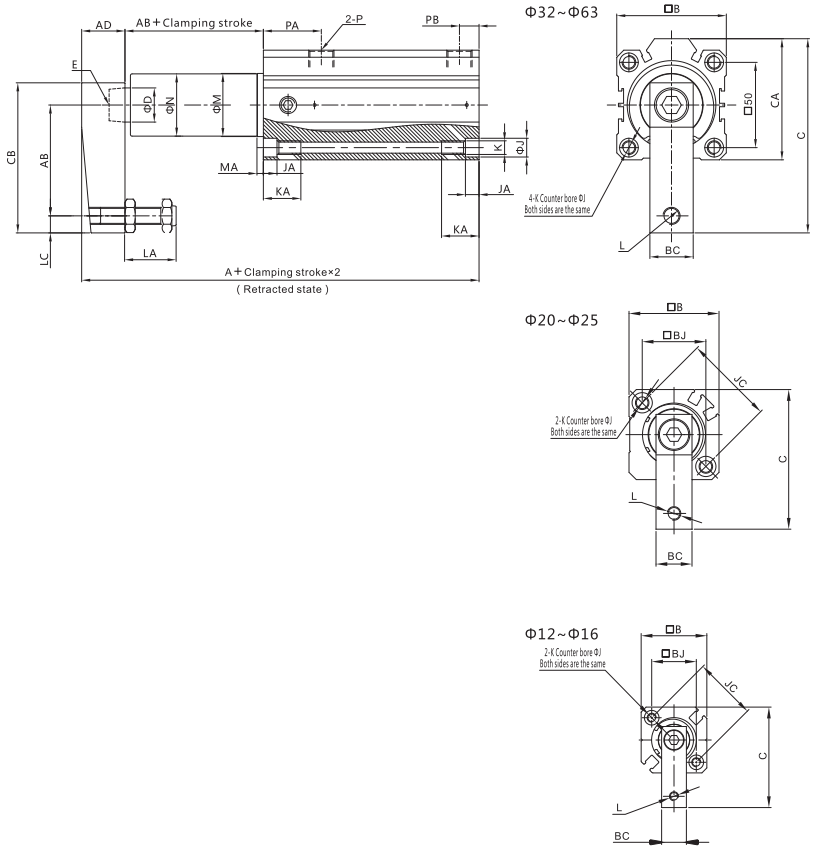


| Bore/Symbol | A | AB | AC | AD | B | BC | C | CA | CB | D | E | G | J | JA | JB | JC |
|---|---|---|---|---|---|---|---|---|---|---|---|---|---|---|---|---|
| 12 | 55 | 10.5 | 35.5 | 9 | 25 | 9 | 36.5 | - | 29 | 6 | M3×0.5 | 3.3 | 6.5 | 3.5 | 15.5 | 22 |
| 16 | 59 | 10.5 | 35.5 | 13 | 29 | 11 | 44.5 | - | 36 | 8 | M5×0.8 | 3.3 | 6.5 | 3.5 | 20 | 28 |
| 20 | 86 | 8 | 62 | 16 | 36 | 16 | 60 | - | 51 | 12 | M8×1.25 | 5 | 9 | 7 | 25.5 | 36 |
| 25 | 87 | 8 | 63 | 16 | 40 | 16 | 62 | - | 51 | 12 | M8×1.25 | 5 | 9 | 7 | 28 | 40 |
| 32 | 108 | 17.5 | 71.5 | 19 | 45 | 19 | 82 | 49.5 | 67 | 16 | M10×1.5 | 5 | 9 | 7 | 34 | - |
| 40 | 109 | 25 | 65 | 19 | 53 | 19 | 85.5 | 57 | 67 | 16 | M10×1.5 | 5 | 9 | 7 | 40 | - |
| 50 | 133 | 31 | 76.5 | 25.5 | 64 | 25.5 | 114 | 71 | 88 | 20 | M12×1.75 | 6.5 | 11 | 8 | 50 | - |
| 63 | 136 | 30.5 | 80 | 25.5 | 77 | 25.5 | 120.5 | 84 | 88 | 20 | M12×1.75 | 8.5 | 14 | 10.5 | 60 | - |

| Bore/Symbol | K | KA | L | LA | LB | LC | M | MA | N | E | PA | PB |
|---|---|---|---|---|---|---|---|---|---|---|---|---|
| 12 | M4×0.7 | 11 | M4×0.7 | 7~13 | 20 | 4 | 11 | 3 | 10.8 | M5×0.8 | 13.5 | 5.5 |
| 16 | M4×0.7 | 11 | M4×0.7 | 7~13 | 25 | 5 | 14 | 3 | 13.8 | M5×0.8 | 15 | 5.5 |
| 20 | M6×1.0 | 17 | M6×1.0 | 9.5~20.5 | 35 | 7 | 18 | 3 | 17.8 | M5×0.8 | 30 | 6 |
| 25 | M6×1.0 | 17 | M6×1.0 | 9.5~20.5 | 35 | 7 | 23 | 6 | 22.5 | M5×0.8 | 30 | 7 |
| 32 | M6×1.0 | 17 | M8×1.25 | 13.5~25.5 | 45 | 10 | 30 | 7 | 29.5 | PT1/8 | 34.5 | 8.5 |
| 40 | M6×1.0 | 17 | M8×1.25 | 13.5~25.5 | 45 | 10 | 30 | 3 | 29.5 | PT1/8 | 26.5 | 9 |
| 50 | M8×1.25 | 22 | M10×1.5 | 14.5~30 | 65 | 10 | 37 | 3.5 | 36.5 | PT1/4 | 34 | 11.5 |
| 63 | M10×1.5 | 28.5 | M10×1.5 | 14.5~30 | 65 | 10 | 48 | 3.5 | 47.5 | PT1/4 | 34.5 | 11.5 |

# Parallel Open and Close Type

## Specification:

| Type | | 6 | 10 | 16 | 20 | 25 | 32 | 40 |
|---|---|---|---|---|---|---|---|---|
| Fluid | | Compressed air | | | | | | |
| Working pressure (Mpa) | Single acting | 0.15~0.7 | 0.2~0.7 | 0.1~0.7 | | | | |
| | Double acting | 0.3~0.7 | 0.35~0.7 | 0.25~0.7 | | | | |
| Ambient and fluid temperature(℃) | | -10~60 | | | | | | |
| Repeated precision (mm) | | ±0.01 | | | | | ±0.02 | |
| Maximum frequency of use (c.p.m) | | 180(MHZL2 series 120) | | | | | 60 | |
| Oil feeding | | Not required | | | | | | |
| Acting way | | Double acting · Single acting | | | | | | |
| Magnetic switch (optional) | | Non-contact magnetic switch (MHZA2 without magnetic switch) | | | | | | |
| Port size | | M3×0.5 | | M5×0.8 | | | | |

## Symbol:

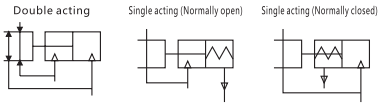

MHZ□

## Product feature:

1. Adopt the integrated design of linear guideway with high rigidity and pricision.
2. Positioning pin is at the bottom of the linear guideway to prevent positional pin deviating from the body.
3. The body attaches fixed benchmark centering hole to improve the fixed–precision and repeating disassembling positioning consistency.
4. According to customers' actual using requirement, the original position of the clamping jaw can be customized to meet the different needs of different operating conditions.

## How to order:

**MHZ□ 16 D □ □ □ M9B □**

- **Type**
  - Blank: Standard type
  - A: Small type
  - L: Long stroke type
  - J: With dust cover type
- **Bore**
  - Φ6: 6mm
  - Φ10: 10mm
  - Φ16: 16mm
  - Φ20: 20mm
  - Φ25: 25mm
  - Φ32: 32mm
  - Φ40: 40mm
- **Motion**
  - D: Double acting
  - S: Single acting (Normally open)
  - C: Single acting (Normally closed)
- **Optional gripper**
  - Blank: Standard type
  - 1: Side screw hole mounting
  - 2: Open and close direction through-hole mounting type
  - 3: Flat gripper type
- **The type of claw is optional**
  - Blank: Standard type
  - M: Terminal block type Axial M5 through hole (single acting)
  - E: Terminal block type side piping (double acting / single acting)
  - H: Terminal block type With Φ4 Axial through hole of hose connector (single acting)
- **Cylinder color**
  - Blank: Hard oxygen natural color
  - A: Hard oxygen black
  - B: Hard oxygen gold
  - C: Hard oxygen pink
  - D: Please contact the sales person for special colors.
- **Magnetic switch model**
  - Blank: No magnetic switch
  - ZA：No magnetic switch
- **Number of magnetic switches**
  - Blank: 2
  - S : 1

# Parallel Open and Close Type

## Dimension(mm):

### MHZ2-6

Double acting/Single acting
Standard Type

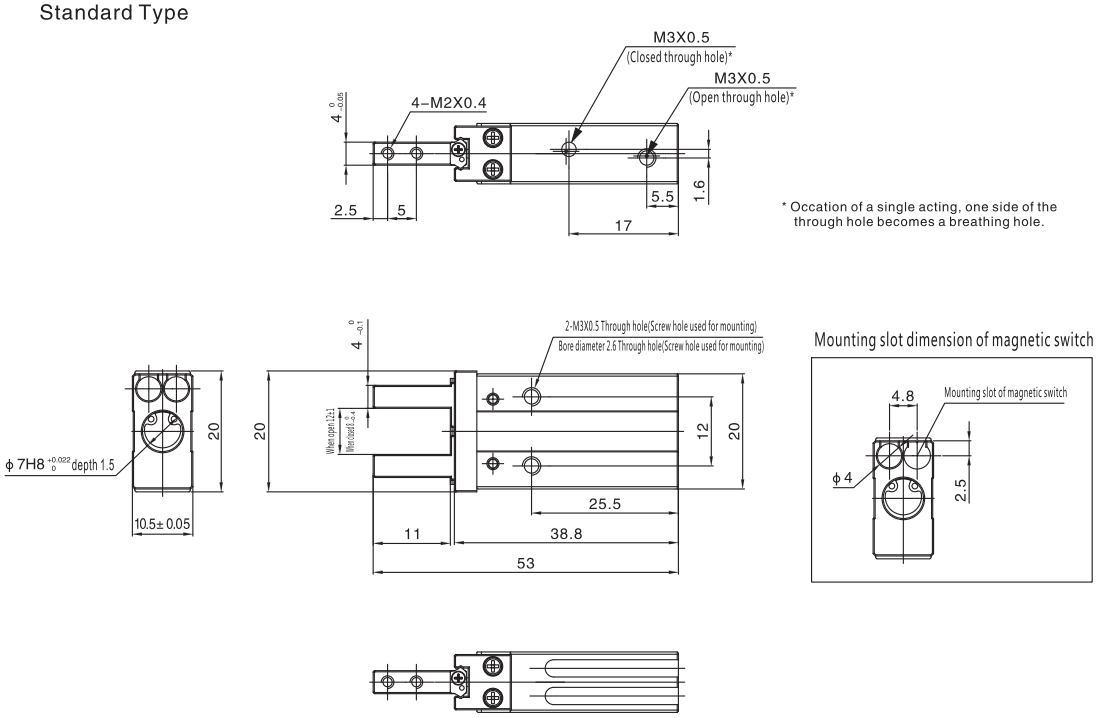

MHZ□

# Parallel Open and Close Type

## Dimension(mm):

### MHZ–□□

Double acting/Single acting
Standard Type

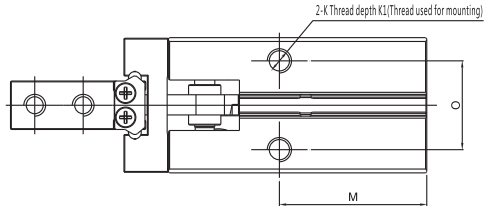


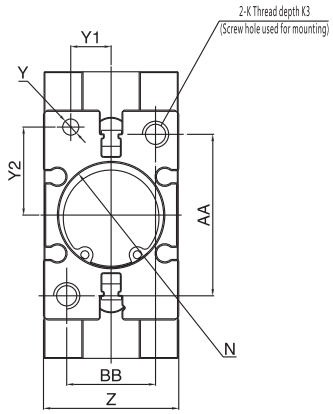


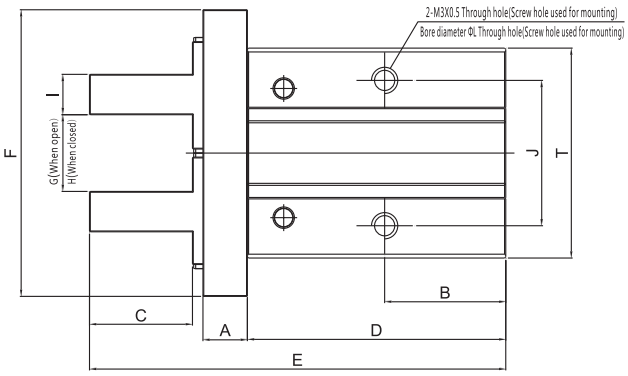


Mounting slot dimension of magnetic switch

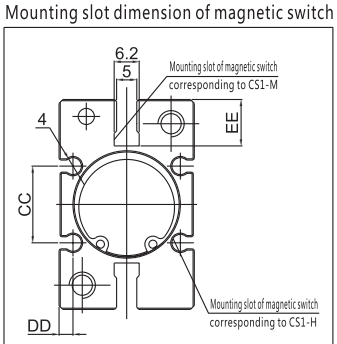


Note: When the magnetic switch CS1-M is used, it can not be through-hole installed.

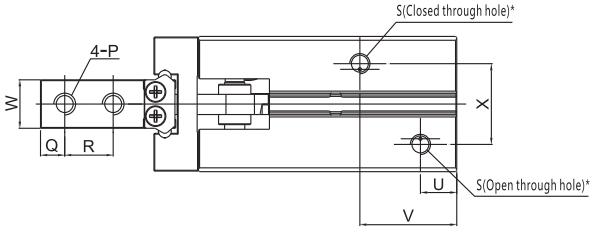


* Occation of a single acting, one side of the through hole becomes a breathing hole.

| Bore | A | B | C | D | E | F | G | H | I | J | K | K1 | K2 | K3 | ϕL | M | N | O | P | Q | R | S | T | U |
|---|---|---|---|---|---|---|---|---|---|---|---|---|---|---|---|---|---|---|---|---|---|---|---|---|
| 10 | 6 | 23 | 12 | 37.8 | 57 | 29 | $15.2^{+0.2}_{0}$ | $11.2^{0}_{-0.7}$ | $4^{0}_{-0.1}$ | 16 | M3X0.5 | 6 | 5.5 | 6 | 2.6 | 27 | ϕ 11H9 $^{+0.043}_{0}$ depth 2 | 11.4 | M2.5X0.45 | 3 | 5.7 | M3X0.5 | 23 | 9 |
| 16 | 7.5 | 24.5 | 15 | 42.5 | 67.3 | 38 | $20.9^{+0.2}_{-0.2}$ | $14.9^{0}_{-0.7}$ | $5^{0}_{-0.1}$ | 24 | M4X0.7 | 4.5 | 8 | 8 | 3.4 | 30 | ϕ 17H9 $^{+0.043}_{0}$ depth 2 | 16 | M3X0.5 | 4 | 7 | M5X0.8 | 30.6 | 7.5 |
| 20 | 9.5 | 29 | 20 | 52.8 | 84.8 | 50 | $26.3^{+0.2}_{-0.2}$ | $16.3^{0}_{-0.7}$ | $8^{0}_{-0.1}$ | 30 | M5X0.8 | 8 | 10 | 10 | 4.3 | 35 | ϕ 21H9 $^{+0.052}_{0}$ depth 3 | 18.6 | M4X0.7 | 5 | 9 | M5X0.8 | 42 | 10 |
| 25 | 11 | 30 | 25 | 63.6 | 102.7 | 63 | $33.3^{+0.5}_{-0.2}$ | $19.3^{0}_{-0.8}$ | $10^{0}_{-0.1}$ | 36 | M6X1 | 10 | 12 | 12 | 5.1 | 36.5 | ϕ 26H9 $^{+0.052}_{0}$ depth 3.5 | 22 | M5X0.8 | 6 | 12 | M5X0.8 | 52 | 10.7 |
| 32 | 12 | 40(49) | 29 | 67(76) | 113(122) | 97 | $48^{+0.5}_{0}$ | $26^{0}_{-0.5}$ | $12^{0}_{-0.1}$ | 46 | M6X1 | 10 | 13 | 13 | 5.1 | 48(57) | ϕ 34H9 $^{+0.062}_{0}$ depth 4 | 26 | M6X1 | 7 | 14 | M5X0.8 | 60 | 11 |
| 40 | 15 | 49(62) | 36 | 83(96) | 139(152) | 119 | $60^{+0.7}_{0}$ | $30^{0}_{-0.5}$ | $14^{0}_{-0.1}$ | 56 | M8X1.25 | 13 | 16 | 17 | 6.6 | 58(71) | ϕ 42H9 $^{+0.062}_{0}$ depth 4 | 32 | M8X1.25 | 9 | 17 | M5X0.8 | 72 | 12 |

| Bore | V | W | X | Y | Y1 | Y2 | Z | AA | BB | CC | DD | EE |
|---|---|---|---|---|---|---|---|---|---|---|---|---|
| 10 | 19 | $5^{0}_{-0.05}$ | 11 | ϕ 2H9 $^{+0.025}_{0}$ depth 3 | 5.2 ± 0.02 | 7.6 ± 0.02 | 16.4 ± 0.05 | 18 | 12 | | | 5.4 |
| 16 | 19 | $8^{0}_{-0.05}$ | 13 | ϕ 3H9 $^{+0.025}_{0}$ depth 3 | 6.5 ± 0.02 | 11 ± 0.02 | 23.6 ± 0.05 | 22 | 15 | 11.6 | 2.1 | 5.8 |
| 20 | 23 | $10^{0}_{-0.05}$ | 15 | ϕ 4H9 $^{+0.03}_{0}$ depth 4 | 7.5 ± 0.02 | 16.8 ± 0.02 | 27.6 ± 0.05 | 32 | 18 | 14 | 2.1 | 9 |
| 25 | 23.5 | $12^{0}_{-0.05}$ | 20 | ϕ 4H9 $^{+0.03}_{0}$ depth 4 | 10 ± 0.02 | 21.8 ± 0.02 | 33.6 ± 0.05 | 40 | 22 | 19 | 3.5 | 11.5 |
| 32 | 31(37) | $15^{0}_{-0.05}$ | 24 | ϕ 5H9 $^{+0.03}_{0}$ depth 5 | 12 ± 0.02 | 23 ± 0.02 | 40 ± 0.1 | 46 | 26 | 24 | 3.3 | 11.5 |
| 40 | 38(45) | $18^{0}_{-0.05}$ | 28 | ϕ 5H9 $^{+0.03}_{0}$ depth 5 | 14 ± 0.02 | 29 ± 0.02 | 48 ± 0.1 | 56 | 32 | 29.4 | 3.7 | 13 |

Note): When the dimension inside the brackets is single acting.

# Parallel Open and Close Type

## Dimension(mm):

### MHZJ-6□

Double acting/Single acting
Standard Type

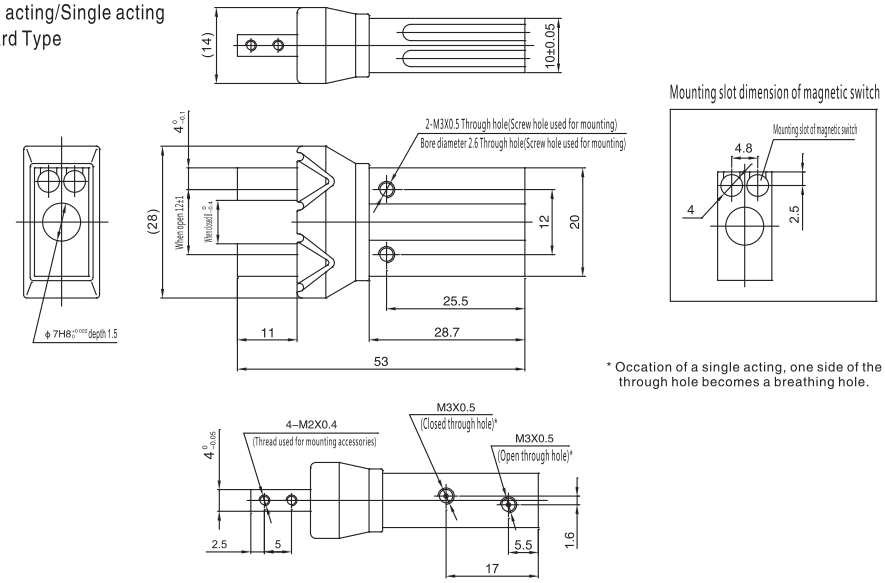


* Occation of a single acting, one side of the through hole becomes a breathing hole.

### MHZJ-□□

Double acting/Single acting
Standard Type

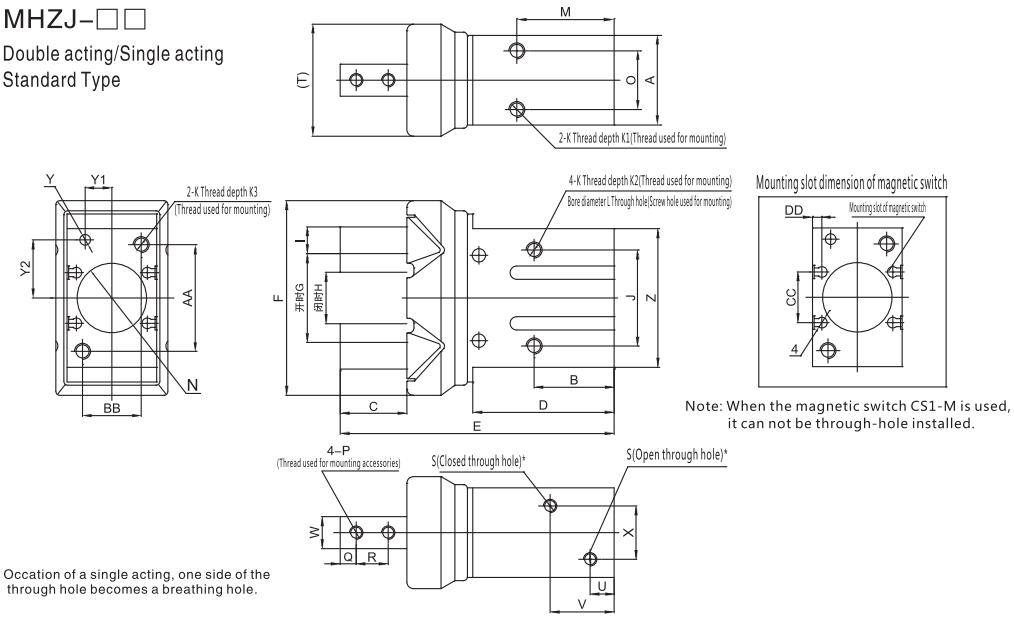


Note: When the magnetic switch CS1-M is used, it can not be through-hole installed.

* Occation of a single acting, one side of the through hole becomes a breathing hole.

| Bore | A | B | C | D | E | F | G | H | I | J | K | K1 | K2 | K3 | ΦL | M | N |
|---|---|---|---|---|---|---|---|---|---|---|---|---|---|---|---|---|---|
| 10 | 16.4 ± 0.05 | 23 | 12 | 31 | 57 | 34 | $15.2^{+2.2}_{0}$ | $11.2^{0}_{-0.7}$ | $4^{0}_{-0.1}$ | 16 | M3X0.5 | 6 | 5.5 | 6 | 2.6 | 27 | $\Phi 11H9^{+0.043}_{0}$ depth 2 |
| 16 | 23.6 ± 0.05 | 24.5 | 15 | 34.8 | 67.3 | 45 | $20.9^{+2.2}_{0}$ | $14.7^{0}_{-0.7}$ | $5^{0}_{-0.1}$ | 24 | M4X0.7 | 4.5 | 8 | 8 | 3.4 | 30 | $\Phi 17H9^{+0.043}_{0}$ depth 2 |
| 20 | 27.6 ± 0.05 | 29 | 20 | 43.5 | 84.8 | 58 | $26.3^{+2.2}_{0}$ | $16.3^{0}_{-0.7}$ | $8^{0}_{-0.1}$ | 30 | M5X0.8 | 8 | 10 | 10 | 4.3 | 35 | $\Phi 21H9^{+0.052}_{0}$ depth 3 |
| 25 | 33.6 ± 0.05 | 30 | 25 | 53 | 102.7 | 73 | $33.3^{+2.5}_{0}$ | $19.3^{0}_{-0.8}$ | $10^{0}_{-0.1}$ | 36 | M6X1 | 10 | 12 | 12 | 5.1 | 36.5 | $\Phi 26H9^{+0.052}_{0}$ depth 3.5 |

| Bore | O | P | Q | R | S | T | U | V | W | X | Y | Y1 | Y2 | Z | AA | BB | CC | DD |
|---|---|---|---|---|---|---|---|---|---|---|---|---|---|---|---|---|---|---|
| 10 | 11.4 | M2.5X0.45 | 3 | 5.7 | M3X0.5 | 21 | 7 | 19 | $5^{0}_{-0.05}$ | 11 | $\Phi 2H9^{+0.025}_{0}$ depth 3 | 5.2 ± 0.02 | 7.6 ± 0.02 | 23 | 18 | 12 | 18 | 8.2 |
| 16 | 16 | M3X0.5 | 4 | 7 | M5X0.8 | 29.6 | 7.5 | 19 | $8^{0}_{-0.05}$ | 13 | $\Phi 3H9^{+0.025}_{0}$ depth 3 | 6.5 ± 0.02 | 11 ± 0.02 | 30.6 | 22 | 15 | 11.6 | 2.1 |
| 20 | 18.6 | M4X0.7 | 5 | 9 | M5X0.8 | 34.5 | 8.5 | 23 | $10^{0}_{-0.05}$ | 15 | $\Phi 4H9^{+0.03}_{0}$ depth 4 | 7.5 ± 0.02 | 16.8 ± 0.02 | 42 | 32 | 18 | 14 | 2.1 |
| 25 | 22 | M5X0.8 | 6 | 12 | M5X0.8 | 42 | 9 | 24 | $12^{0}_{-0.05}$ | 20 | $\Phi 4H9^{+0.03}_{0}$ depth 4 | 10 ± 0.02 | 21.8 ± 0.02 | 52 | 40 | 22 | 19 | 3.5 |

# Pivot Open and Close Type

## Specification:

| Type | | 6 | 10 | 16 | 20 | 25 |
|---|---|---|---|---|---|---|
| Fluid | | Compressed air | | | | |
| Operating pressure range(Mpa) | Single acting | 0.3~0.6 | 0.25~0.6 | | | |
| | Double acting | 0.15~0.6 | 0.1~0.6 | | | |
| Ambient and fluid temperature(℃) | | -10~60 | | | | |
| Repeated precision (mm) | | ±0.02 | ±0.01 | | | |
| Maximum frequency of use (c.p.m) | | 180 | | | | |
| Oil feeding | | Not required | | | | |

## How to order:

**MHC□ 20 D Y59A S**

- Type
  - Blank: Standard Type
  - Pivot Open and Close Type
- Bore
  - Φ10: 10mm
  - Φ16: 16mm
  - Φ20: 20mm
  - Φ25: 25mm
- Motion
  - D: Double acting
  - S: Single acting (Normally open)
- Magnetic switch model
  - Blank: No magnetic switch(Built-in magnet ring)
- Number of magnetic switches
  - Blank: 2
  - S : 1

## Symbol:

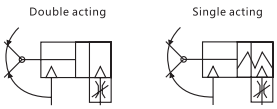

MHC□

## Product feature:

1. Adopt single piston structure with big clamping torque.
2. It comes with variable throttle valve to adjust the opening and closing speed of the clamping jaw conveniently.
3. Reasonable clamping angle makes the actual using range wide.
4. Accurate positioning precision makes picking up the workpieces more accurate and reliable.
5. Various forms of installation are convenient for the use of different occasions.
6. All series attached with magnet are convenient for control.

## Dimension(mm):

### MHC–6

Double acting Φ6~Φ25

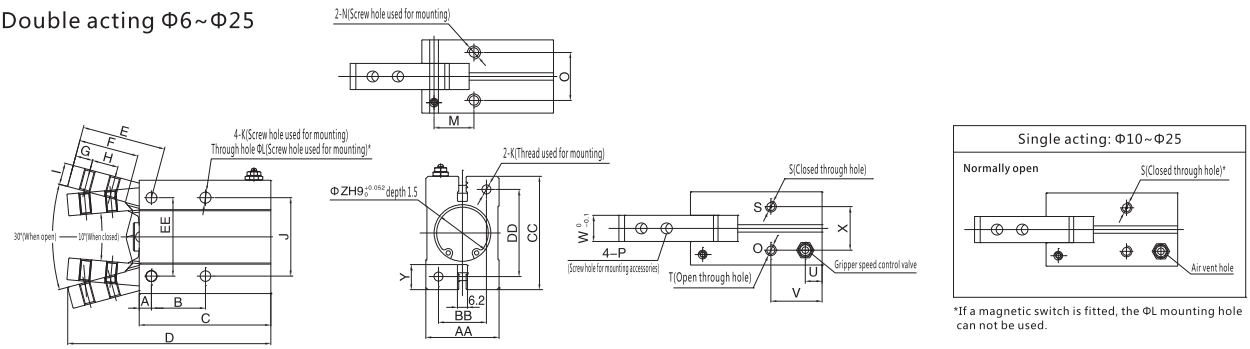


*If a magnetic switch is fitted, the ΦL mounting hole can not be used.

| Bore (mm) | A | B | C | D | E | F | G | H | I | J | K | L | M | N | O | P | port size S | port size T | U | V | W | X | Y | Z | AA | BB | CC | DD | EE |
|---|---|---|---|---|---|---|---|---|---|---|---|---|---|---|---|---|---|---|---|---|---|---|---|---|---|---|---|---|---|
| 6 | 4 | 6 | 29 | 41 | 16 | 11 | 2.5 | 5 | 2 | 12 | M3X0.5 Through hole | 2.6 | – | M2X0.4 depth 4 | 5 | M2X0.4 | M3X0.5 | | – | – | 4 | 2.1 | – | 7 | 10 | 4 | 20 | 13.6 | 14 |
| 10 | 2.8 | 12.8 | 38.6 | 52.4 | 17.2 | 12 | 3 | 5.7 | 4 | 16 | M3X0.5 depth 5 | 2.6 | 8.8 | M3X0.5 depth 6 | 11.4 | M2.5X0.45 | M3X0.5 | | 7.2 | 18.8 | 6.4 | 10.4 | 5.4 | 11 | 16.4 | 12 | 23 | 18 | 10 |
| 16 | 3.9 | 16.2 | 44.6 | 62.5 | 22.6 | 16 | 4 | 7 | 7 | 24 | M4X0.7 depth 8 | 3.4 | 10.7 | M4X0.7 depth 8 | 16 | M3X0.5 | M5X0.8 | | 7 | 18.3 | 8 | 13 | 5.8 | 17 | 23.6 | 15 | 30.6 | 22 | 16 |
| 20 | 4.5 | 21.7 | 55.2 | 78.7 | 28 | 20 | 5.2 | 9 | 8 | 30 | M5X0.8 depth 10 | 4.3 | 15.7 | M5X0.8 depth 8 | 18.6 | M4X0.7 | M5X0.8 | | 7.5 | 22.2 | 10 | 15 | 9 | 21 | 27.6 | 18 | 42 | 32 | 20 |
| 25 | 4.6 | 25.8 | 60.4 | 92 | 37.5 | 27 | 8 | 12 | 10 | 36 | M6X1 depth 12 | 5.1 | 19.3 | M6X1 depth 10 | 22 | M5X0.8 | M5X0.8 | | 7.7 | 23.5 | 12 | 20 | 11.5 | 26 | 33.6 | 22 | 52 | 40 | 25 |

## Pivot Open and Close Type

### Dimension(mm):

#### MHCA-6

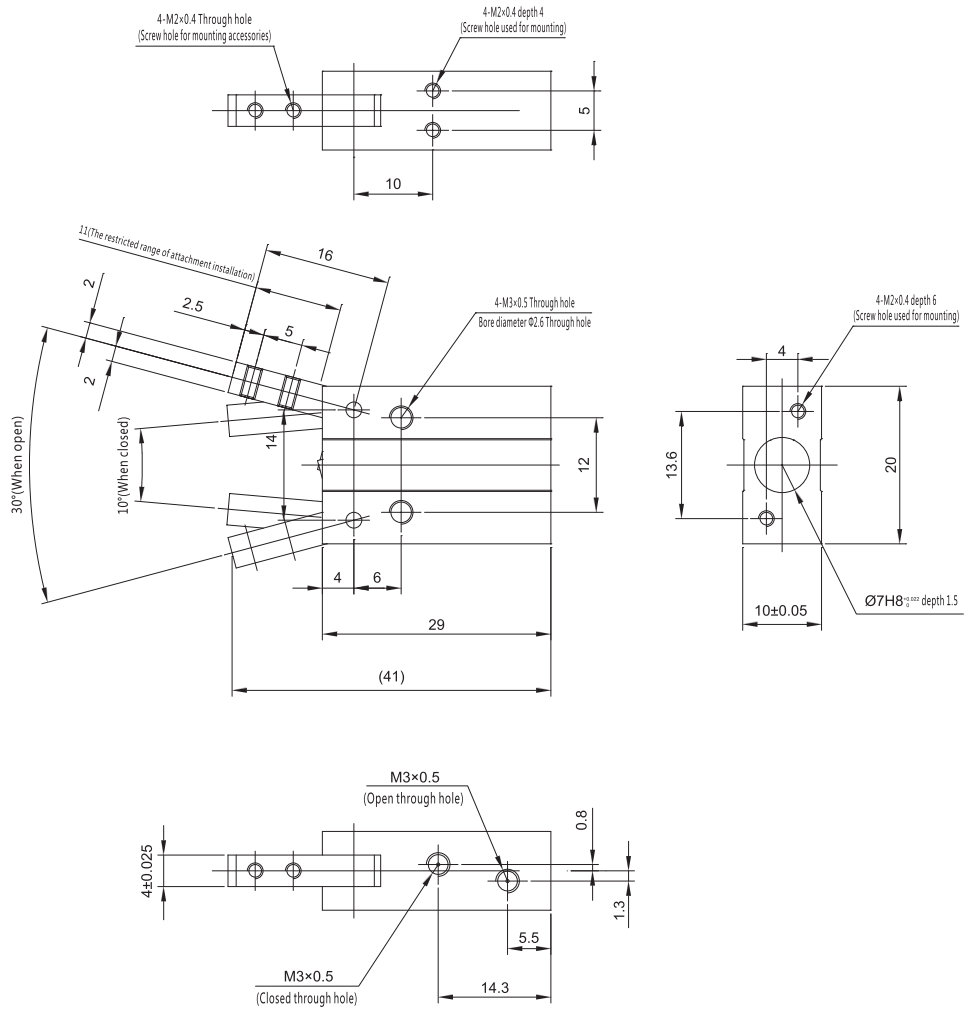

MHC□

# Pivot Open and Close Type/ Cam Type 180° Open and Close

## Specification:

| Type | MHY-10D | MHY-16D | MHY-20D | MHY-25D |
|---|---|---|---|---|
| Fluid | Compressed Air | | | |
| Motion | Double acting | | | |
| Maximum working pressure(Mpa) | 0.6 | | | |
| Minimum working pressure(Mpa) | 0.1 | | | |
| Ambient and fluid temperature(℃) | -10~60 | | | |
| Repeated precision (mm) | ±0.2 | | | |
| Maximum frequency of use (c.p.m) | 60 | | | |
| Clamping torque(Nm) | 0.16 | 0.54 | 1.10 | 2.28 |
| Oil feeding | Not required | | | |
| Port size | M5×0.8 | | | |

## Symbol:

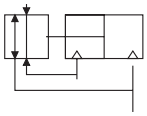

## Product Feature:

1. With magnetic ring inside, it can install magnetic switch.
2. 180° open and close type simplifies the pick–and –place action.
3. It can be used in special environment. The open and close part of the fingers are specially designed to prevent small objects from getting in.
4. It is easy for installation with dowel holes.

## How to order:

**MHY 16 D 2 M9NL □**

- **Type**
  - Blank: Standard Type
  - Pivot Open and Close Type
- **Bore**
  - Φ10: 10mm
  - Φ16: 16mm
  - Φ20: 20mm
  - Φ25: 25mm
- **Motion**
  - D: Double acting
- **Gripper installing form**
  - Blank: Screw hole mounting (standard)
  - 2. Through-hole installation on open and close direction
- **Magnetic switch model**
  - Blank: No magnetic switch
  - M9N(V)
  - M9B(V)
  - The specifications and characteristics of magnetic switch refer to the magnetic switch series.
- **Number of magnetic switches**
  - Blank: 2
  - S : 1

## Inner structure drawing:

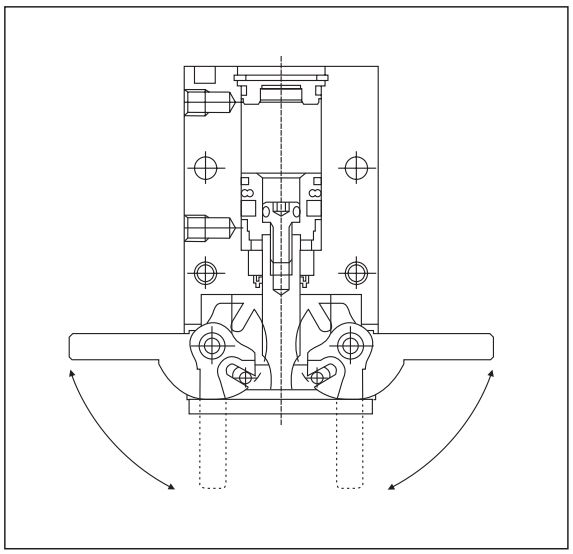

# Pivot Open and Close Type/ Cam Type 180° Open and Close

## Dimension(mm):

### MHY-10D

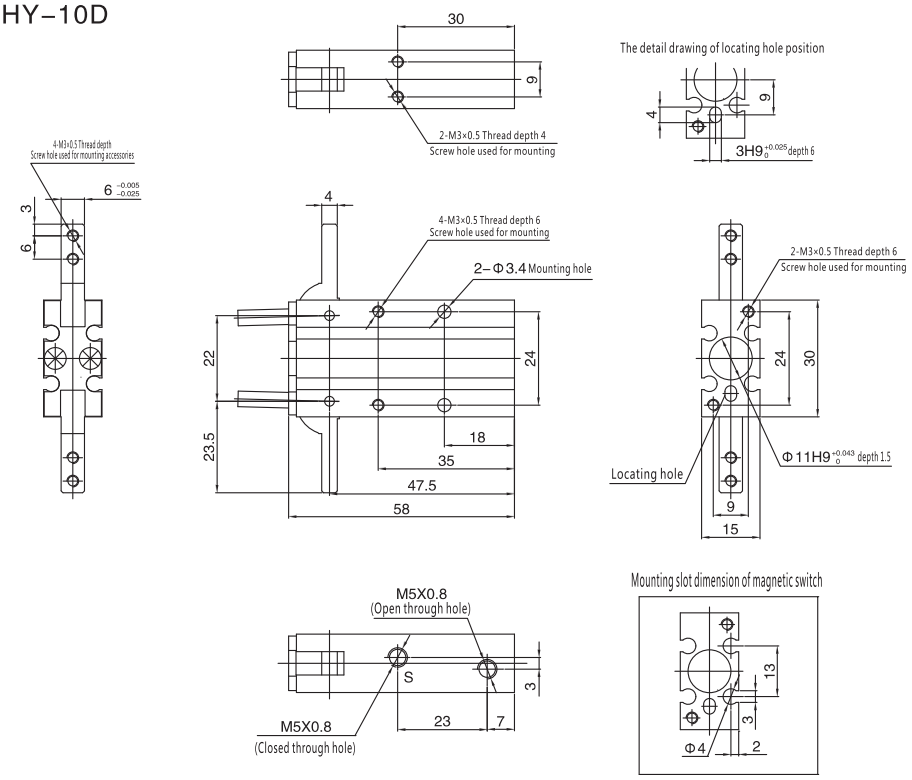


### MHY-16D

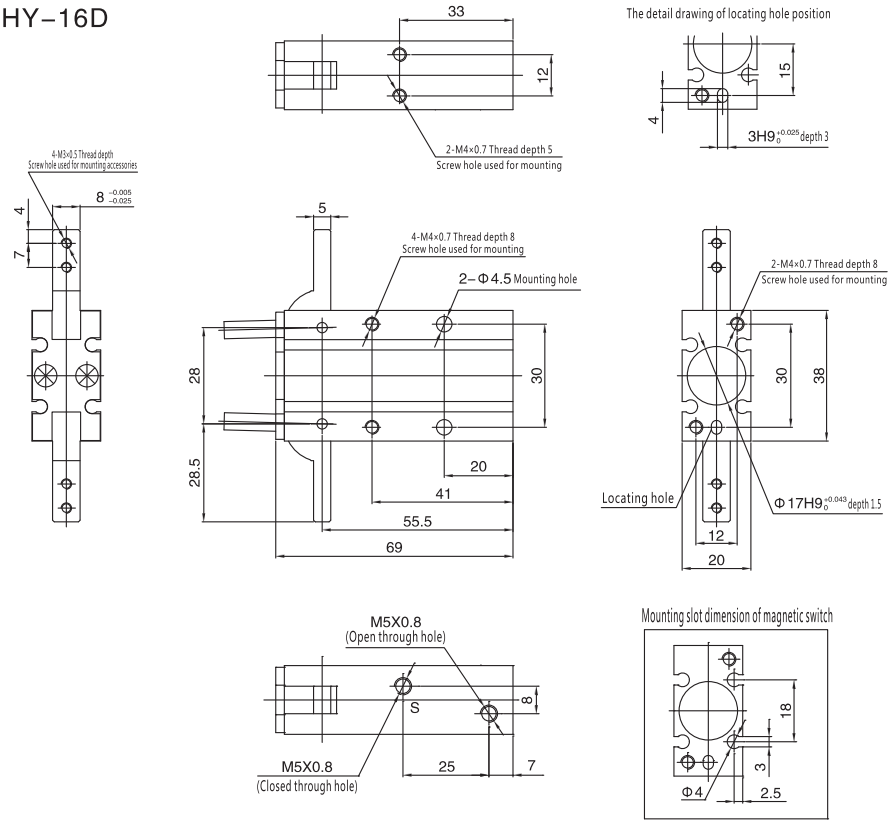

# Pivot Open and Close Type/ Cam Type 180° Open and Close

## Dimension(mm):

### MHY-20D

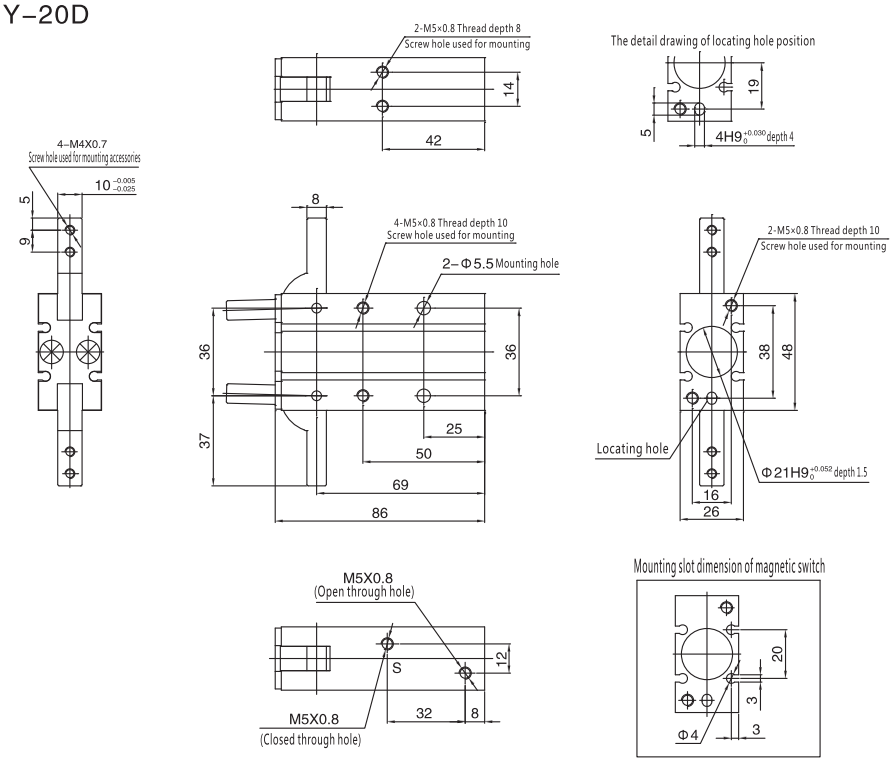


### MHY-25D

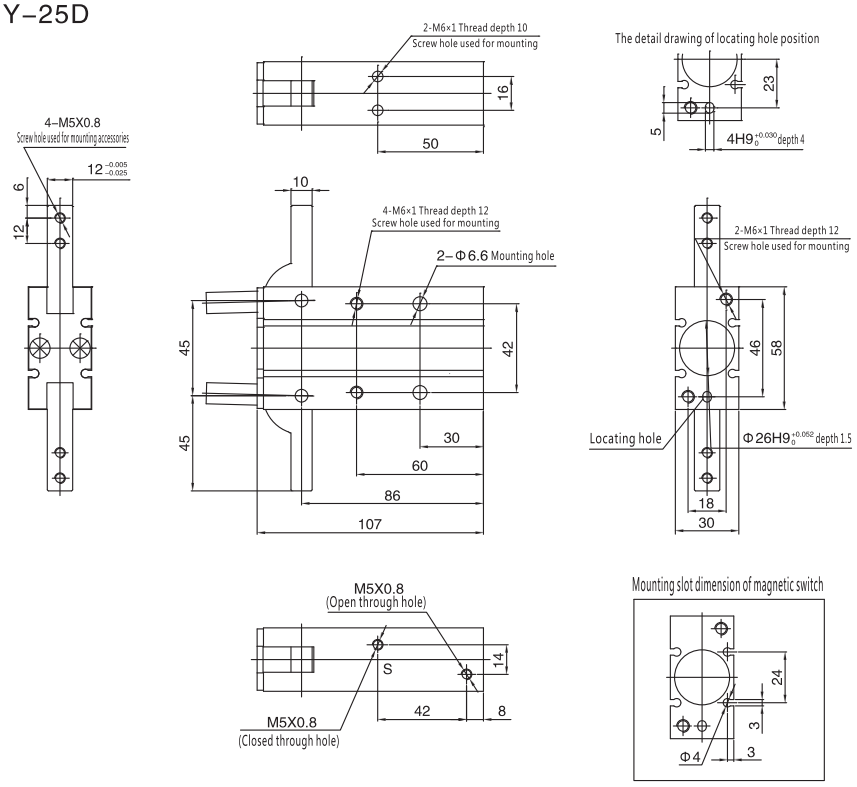

# Parallel Open and Close Type

## Specification:

| Type | 10 | 16 | 20 | 25 | 32 | 40 |
|---|---|---|---|---|---|---|
| Fluid | Compressed air (No oil feeding) | | | | | |
| Motion | Double acting | | | | | |
| Maximum working pressure(Mpa) | 0.6 | | | | | |
| Minimum working pressure(Mpa) | 0.15 | 0.1 | | | | |
| Ambient and fluid temperature(℃) | -10~60 | | | | | |
| Repeated precision (mm) | ±0.1 | | | | | |
| Clamping torque(Nm) | 14 | 45 | 74 | 131 | 228 | 396 |
| Port size | M5×0.8 | | | | Rc1/8 | |

## Symbol:

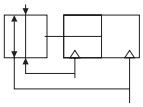

## How to order:

**MHL 16 D 1 Y59A □**

- Type: Blank: Standard Type; Parallel Open and Close Type
- Bore: Φ10: 10mm; Φ16: 16mm; Φ20: 20mm; Φ25: 25mm; Φ32: 32mm; Φ40: 40mm
- Motion: D: Double acting
- Gripper open and closed stroke

| bore | Φ10 | Φ16 | Φ20 | Φ25 | Φ32 | Φ40 |
|---|---|---|---|---|---|---|
| Blank | 20 | 30 | 40 | 50 | 70 | 100 |
| 1 | 40 | 60 | 80 | 100 | 120 | 160 |
| 2 | 60 | 80 | 100 | 120 | 160 | 200 |

- Magnetic switch model: Blank: No magnetic switch
- Number of magnetic switches: Blank: 2; S : 1

## Product feature:

1. The stroke of fingers are long enough to clamp bulky items.
2. Two pistons design can increase the retentivity.
3. Pinion and rack operation can make fingers open and close at the same time.
4. Adopt dustproof design with special seals.

MHL

## Stroke table

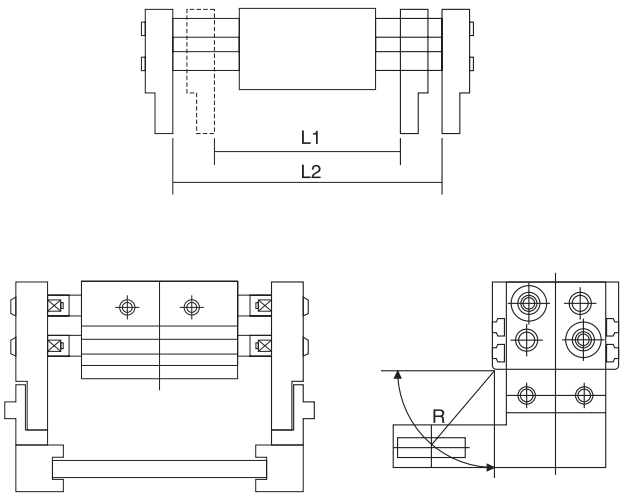


R:Clamping point distance(mm)

| Type | Bore (mm) | Maximum acting frequency c.p.m | Open and closed stroke mm (L2–L1) | Open width mm (L1) | Closed width mm (L2) |
|---|---|---|---|---|---|
| MHL-10D | 10 | 60 | 20 | 56 | 76 |
| MHL-10D1 | | 40 | 40 | 78 | 118 |
| MHL-10D2 | | | 60 | 96 | 156 |
| MHL-16D | 16 | 60 | 30 | 68 | 98 |
| MHL-16D1 | | 40 | 60 | 110 | 170 |
| MHL-16D2 | | | 80 | 130 | 210 |
| MHL-20D | 20 | 60 | 40 | 82 | 122 |
| MHL-20D1 | | 40 | 80 | 142 | 222 |
| MHL-20D2 | | | 100 | 162 | 262 |
| MHL-25D | 25 | 60 | 50 | 100 | 150 |
| MHL-25D1 | | 40 | 100 | 182 | 282 |
| MHL-25D2 | | | 120 | 200 | 320 |
| MHL-32D | 32 | 30 | 70 | 150 | 220 |
| MHL-32D1 | | 20 | 120 | 198 | 318 |
| MHL-32D2 | | | 160 | 242 | 402 |
| MHL-40D | 40 | 30 | 100 | 188 | 288 |
| MHL-40D1 | | 20 | 160 | 246 | 406 |
| MHL-40D2 | | | 200 | 286 | 486 |

## Parallel Open and Close Type

### Dimension(mm):

### MHL-10D

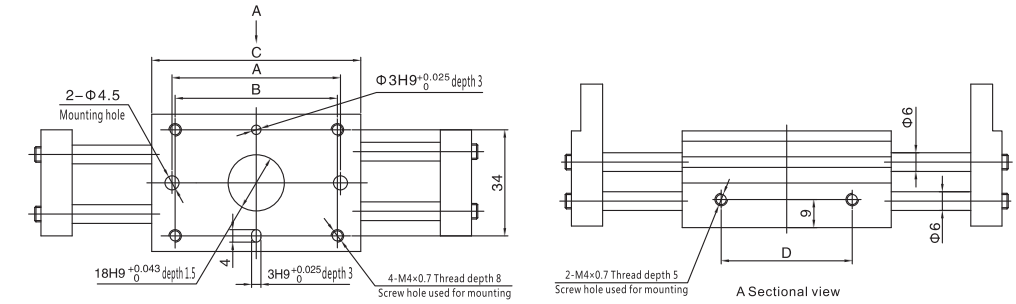


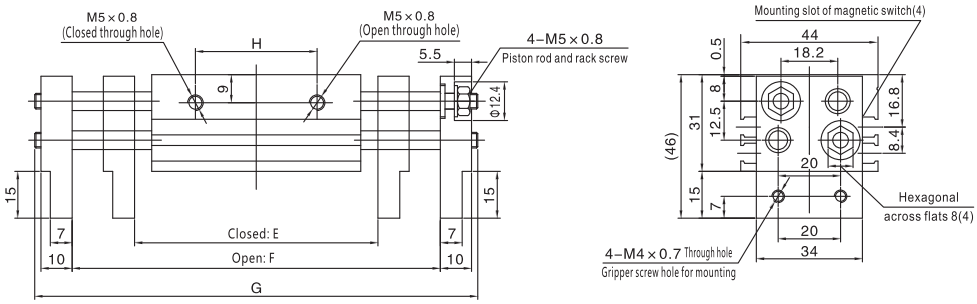


| Type | A | B | C | D | E | F | G | H |
|---|---|---|---|---|---|---|---|---|
| MHL-10D | 38 | 36 | 51 | 26 | 56 | 76 | 100 | 24 |
| MHL-10D1 | 54 | 52 | 67 | 42 | 78 | 118 | 142 | 39 |
| MHL-10D2 | 72 | 70 | 85 | 60 | 96 | 156 | 180 | 57 |

### MHL-16D

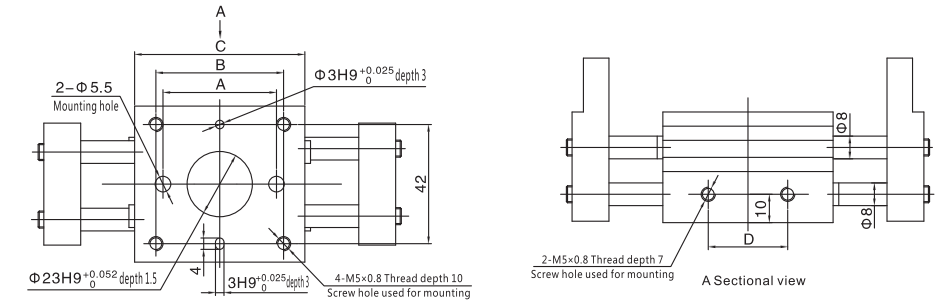


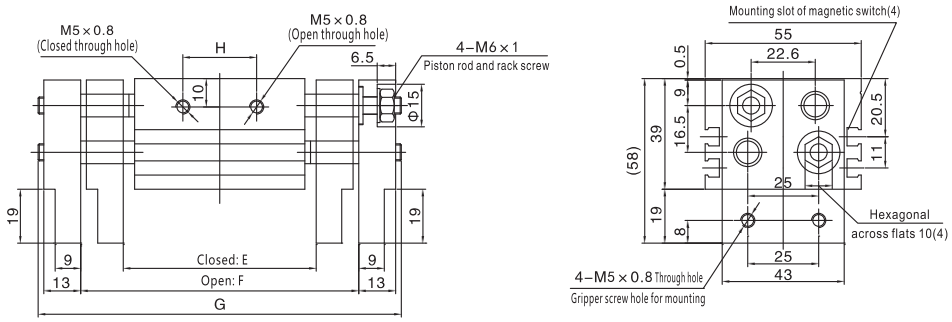


| Type | A | B | C | D | E | F | G | H |
|---|---|---|---|---|---|---|---|---|
| MHL-16D | 40 | 45 | 60 | 28 | 68 | 98 | 128 | 26 |
| MHL-16D1 | 70 | 75 | 90 | 58 | 110 | 170 | 200 | 50 |
| MHL-16D2 | 90 | 95 | 110 | 78 | 130 | 210 | 240 | 70 |

## Parallel Open and Close Type

### Dimension(mm):

### MHL–20D

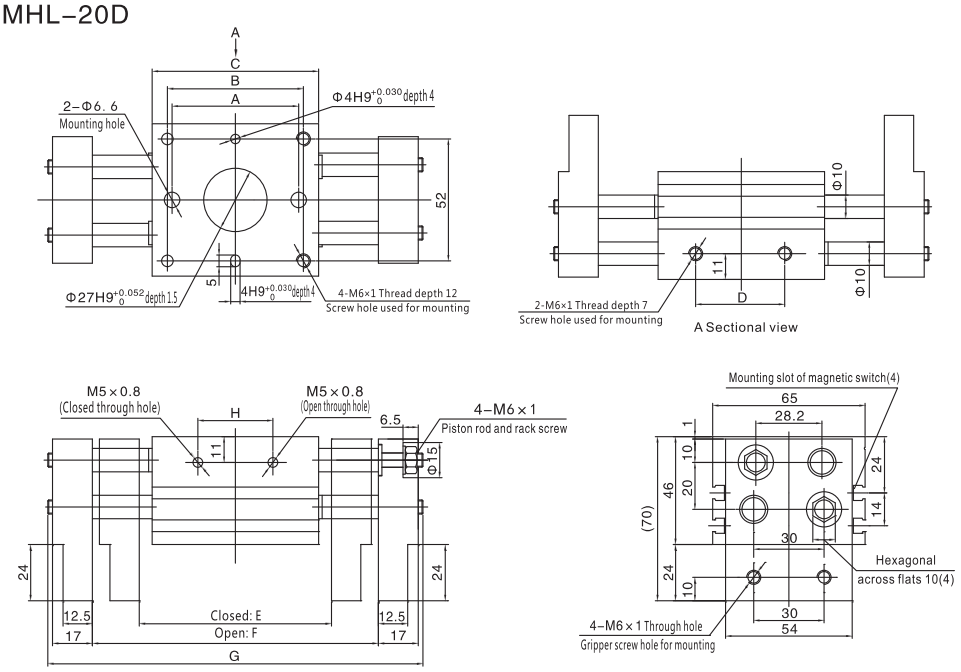


| Type | A | B | C | D | E | F | G | H |
|---|---|---|---|---|---|---|---|---|
| MHL-20D | 54 | 58 | 71 | 38 | 82 | 122 | 160 | 32 |
| MHL-20D1 | 96 | 100 | 113 | 80 | 142 | 222 | 260 | 68 |
| MHL-20D2 | 116 | 120 | 133 | 100 | 162 | 262 | 300 | 88 |

### MHL–25D

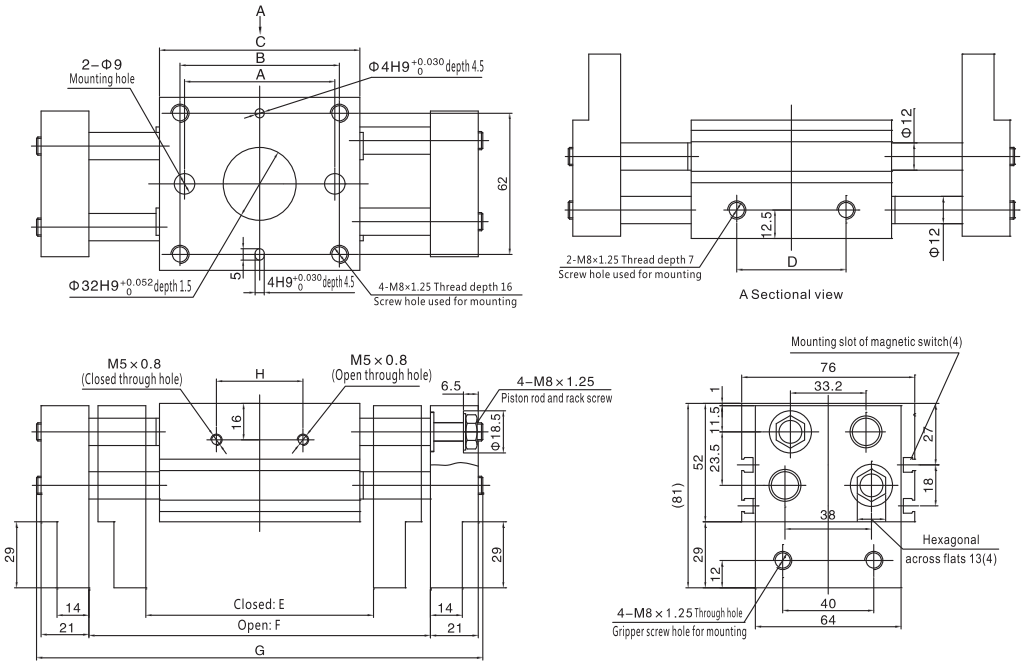


| Type | A | B | C | D | E | F | G | H |
|---|---|---|---|---|---|---|---|---|
| MHL-25D | 66 | 70 | 88 | 48 | 100 | 150 | 196 | 38 |
| MHL-25D1 | 120 | 124 | 142 | 102 | 182 | 282 | 328 | 86 |
| MHL-25D2 | 138 | 142 | 160 | 120 | 200 | 320 | 366 | 104 |

## Parallel Open and Close Type

### Dimension(mm):

### MHL-32D□

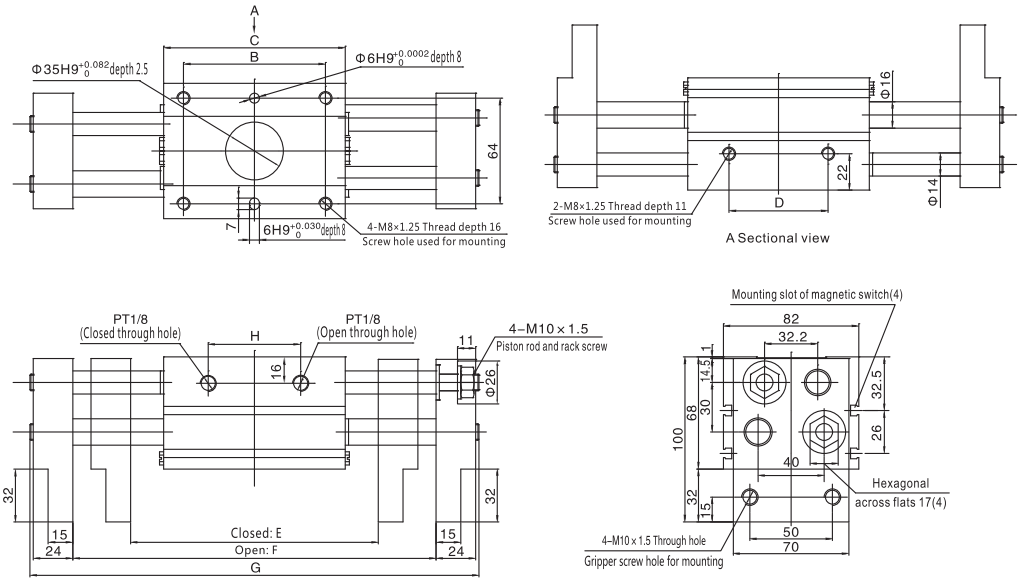


| Type | B | C | D | E | F | G | H |
|---|---|---|---|---|---|---|---|
| MHL-32D | 86 | 110 | 60 | 150 | 220 | 272 | 56 |
| MHL-32D1 | 134 | 158 | 108 | 198 | 318 | 370 | 104 |
| MHL-32D2 | 178 | 202 | 152 | 242 | 402 | 454 | 148 |

### MHL-40D□

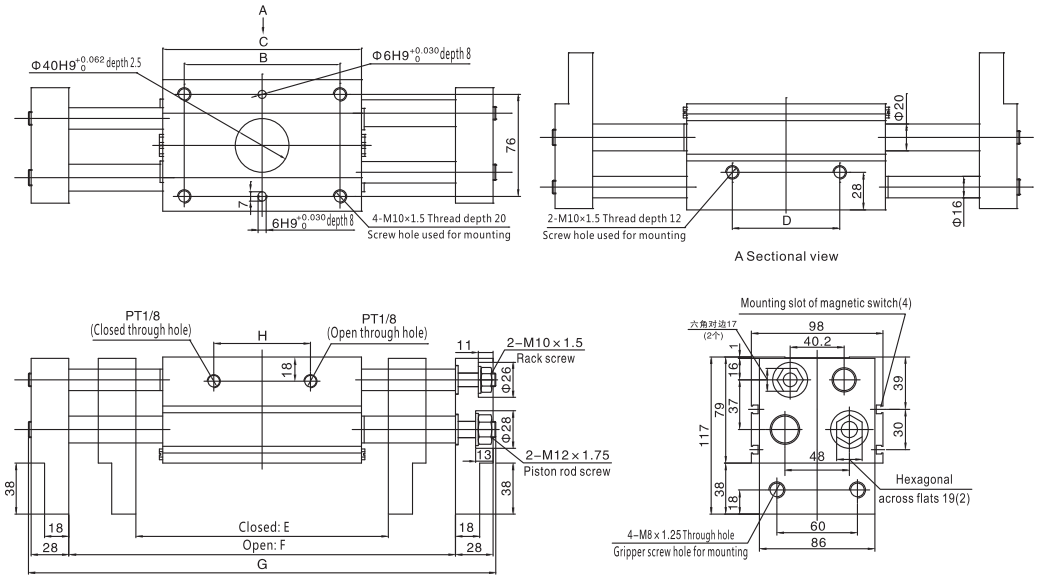


| Type | B | C | D | E | F | G | H |
|---|---|---|---|---|---|---|---|
| MHL-40D | 116 | 148 | 80 | 188 | 288 | 348 | 72 |
| MHL-40D1 | 174 | 206 | 138 | 246 | 406 | 466 | 130 |
| MHL-40D2 | 214 | 246 | 178 | 286 | 486 | 546 | 170 |

# Parallel Open and Close Type

## Specification:

| Type | 8 | 12 | 16 | 20 |
|---|---|---|---|---|
| Fluid | Compressed air (No oil feeding) | | | |
| Acting way | Double acting | | | |
| Working pressure (Mpa) | 0.15~0.7 | 0.1~0.7 | | |
| Ambient and fluid temperature(℃) | -10~60 (but not frozen) | | | |
| Repeated precision (mm) | ±0.05 | | | |
| Maximum frequency of use (c.p.m) | Short stroke, medium stroke: 120; long stroke: 60 | | | |
| Clamping torque(Nm) | 19 | 48 | 90 | 141 |
| Open and closed stroke(both sides)(mm) | 8 , 16 , 32 | 12 , 24 , 48 | 16 , 32 , 64 | 20 , 40 , 80 |

## Symbol:

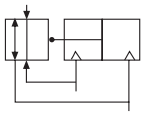

## Product feature:

1. Compared with CKZ series, the height of MHF series is 1/3 decreased.
2. It saves space, reduces moment of force and recurvation, increases the precision.
3. Each opening and closing stroke of the cylinder bore has three types of long, middle and short.

## How to order:

**MHF 12 D □ □ M9B □**

- **Type**
  - Blank: Standard Type
  - Parallel Open and Close Type
- **Bore**
  - Φ8: 8mm
  - Φ12: 12mm
  - Φ16: 16mm
  - Φ20: 20mm
- **Motion**
  - D: Double acting
- **Stroke**
  - Blank: Short stroke
  - 1: Medium stroke
  - 2. Long stroke
- **Connecting type**
  - Blank: Axial piping
  - R: Side piping
- **Magnetic switch model**
  - Blank: No magnetic switch
- **Number of magnetic switches**
  - Blank: 2
  - S : 1

MHF

## Dimension(mm):

### MHF–8D/8D1
### MHF–12D

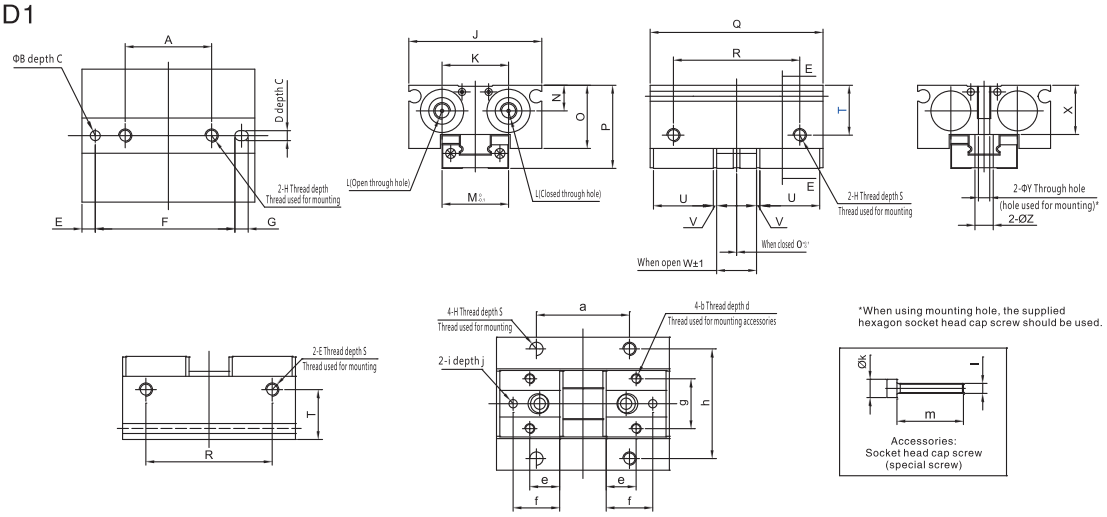


| Type | A | B | C | D | E | F | G | H | I | J | K | L | M | N | O | P | Q | R | S | T | U | V | W | X | Y | Z | a | b | d | e | f | g | h | i | j | k | l | m |
|---|---|---|---|---|---|---|---|---|---|---|---|---|---|---|---|---|---|---|---|---|---|---|---|---|---|---|---|---|---|---|---|---|---|---|---|---|---|---|
| MHF-8D | 16 | $2.5H9^{+0.025}_{0}$ | 2.5 | $2.5H9^{+0.025}_{0}$ | 3 | 28.3 | 3.4 | M3×0.5 | 7 | 32 | 15.8 | M3×0.5 | 17 | 5.9 | 14 | 19 | 36 | 22 | 4 | 11 | 12 | 0.8 | 8 | 11 | 2.6 | 4.5 | 14 | M2.5×0.45 | 3 | 6 | 10 | 12 | 26 | $2H9^{+0.025}_{0}$ | 2 | 4 | M2.5×0.45 | 15 |
| MHF-8D1 | 28 | $2.5H9^{+0.025}_{0}$ | 2.5 | $2.5H9^{+0.025}_{0}$ | 3 | 40.3 | 3.4 | M3×0.5 | 7 | 32 | 15.8 | M3×0.5 | 17 | 5.9 | 14 | 19 | 48 | 34 | 4 | 11 | 14 | 0.8 | 16 | 11 | 2.6 | 4.5 | 26 | M2.5×0.45 | 3 | 7 | 11 | 12 | 26 | $2H9^{+0.025}_{0}$ | 2 | 4 | M2.5×0.45 | 15 |
| MHF-8D2 | 26 | $3H9^{+0.025}_{0}$ | 3 | $3H9^{+0.025}_{0}$ | 4 | 42 | 4 | M4×0.7 | 10 | 40 | 20 | M5×0.8 | 20 | 7.7 | 19 | 25 | 52 | 38 | 5 | 15 | 18 | 1 | 12 | 14.8 | 3.4 | 5.5 | 28 | M3×0.5 | 4 | 9 | 14 | 15 | 33 | $2.5H9^{+0.025}_{0}$ | 2.5 | 5 | M3×0.5 | 20 |

## Parallel Open and Close Type

### Dimension(mm):

### MHF-12D1、16D、16D1、20D、20D1、

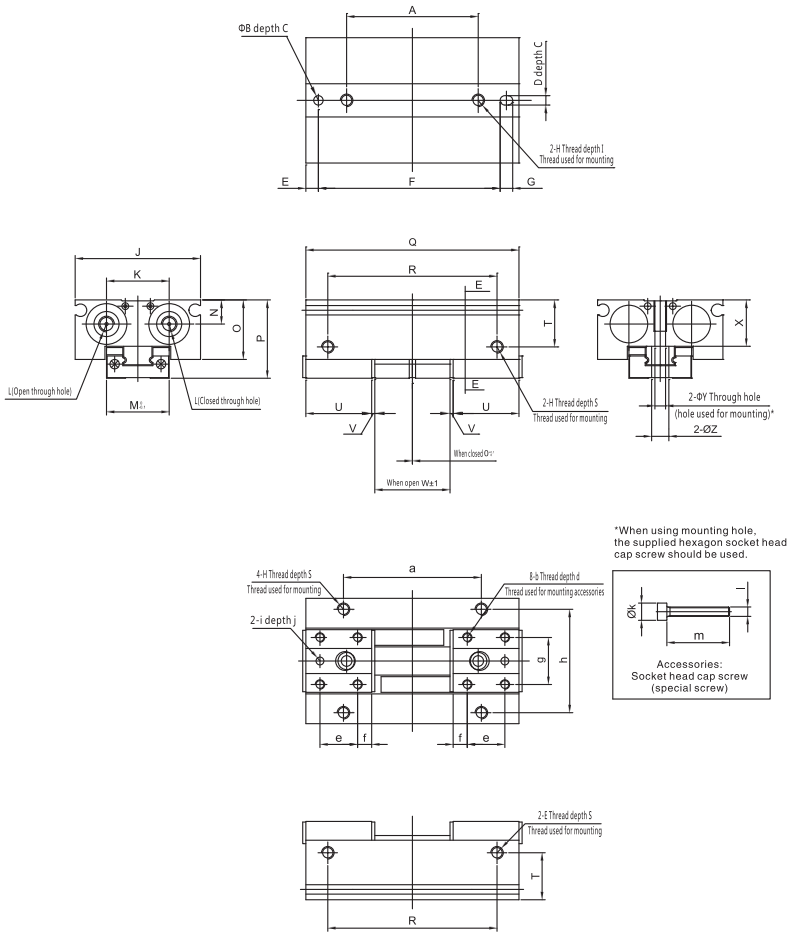


| Type | A | B | C | D | E | F | G | H | I | J | K | L | M | N | O | P | Q | R | S | T | U | V |
|---|---|---|---|---|---|---|---|---|---|---|---|---|---|---|---|---|---|---|---|---|---|---|
| MHF-12D1 | 42 | $3H9^{+0.030}_{0}$ | 3 | $3H9^{+0.025}_{0}$ | 4 | 58 | 4 | M4×0.7 | 10 | 40 | 20 | M5×0.8 | 20 | 7.7 | 19 | 25 | 68 | 54 | 5 | 15 | 21 | 1 |
| MHF-16D | 38 | $4H9^{+0.030}_{0}$ | 3 | $4H9^{+0.030}_{0}$ | 6 | 57.5 | 5 | M5×0.8 | 12 | 50 | 26 | M5×0.8 | 27 | 10.6 | 24 | 33 | 72 | 52 | 5.5 | 20 | 25 | 1.2 |
| MHF-16D1 | 60 | $4H9^{+0.030}_{0}$ | 3 | $4H9^{+0.030}_{0}$ | 3 | 79.5 | 5 | M5×0.8 | 12 | 50 | 26 | M5×0.8 | 27 | 10.6 | 24 | 33 | 94 | 74 | 5.5 | 20 | 29 | 1.2 |
| MHF-20D | 38 | $5H9^{+0.030}_{0}$ | 4 | $5H9^{+0.030}_{0}$ | 4 | 71 | 6 | M6×1 | 15 | 62 | 33 | M5×0.8 | 32 | 13 | 30 | 41 | 86 | 56 | 6 | 25 | 31 | 1.2 |
| MHF-20D1 | 66 | $5H9^{+0.030}_{0}$ | 4 | $5H9^{+0.030}_{0}$ | 6 | 99 | 6 | M6×1 | 15 | 62 | 33 | M5×0.8 | 32 | 13 | 30 | 41 | 114 | 84 | 6 | 25 | 36 | 1.2 |

| Type | W | X | Y | Z | a | b | d | e | f | g | h | l | j | k | l | m |
|---|---|---|---|---|---|---|---|---|---|---|---|---|---|---|---|---|
| MHF-12D1 | 24 | 14.8 | 3.4 | 5.5 | 44 | M3×0.5 | 4 | 12 | 4.5 | 15 | 33 | $2.5H9^{+0.025}_{0}$ | 2.5 | Φ5 | M3×0.5 | 20 |
| MHF-16D | 16 | 20 | 4.3 | 7.5 | 36 | M4×0.7 | 4 | 15 | 5 | 20 | 43 | $3H9^{+0.025}_{0}$ | 3 | – | – | – |
| MHF-16D1 | 32 | 20 | 4.3 | 7.5 | 58 | M4×0.7 | 4 | 18 | 5.5 | 20 | 43 | $3H9^{+0.025}_{0}$ | 3 | – | – | – |
| MHF-20D | 20 | 25 | 5.2 | 10 | 40 | M4×0.7 | 4 | 16 | 7.5 | 24 | 52 | $3H9^{+0.025}_{0}$ | 3 | – | – | – |
| MHF-20D1 | 40 | 25 | 5.2 | 10 | 68 | M4×0.7 | 4 | 20 | 8 | 24 | 52 | $3H9^{+0.025}_{0}$ | 3 | – | – | – |

### MHF-8D2、12D2
### MHF-16D2、20D2

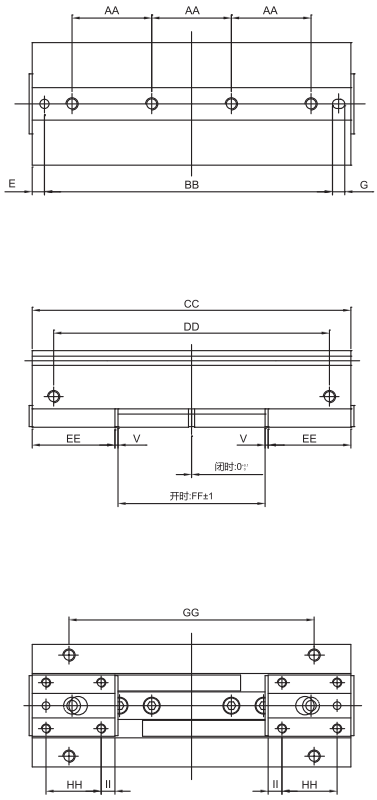


*The dimensions not indicated are the same as those of the D1 series.

| Type | AA | BB | CC | DD | EE | FF | GG | HH | II |
|---|---|---|---|---|---|---|---|---|---|
| MHF-8D | 17 | 64.3 | 72 | 58 | 18 | 32 | 50 | 8 | 5 |
| MHF-12D2 | 26 | 94 | 104 | 90 | 27 | 48 | 80 | 18 | 4.5 |
| MHF-16D2 | 36 | 127.5 | 142 | 122 | 37 | 64 | 106 | 26 | 5.5 |
| MHF-20D2 | 42 | 159 | 174 | 144 | 46 | 80 | 128 | 30 | 8 |

# MHS□3 Series Three Jaw Cylindrical Air Gripper

SDPC®

## Parallel Open and Close Type

## Specification:

| Type | | 16 | 20 | 25 | 32 | 40 | 50 | 63 | 80 | 100 | 125 |
|---|---|---|---|---|---|---|---|---|---|---|---|
| Fluid | | Compressed air | | | | | | | | | |
| Acting way | | Double acting | | | | | | | | | |
| Working pressure(Mpa) | | 0.2~0.6 | | | 0.1~0.6 | | | | | | |
| Ambient and fluid temperature(℃) | | -10~60 | | | | | | | | | |
| Repeated precision (mm) | | ±0.01 | | | | | | | | | |
| Maximum frequency of use (c.p.m) | | 120 | | | 60 | | | | 30 | | |
| Oil feeding | | Not required | | | | | | | | | |
| Clamping torque(Nm) | Outside diameter clamping | 14 | 25 | 42 | 74 | 118 | 187 | 335 | 500 | 750 | 1270 |
| | Internal diameter clamping | 16 | 28 | 47 | 82 | 130 | 204 | 359 | 525 | 780 | 1320 |
| Port size | | M3×0.5 | M5×0.8 | | | | | | 1/8 | 1/4 | 3/8 |
| Magnetic switch | | Built-in magnet ring type | | | | | | | | | |

## Symbol:

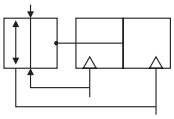

## Product feature:

1. The interior adopts wedge structure to get larger clamping force.
2. The front cover of the piston with fenders can reduce metallic sound when the clamping jaw releases.
3. The bottom of the body is equipped with dowel holes to improve installation accuracy and repeating disassembling positioning consistency.
4. With high clamping repeating precision, it is easy for automation equipment to install and use.
5. Various series and standard pneumatic finger types are optional for customers to clamp different kinds of working pieces.

## How to order:

**MHS□3 32 D □ M9N □**

- Type
  - Blank: Standard Type
  - L: Long Stroke
- Bore
  - Φ16: 16mm
  - Φ20: 20mm
  - Φ25: 25mm
  - Φ32: 32mm
  - Φ40: 40mm
  - Φ50: 50mm
  - Φ63: 63mm
  - Φ80: 80mm
  - Φ100: 100mm
  - Φ125: 125mm
- Motion
  - D: Double acting
- Cylinder color
  - Blank: Hard oxygen natural color
  - A: Hard oxygen black
  - B: Hard oxygen gold
  - C: Hard oxygen pink
  - D: Please contact the sales person for special colors.
- Magnetic switch model
  - Blank: No magnetic switch
- Number of magnetic switches
  - Blank: 2
  - S: 1
  - N: N

MHS□3

## Dimension(mm):

### MHS3–16D~25D

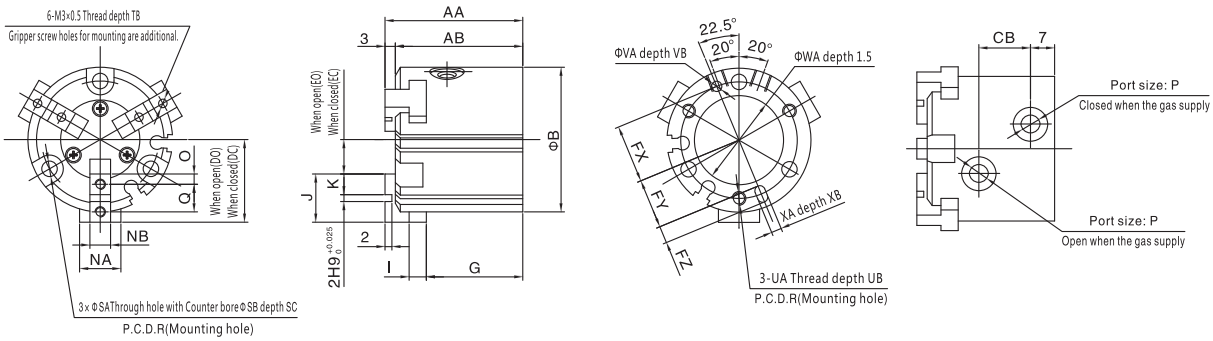


| Type | AA | AB | B | CB | DC | DO | EC | EO | FX | FY | FZ | G | I | J | K | NA | NB | O | P | Q | R |
|---|---|---|---|---|---|---|---|---|---|---|---|---|---|---|---|---|---|---|---|---|---|
| MHS3-16D | 35 | 32 | 30 | 11 | 15 | 17 | 5 | 7 | 12.5 | 11 | 3 | 25 | 4 | 10 | 4 | 8 | 5h9 0 −0.030 | 2 | M3X0.5 | 6 | 25 |
| MHS3-20D | 38 | 35 | 36 | 13 | 18 | 20 | 6 | 8 | 14.5 | 13 | 3 | 27 | 5 | 12 | 5 | 10 | 6h9 0 −0.030 | 2.5 | M5X0.8 | 7 | 29 |
| MHS3-25D | 40 | 37 | 42 | 15 | 21 | 24 | 7 | 10 | 17 | 14.5 | 5 | 28 | 5 | 14 | 6 | 12 | 6h9 0 −0.030 | 3 | M5X0.8 | 8 | 34 |

| Type | SA | SB | SC | TB | UA | UB | VA | VB | WA | XA | XB |
|---|---|---|---|---|---|---|---|---|---|---|---|
| MHS3-16D | 3.4 | 6.5 | 8 | 5 | M3X0.5 | 4.5 | 2H9 +0.025 −0 | 2 | 17H9 +0.043 −0 | 2H9 0+0.025 −0 | 2 |
| MHS3-20D | 3.4 | 6.5 | 9.5 | 6 | M3X0.5 | 6 | 2H9 +0.025 −0 | 2 | 21H9 +0.052 −0 | 2H9 0+0.025 −0 | 2 |
| MHS3-25D | 4.5 | 8 | 10 | 6 | M4X0.7 | 6 | 3H9 +0.025 −0 | 3 | 26H9 +0.052 −0 | 3H9 0+0.025 −0 | 3 |

## Parallel Open and Close Type

### Dimension(mm):

#### MHS3-32D~80D

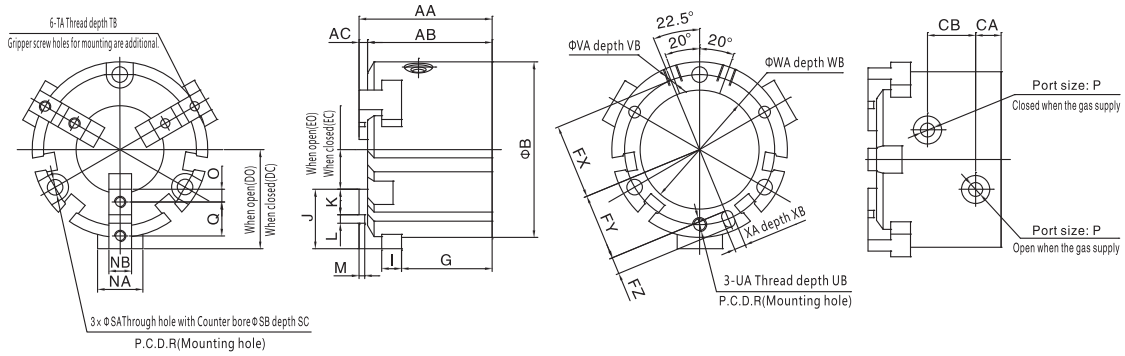


| Type | AA | AB | AC | B | CA | CB | DC | DO | EC | EO | FX | FY | FZ | G | I | J | K | L | M | NA | NB |
|---|---|---|---|---|---|---|---|---|---|---|---|---|---|---|---|---|---|---|---|---|---|
| MHS3-32D | 44 | 41 | 3 | 52 | 8 | 16 | 28 | 32 | 8 | 12 | 22 | 19.5 | 5 | 30.5 | 6 | 20 | 9 | $2H9^{+0.025}_{0}$ | 2 | 14 | $8h9^{0}_{-0.036}$ |
| MHS3-40D | 47 | 44 | 3 | 62 | 9 | 17 | 31 | 35 | 10 | 14 | 26.5 | 23.5 | 6 | 32 | 7 | 21 | 9 | $3H9^{+0.025}_{0}$ | 2 | 16 | $8h9^{0}_{-0.036}$ |
| MHS3-50D | 55 | 52 | 3 | 70 | 9 | 20 | 35 | 41 | 11 | 17 | 31 | 28 | 6 | 37.5 | 9 | 24 | 10 | $4H9^{+0.030}_{0}$ | 2 | 18 | $10h9^{0}_{-0.036}$ |
| MHS3-63D | 66 | 62 | 4 | 86 | 12 | 22 | 43 | 51 | 15 | 23 | 38 | 34.5 | 7 | 44 | 11 | 28 | 11 | $6H9^{+0.030}_{0}$ | 3 | 24 | $12h9^{0}_{-0.043}$ |
| MHS3-80D | 82 | 77 | 5 | 106 | 13.5 | 27 | 53.5 | 63.5 | 21.5 | 31.5 | 47.5 | 43.5 | 8 | 56 | 12 | 32 | 12 | $8H9^{+0.036}_{0}$ | 4 | 28 | $14h9^{0}_{-0.043}$ |

| Type | O | P | Q | R | SA | SB | SC | TA | TB | UA | UB | VA | VB | WA | WB | XA | XB | YC |
|---|---|---|---|---|---|---|---|---|---|---|---|---|---|---|---|---|---|---|
| MHS3-32D | 4.5 | M5×0.8 | 11 | 44 | 4.5 | 8 | 9 | M4×0.7 | 8 | M4×0.7 | 6 | $3H9^{+0.025}_{0}$ | 3 | $34H9^{+0.062}_{0}$ | 2 | $3H9^{+0.025}_{0}$ | 3 | 6 |
| MHS3-40D | 4.5 | M5×0.8 | 12 | 53 | 5.5 | 9.5 | 9 | M4×0.7 | 8 | M5×0.8 | 7.5 | $4H9^{+0.030}_{0}$ | 4 | $42H9^{+0.062}_{0}$ | 2 | $4H9^{+0.030}_{0}$ | 4 | 8 |
| MHS3-50D | 5 | M5×0.8 | 14 | 62 | 5.5 | 9.5 | 12 | M5×0.8 | 10 | M5×0.8 | 10 | $4H9^{+0.030}_{0}$ | 4 | $52H9^{+0.074}_{0}$ | 2 | $4H9^{+0.030}_{0}$ | 4 | 7 |
| MHS3-63D | 5.5 | M5×0.8 | 17 | 76 | 6.6 | 11 | 14 | M5×0.8 | 10 | M6×1 | 9 | $5H9^{+0.030}_{0}$ | 5 | $65H9^{+0.074}_{0}$ | 2.5 | $5H9^{+0.030}_{0}$ | 5 | 7.5 |
| MHS3-80D | 6 | PT1/8 | 20 | 95 | 6.6 | 11 | 19 | M6×1 | 12 | M6×1 | 12 | $6H9^{+0.030}_{0}$ | 6 | $82H9^{+0.087}_{0}$ | 3 | $6H9^{+0.030}_{0}$ | 6 | 8 |

MHS□3

#### MHS3-100D~125D

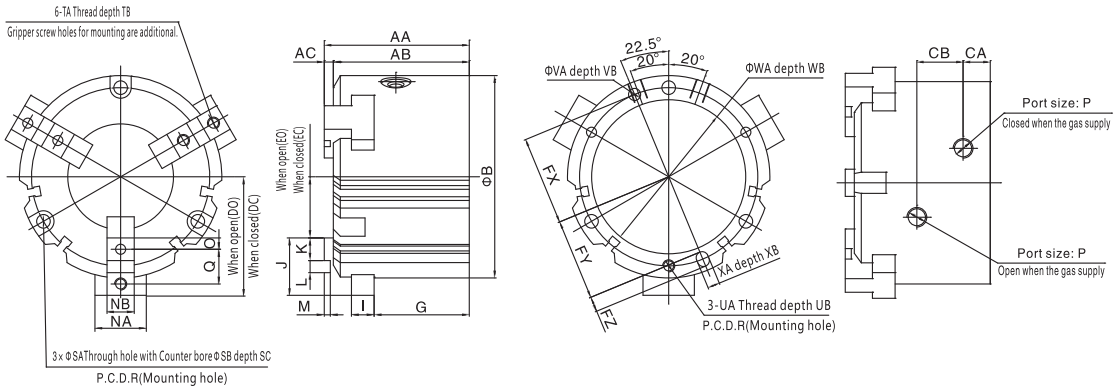


| Type | AA | AB | AC | B | CA | CB | DC | DO | EC | EO | FX | FY | FZ | G | I | J | K | L | M | NA | NB |
|---|---|---|---|---|---|---|---|---|---|---|---|---|---|---|---|---|---|---|---|---|---|
| MHS3-100D | 96 | 90 | 6 | 134 | 18 | 30.6 | 66 | 78 | 28 | 40 | 59 | 54 | 10 | 63 | 15 | 38 | 15 | $8H9^{+0.036}_{0}$ | 4 | 34 | $18h9^{0}_{-0.043}$ |
| MHS3-125D | 122 | 114 | 8 | 166 | 23.5 | 38 | 82 | 98 | 30 | 46 | 74 | 68 | 12 | 84 | 18 | 52 | 21 | $10H9^{+0.036}_{0}$ | 6 | 40 | $22h9^{0}_{-0.052}$ |

| Type | O | P | Q | R | SA | SB | SC | TA | TB | UA | UB | VA | VB | WA | WB | XA | XB |
|---|---|---|---|---|---|---|---|---|---|---|---|---|---|---|---|---|---|
| MHS3-100D | 7.5 | PT1/4 | 23 | 118 | 9 | 14 | 21 | M8×1.25 | 16 | M8×1.25 | 16 | $8H9^{+0.036}_{0}$ | 6 | $102H9^{+0.087}_{0}$ | 4 | $8H9^{+0.036}_{0}$ | 6 |
| MHS3-125D | 10.5 | PT3/8 | 31 | 148 | 11 | 17.5 | 34 | M10×1.5 | 20 | M10×1.5 | 20 | $10H9^{+0.036}_{0}$ | 8 | $130H9^{+0.100}_{0}$ | 6 | $10H9^{+0.036}_{0}$ | 8 |

## Parallel Open and Close Type

### Dimension(mm):

#### MHSL3-16D~25D

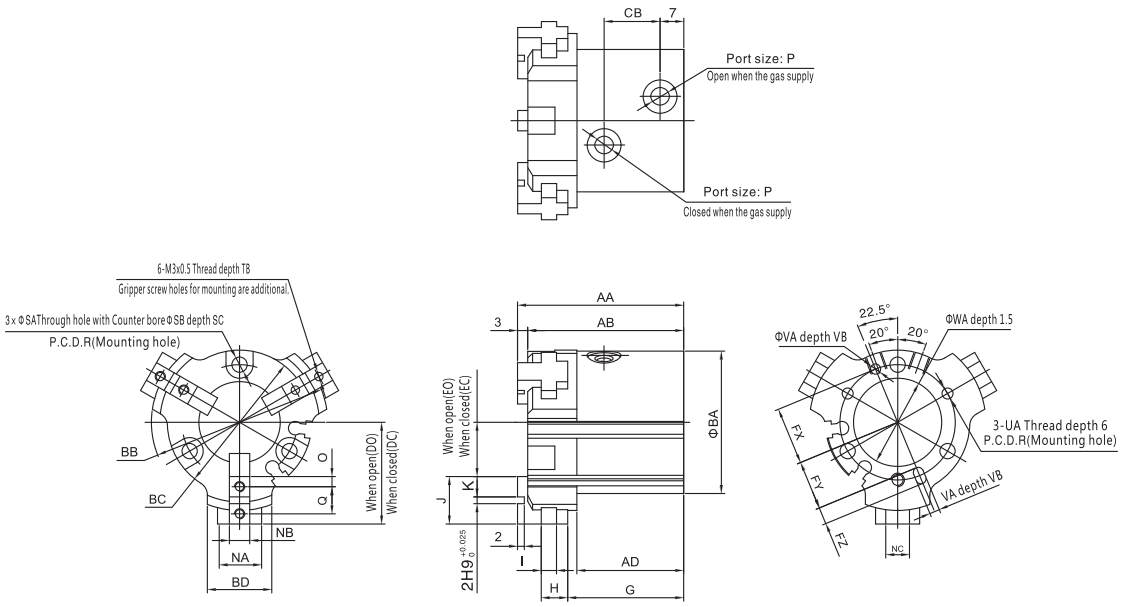


| Type | AA | AB | AD | BA | BB | BC | BD | CB | DO | DC | EO | EC | FX | FY | FZ | G | H | I | J | K | NA |
|---|---|---|---|---|---|---|---|---|---|---|---|---|---|---|---|---|---|---|---|---|---|
| MHSL3-16D | 43.5 | 40.5 | 28 | 30 | 40 | 30.6 | 12 | 14 | 23.5 | 18.5 | 13.5 | 8.5 | 12.5 | 11 | 3 | 30.5 | 7 | 4 | 10 | 4 | 8 |
| MHSL3-20D | 46 | 43 | 29 | 36 | 45 | 36.6 | 16 | 14 | 26 | 21 | 14 | 9 | 14.5 | 13 | 3 | 32 | 8 | 4 | 12 | 5 | 11 |
| MHSL3-25D | 49 | 46 | 31.5 | 42 | 52 | 42.6 | 19 | 16.5 | 30 | 24 | 16 | 10 | 17 | 14.5 | 5 | 34.2 | 7.8 | 4.5 | 14 | 6 | 13 |

| Type | NB | NC | O | P | Q | R | SA | SB | SC | TB | UA | VA | VB | WA | XA | XB |
|---|---|---|---|---|---|---|---|---|---|---|---|---|---|---|---|---|
| MHSL3-16D | $5h9^{0}_{-0.030}$ | 5 | 2 | M3×0.5 | 6 | 25 | 3.4 | 6.5 | 5 | 5 | M3×0.5 | $2H9^{+0.025}_{0}$ | 2 | $17H9^{+0.043}_{0}$ | $2H9^{+0.025}_{0}$ | 2 |
| MHSL3-20D | $6h9^{0}_{-0.030}$ | 7 | 2.5 | M5×0.8 | 7 | 29 | 3.4 | 6.5 | 8 | 6 | M3×0.5 | $2H9^{+0.025}_{0}$ | 2 | $21H9^{+0.052}_{0}$ | $2H9^{+0.025}_{0}$ | 2 |
| MHSL3-25D | $6h9^{0}_{-0.030}$ | 7 | 3 | M5×0.8 | 8 | 34 | 4.5 | 8 | 8 | 6 | M4×0.7 | $3H9^{+0.025}_{0}$ | 3 | $26H9^{+0.052}_{0}$ | $3H9^{+0.025}_{0}$ | 3 |

# Parallel Open and Close Type

## Specification:

| Type | | 16 | 20 | 25 | 32 | 40 | 50 | 63 |
|---|---|---|---|---|---|---|---|---|
| Fluid | | Compressed air | | | | | | |
| Acting way | | Double acting | | | | | | |
| Working pressure(Mpa) | | 0.2~0.6 | | | 0.1~0.6 | | | |
| Ambient and fluid temperature(℃) | | -10~60 | | | | | | |
| Repeated precision (mm) | | ±0.01 | | | | | | |
| Maximum frequency of use (c.p.m) | | 120 | | | 60 | | | |
| Oil feeding | | | | | | | | |
| Clamping torque(Nm) | Outside diameter clamping | 21 | 37 | 63 | 111 | 177 | 280 | 502 |
| | Internal diameter clamping | 23 | 42 | 71 | 123 | 195 | 306 | 537 |
| Port size | | M3×0.5 | M5×0.8 | | | | | |
| Magnetic switch | | Built-in magnet ring type | | | | | | |

## Symbol:

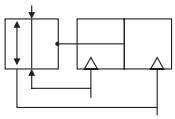

## Product feature:

MHS2

1. The interior adopts wedge structure to get larger clamping force.
2. The front cover of the piston with fenders can reduce metallic sound when the clamping jaw releases.
3. The bottom of the body is equipped with dowel holes to improve installation accuracy and repeating disassembling positioning consistency.
4. With high clamping repeating precision, it is easy for automation equipment to install and use.
5. Various series and standard pneumatic finger types are optional for customers to clamp different kinds of working pieces.

## How to order:

**MHS2 20 D □ M9N □**

- **Type**
  - Blank: Standard Type
  - Parallel Open and Close Type
- **Bore**
  - Φ16: 16mm
  - Φ20: 20mm
  - Φ25: 25mm
  - Φ32: 32mm
  - Φ40: 40mm
  - Φ50: 50mm
  - Φ63: 63mm
- **Acting way**
  - D: Double acting
- **Cylinder color**
  - Blank: Hard oxygen natural color
  - A: Hard oxygen black
  - B: Hard oxygen gold
  - C: Hard oxygen pink
  - D: Please contact the sales person for special colors.
- **Magnetic switch model**
  - Blank: No magnetic switch
- **Number of magnetic switches**
  - Blank: 2
  - S: 1

## Dimension(mm):

### MHS2-16~25D

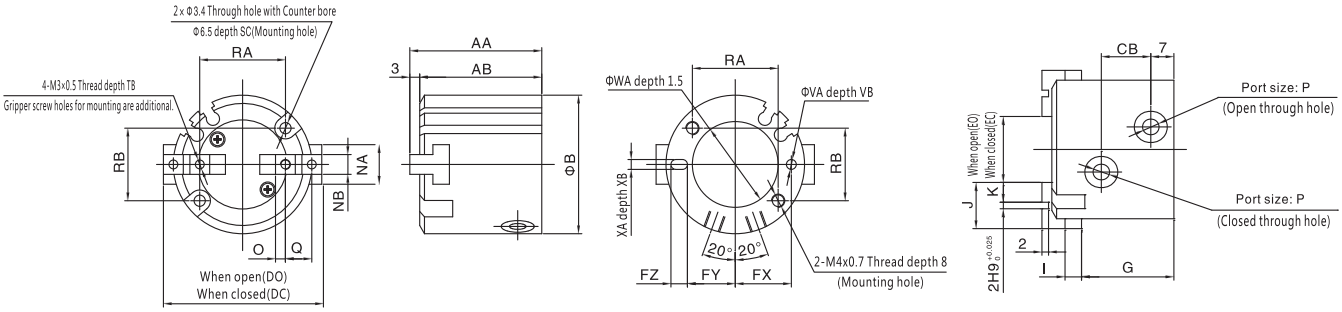


| Type | A4 | AB | B | CB | DC | DO | EC | EO | FX | FY | FZ | G | I | J | H | NA | NB | O | P | Q |
|---|---|---|---|---|---|---|---|---|---|---|---|---|---|---|---|---|---|---|---|---|
| MHS2-16D | 35 | 32 | 30 | 11 | 30 | 34 | 10 | 14 | 12.5 | 11 | 3 | 25 | 4 | 10 | 4 | 8 | $5h9^{0}_{-0.030}$ | 2 | M3X0.5 | 6 |
| MHS2-20D | 38 | 35 | 36 | 13 | 36 | 40 | 12 | 16 | 14.5 | 13 | 3 | 27 | 5 | 12 | 5 | 10 | $6h9^{0}_{-0.030}$ | 2.5 | M5X0.8 | 7 |
| MHS2-25D | 40 | 37 | 42 | 15 | 42 | 48 | 14 | 20 | 17 | 14.5 | 5 | 28 | 5 | 14 | 6 | 12 | $6h9^{0}_{-0.030}$ | 3 | M5X0.8 | 8 |

| Type | RA | RB | SC | TB | VA | VB | WA | X4 | XB |
|---|---|---|---|---|---|---|---|---|---|
| MHS2-16D | 18 | 16 | 8 | 5 | $2H9^{+0.025}_{-0}$ | 2 | $17H9^{+0.043}_{-0}$ | $2H9^{0+0.025}_{-0}$ | 2 |
| MHS2-20D | 24 | 18 | 9.5 | 6 | $2H9^{+0.025}_{-0}$ | 2 | $21H9^{+0.052}_{-0}$ | $2H9^{0+0.025}_{-0}$ | 2 |
| MHS2-25D | 26 | 22 | 10 | 6 | $3H9^{+0.025}_{-0}$ | 3 | $26H9^{+0.052}_{-0}$ | $3H9^{0+0.025}_{-0}$ | 3 |

## Parallel Open and Close Type

### Dimension(mm):

### MHS2-32D~40D

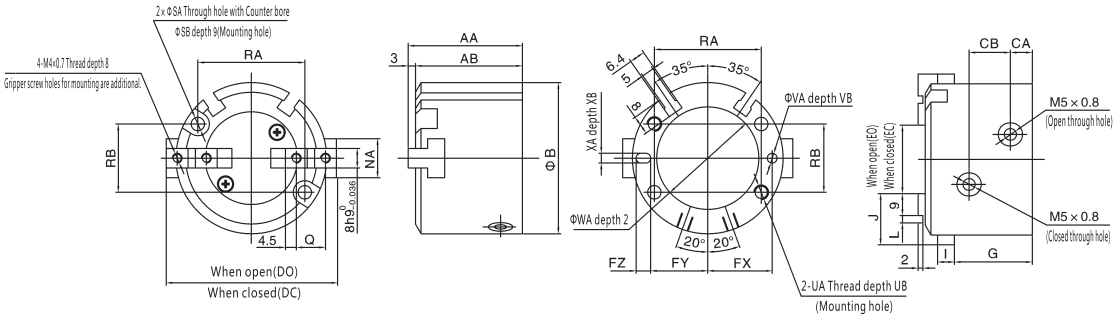


| Type | AA | AB | B | CA | CB | DC | DO | EC | EO | FX | FY | FZ | G | I | J | L |
|---|---|---|---|---|---|---|---|---|---|---|---|---|---|---|---|---|
| MHS2-32D | 44 | 41 | 56 | 8 | 16 | 56 | 64 | 16 | 24 | 23 | 20.5 | 5 | 30.5 | 6 | 20 | $2H9^{+0.025}_{-0}$ |
| MHS2-40D | 47 | 44 | 62 | 9 | 17 | 62 | 70 | 20 | 28 | 26.5 | 23.5 | 6 | 32 | 7 | 21 | $3H9^{+0.025}_{-0}$ |

| Type | NA | Q | RA | RB | SA | SB | UA | UB | VA | VB | WA | XA | XB |
|---|---|---|---|---|---|---|---|---|---|---|---|---|---|
| MHS2-32D | 14 | 11 | 38 | 25 | 4.5 | 8 | M5x0.8 | 10 | $3H9^{+0.025}_{-0}$ | 3 | $34H9^{+0.025}_{-0}$ | $3H9^{+0.025}_{-0}$ | 3 |
| MHS2-40D | 16 | 12 | 44 | 28 | 5.5 | 9.5 | M6x1 | 12 | $4H9^{+0.025}_{-0}$ | 4 | $42H9^{+0.025}_{-0}$ | $4H9^{+0.025}_{-0}$ | 4 |

### MHS2-50D~63D

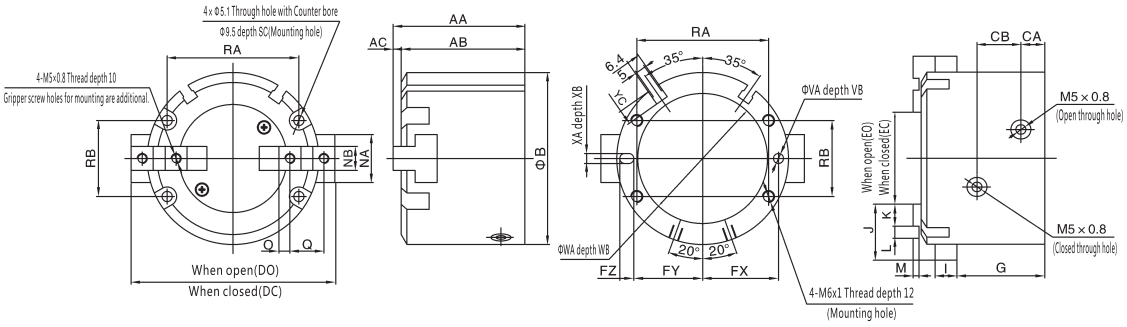


| Type | AA | AB | AC | B | CA | CB | DC | DO | EC | EO | FX | FY | FZ | G | I | J | K | L |
|---|---|---|---|---|---|---|---|---|---|---|---|---|---|---|---|---|---|---|
| MHS2-50D | 55 | 52 | 3 | 70 | 9 | 20 | 70 | 82 | 22 | 34 | 31 | 28 | 6 | 37.5 | 9 | 24 | 10 | $4H9^{+0.030}_{-0}$ |
| MHS2-63D | 66 | 62 | 4 | 86 | 12 | 22 | 86 | 102 | 30 | 46 | 38 | 34.5 | 7 | 44 | 11 | 28 | 11 | $6H9^{+0.030}_{-0}$ |

| Type | M | NA | NB | O | Q | RA | RB | SC | VA | VB | WA | WB | XA | XB | YC |
|---|---|---|---|---|---|---|---|---|---|---|---|---|---|---|---|
| MHS2-50D | 2 | 18 | $10H9^{0}_{-0.036}$ | 5 | 14 | 52 | 34 | 12 | $4H9^{+0.030}_{-0}$ | 4 | $52H9^{+0.074}_{-0}$ | 2 | $4H9^{+0.030}_{-0}$ | 4 | 7 |
| MHS2-63D | 3 | 24 | $12H9^{0}_{-0.0.36}$ | 5.5 | 17 | 66 | 38 | 14 | $5H9^{+0.030}_{-0}$ | 5 | $65H9^{+0.074}_{-0}$ | 2.5 | $5H9^{+0.030}_{-0}$ | 5 | 7.5 |

# Parallel Open and Close Type

## Specification:

| Type | | 16 | 20 | 25 | 32 | 40 | 50 | 63 |
|---|---|---|---|---|---|---|---|---|
| Fluid | | Compressed air | | | | | | |
| Acting way | | Double acting | | | | | | |
| Working pressure(Mpa) | | 0.2~0.6 | | | 0.1~0.6 | | | |
| Ambient and fluid temperature(℃) | | -10~60 | | | | | | |
| Repeated precision (mm) | | ±0.01 | | | | | | |
| Maximum frequency of use (c.p.m) | | 120 | | | 60 | | | |
| Oil feeding | | | | | | | | |
| Clamping torque(Nm) | Outside diameter clamping | 10 | 19 | 31 | 55 | 88 | 140 | 251 |
| | Internal diameter clamping | 12 | 21 | 35 | 61 | 97 | 153 | 268 |
| Port size | | M3×0.5 | M5×0.8 | | | | | |
| Magnetic switch | | Built-in magnet ring type | | | | | | |

## Symbol:

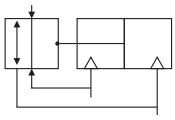

## Product feature:

MHS4

1. The interior adopts wedge structure to get larger clamping force.
2. The front cover of the piston with fenders can reduce metallic sound when the clamping jaw releases.
3. The bottom of the body is equipped with dowel holes to improve installation accuracy and repeating disassembling positioning consistency.
4. With high clamping repeating precision, it is easy for automation equipment to install and use.
5. Various series and standard pneumatic finger types are optional for customers to clamp different kinds of working pieces.

## How to order:

**MHS4 20 D □ M9N □**

- **Type**
  - Blank: Standard Type
  - Parallel Open and Close Type
- **Bore**
  - Φ16: 16mm
  - Φ20: 20mm
  - Φ25: 25mm
  - Φ32: 32mm
  - Φ40: 40mm
  - Φ50: 50mm
  - Φ63: 63mm
- **Acting way**
  - D: Double acting
- **Cylinder color**
  - Blank: Hard oxygen natural color
  - A: Hard oxygen black
  - B: Hard oxygen gold
  - C: Hard oxygen pink
  - D: Please contact the sales person for special colors.
- **Magnetic switch model**
  - Blank: No magnetic switch
- **Number of magnetic switches**
  - Blank: 2
  - S: 1

## Dimension(mm):

### MHS4-16~25D

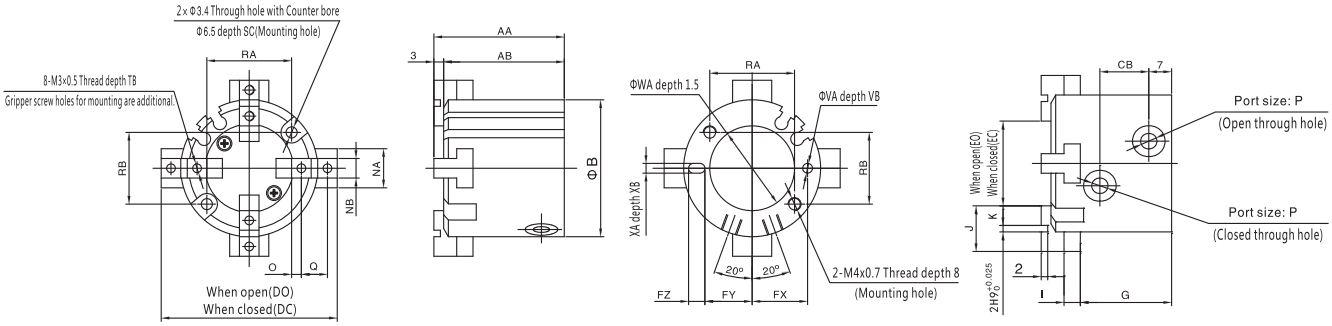


| Type | AA | AB | B | CB | DC | DO | EC | EO | FX | FY | FZ | G | I | J | K | NA | NB | O | P | Q |
|---|---|---|---|---|---|---|---|---|---|---|---|---|---|---|---|---|---|---|---|---|
| MHS4-16D | 35 | 32 | 30 | 11 | 33 | 37 | 13 | 17 | 12.5 | 11 | 3 | 25 | 4 | 10 | 4 | 8 | $5h9_{-0.030}^{0}$ | 2 | M3x0.5 | 6 |
| MHS4-20D | 38 | 35 | 36 | 13 | 39 | 43 | 15 | 19 | 14.5 | 13 | 3 | 27 | 5 | 12 | 5 | 10 | $6h9_{-0.030}^{0}$ | 2.5 | M5x0.8 | 7 |
| MHS4-25D | 40 | 37 | 42 | 15 | 48 | 54 | 20 | 26 | 17 | 14.5 | 5 | 28 | 5 | 14 | 6 | 12 | $6h9_{-0.030}^{0}$ | 3 | M5x0.8 | 8 |

| Type | RA | RB | SC | TB | VA | VB | WA | XA | XB |
|---|---|---|---|---|---|---|---|---|---|
| MHS4-16D | 18 | 16 | 8 | 5 | $2H9^{+0.025}_{0}$ | 2 | $17H9^{+0.043}_{0}$ | $2H9^{+0.025}_{0}$ | 2 |
| MHS4-20D | 24 | 18 | 9.5 | 6 | $2H9^{+0.025}_{0}$ | 2 | $21H9^{+0.052}_{0}$ | $2H9^{+0.025}_{0}$ | 2 |
| MHS4-25D | 26 | 22 | 10 | 6 | $3H9^{+0.025}_{0}$ | 3 | $26H9^{+0.052}_{0}$ | $3H9^{+0.025}_{0}$ | 3 |

## Parallel Open and Close Type

### Dimension(mm):

#### MHS4-32~40D

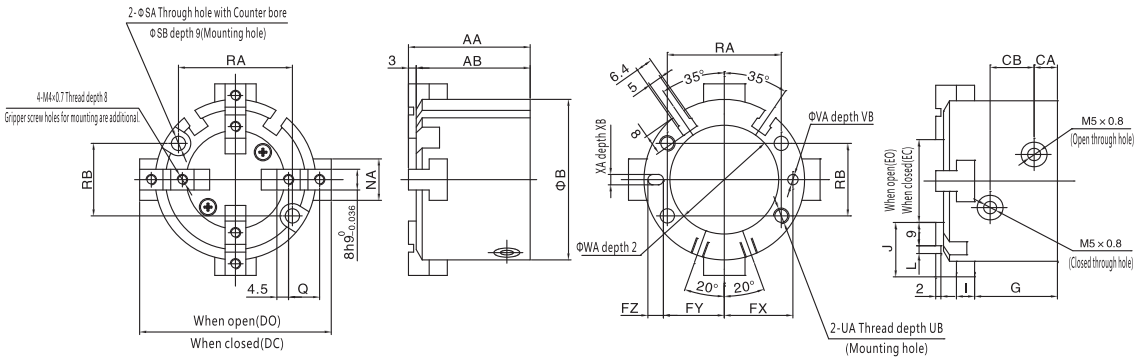


| Type | AA | AB | B | CA | CB | DC | DO | EC | EO | FX | FY | FZ | G | I | J | L |
|---|---|---|---|---|---|---|---|---|---|---|---|---|---|---|---|---|
| MHS4-32D | 44 | 41 | 56 | 8 | 16 | 60 | 68 | 20 | 28 | 23 | 20.5 | 5 | 30.5 | 6 | 20 | $2H9^{+0.025}_{0}$ |
| MHS4-40D | 47 | 44 | 62 | 9 | 17 | 66 | 74 | 24 | 32 | 26.5 | 23.5 | 6 | 32 | 7 | 21 | $3H9^{+0.025}_{0}$ |

| Type | NA | Q | RA | RB | SA | SB | UA | UB | VA | VB | WA | XA | XB |
|---|---|---|---|---|---|---|---|---|---|---|---|---|---|
| MHS4-32D | 14 | 11 | 38 | 25 | 4.5 | 8 | M5×0.8 | 10 | $3H9^{+0.025}_{0}$ | 3 | $34H9^{+0.062}_{0}$ | $3H9^{+0.025}_{0}$ | 3 |
| MHS4-40D | 16 | 12 | 44 | 28 | 5.5 | 9.5 | M6×1 | 12 | $4H9^{+0.030}_{0}$ | 4 | $42H9^{+0.062}_{0}$ | $4H9^{+0.030}_{0}$ | 4 |

#### MHS4-50~63D

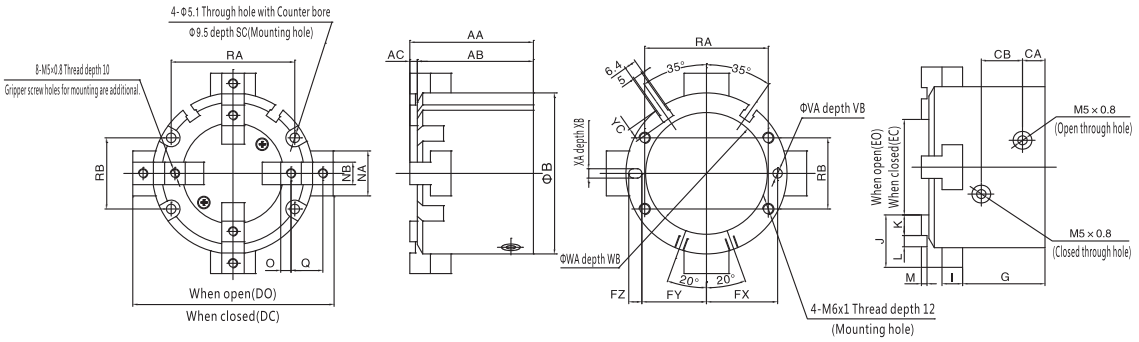


| Type | AA | AB | AC | B | CA | CB | DC | DO | EC | EO | FX | FY | FZ | G | I | J | K | L | M |
|---|---|---|---|---|---|---|---|---|---|---|---|---|---|---|---|---|---|---|---|
| MHS4-50D | 55 | 52 | 3 | 70 | 9 | 20 | 74 | 86 | 26 | 38 | 31 | 28 | 6 | 37.5 | 9 | 24 | 10 | $4H9^{+0.030}_{0}$ | 2 |
| MHS4-63D | 66 | 62 | 4 | 86 | 12 | 22 | 91 | 107 | 35 | 51 | 38 | 34.5 | 7 | 44 | 11 | 28 | 11 | $6H9^{+0.030}_{0}$ | 3 |

| Type | NA | NB | O | Q | RA | RB | SC | VA | VB | WA | WB | XA | XB | YC |
|---|---|---|---|---|---|---|---|---|---|---|---|---|---|---|
| MHS4-50D | 18 | 10h9 | 5 | 14 | 52 | 34 | 12 | $4H9^{+0.030}_{0}$ | 4 | $52H9^{+0.074}_{0}$ | 2 | $4H9^{+0.030}_{0}$ | 4 | 7 |
| MHS4-63D | 24 | 12h9 | 5.5 | 17 | 66 | 38 | 14 | $5H9^{+0.030}_{0}$ | 5 | $65H9^{+0.074}_{0}$ | 2.5 | $5H9^{+0.030}_{0}$ | 5 | 7.5 |

# Clamp Modules Cylinder

## Specification:

| Type | EV-20/75-5 | EV-20/120-5 |
|---|---|---|
| Fluid | Compressed air | |
| Structure Feature | Diaphragm cylinder | |
| Working pressure (Mpa) | 0.5 | |
| Ambient temperature (℃) | -20~40 | |

Note: Various specifications can be customized.

## Product feature:

EV series without piston rod, with diaphragm and a significantly shorter stroke, clamps workpiece with rough surfac quickly ,suitable for all types of attaching & detaching tools. Flat structure and stronge clamp force,especially for slender workpiece. Only work with close fitting the workpiece and with reset function for high speed movement,due to no cushioning.

## Inner structure drawing:

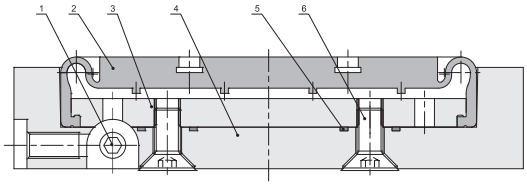


| Number | Name | Number | Name | Number | Name |
|---|---|---|---|---|---|
| 1 | Hexagon socket set screws | 3 | Platen | 5 | O-ring |
| 2 | Membrane | 4 | Cylinder barrel | 6 | Hexagon socket countersunk head screw |

## Accessories mounting type:

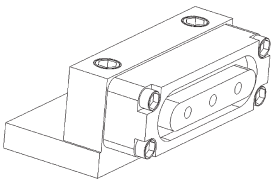

## Mounting type:

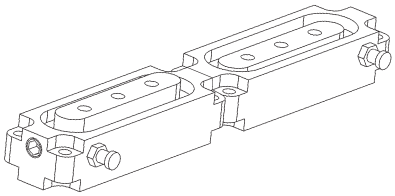

## Clamp Modules Cylinder

### Dimension(mm):

EV-20/75-5

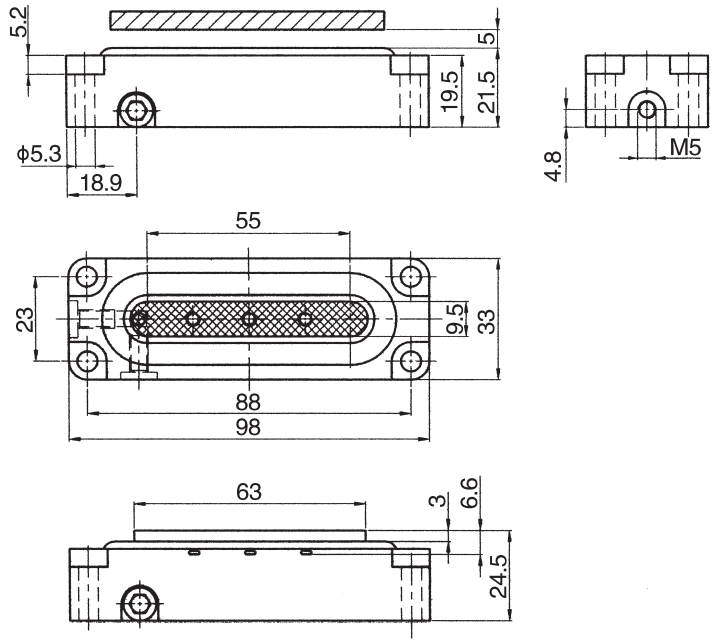


EV-20/120-5

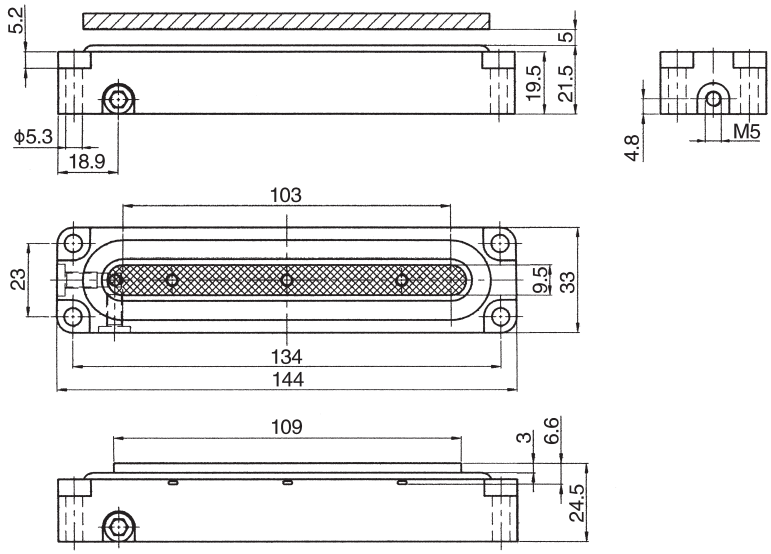

EV

# Magnetic Coupling Rodless Cylinder

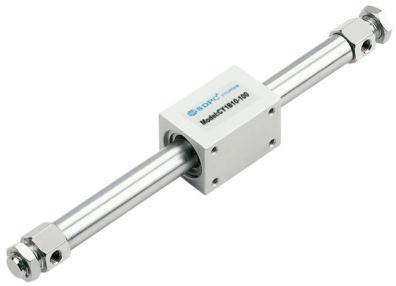

## Specification:

| Type | 16 | 20 | 25 | 32 | 40 |
|---|---|---|---|---|---|
| Motion | Double acting | | | | |
| Fluid | Compressed air | | | | |
| Working pressure (MPa) | 0.15~0.7 | | | | |
| Warrant endure-pressure (MPa) | 1 | | | | |
| Ambient temperature range (℃) | -10~60 | | | | |
| Speed range (mm/s) | 50~400 | | | | |
| Cushion type | Adjustable cushion+fixted bumper | | | | |
| Port size | M5×0.8 | 1/8" | | | 1/4" |
| Safety Retention Force (N) | 140 | 200 | 360 | 550 | 850 |

## Symbol:

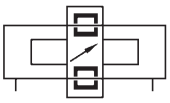

## Product feature:

1. Magnetic coupling rodless cylinder: No mechanica connection between piston and slide block with excellent sealing performance.
2. The action of the piston is transmitted to the external slide blocks through magnetic coupling force without piston rod. The installation space is smaller than ordinary cylinder while the maximum stroke is bigger than ordinary cylinder.
3. Both ends of the cylinder are equipped with adjustable buffer and fixed buffer device. So the reversing action is steady without impact to avoid mechanical damage.
4. The piston chamber separates from slide block to prevent dust and dirt from getting into the system and prolong the service life of the cylinder.

## How to order:

**CY3B R 20×200 LB**

- **Specification**
  - CY3B: Magnetic Coupling Rodless Cylinder
- **Installation type**
  - Blank: Standard type
  - P: Size specification P type
  - F: Size specification F type
- **Bore**

| | |
|---|---|
| Φ6 | Φ32 |
| Φ10 | Φ40 |
| Φ15 | Φ50 |
| Φ20 | Φ63 |
| Φ25 | |

- **Stroke**
- **Mounting type**
  - Blank: No mouting accessories
  - LB: Foot fixed type
  - FA: Flange fixed type

# Magnetic Coupling Rodless Cylinder

## Inner structure drawing:

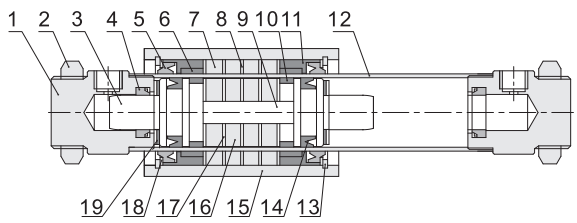


| Number | Name | Number | Name | Number | Name |
|---|---|---|---|---|---|
| 1 | Guide rod end cover | 8 | Magnet spacer | 15 | Body |
| 2 | Nut | 9 | Connecting rod | 16 | Magnet |
| 3 | Piston | 10 | Wearing ring | 17 | Magnet spacer |
| 4 | Buffer sealing ring | 11 | End cover | 18 | Flat washer |
| 5 | Dustproof | 12 | Stainless steel tube | 19 | Fenders |
| 6 | Wearing ring | 13 | Retaining ring for hole | | |
| 7 | Magnet | 14 | Sealing ring | | |

## Dimension(mm):

### CY3B

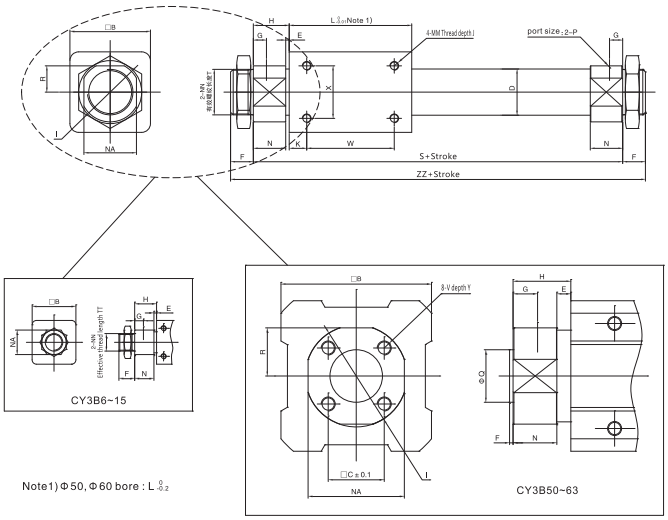


Note1) Φ50, Φ60 bore : L $^{0}_{-0.2}$

### 2 Nuts used for mounting

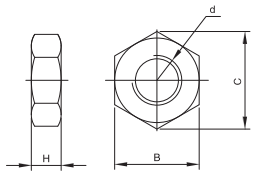

| Type | d | H | B | C |
|---|---|---|---|---|
| CY3B6 | M6×1 | 4 | 8 | 9.2 |
| CY3B10、CY3B15 | M10×1 | 4 | 14 | 16.2 |
| CY3B20 | M20×1.5 | 8 | 26 | 30 |
| CY3B25、CY3B32 | M26×1.5 | 8 | 32 | 37 |
| CY3B40 | M32×2 | 10 | 41 | 47.3 |

| Bore/Symbol | B | C | D | E | F | G | H | I | J | K | L | MM | N | NA |
|---|---|---|---|---|---|---|---|---|---|---|---|---|---|---|
| 6 | 17 | - | 7.6 | 4 | 8 | 5 | 13.5 | - | 4.5 | 5 | 35 | M3X0.5 | 9.5 | 10 |
| 10 | 25 | - | 12 | 1.5 | 9 | 5 | 12.5 | - | 4.5 | 4 | 38 | M3X0.5 | 11 | 14 |
| 15 | 35 | - | 16.6 | 2 | 10 | 5.5 | 13 | - | 6 | 11 | 57 | M4X0.7 | 11 | 17 |
| 20 | 36 | - | 21.6 | 2 | 13 | 7.5 | 20 | 28 | 6 | 8 | 66 | M4X0.7 | 18 | 24 |
| 25 | 46 | - | 26.4 | 2 | 13 | 7.5 | 20.5 | 34 | 8 | 10 | 70 | M5X0.8 | 18.5 | 30 |
| 32 | 60 | - | 33.6 | 2 | 16 | 8 | 22 | 40 | 8 | 15 | 80 | M6X1 | 20 | 36 |
| 40 | 70 | - | 41.6 | 3 | 16 | 11 | 29 | 50 | 10 | 16 | 92 | M6X1 | 26 | 46 |
| 50 | 86 | 32 | 52.4 | 8 | 2 | 14 | 33 | 58 | 12 | 25 | 110 | M8X1.25 | 25 | 55 |
| 63 | 100 | 38 | 65.4 | 8 | 2 | 14 | 33 | 72 | 12 | 26 | 122 | M8X1.25 | 25 | 69 |

| Bore/Symbol | NN | Q | R | S | T | V | W | X | Y | ZZ | P |
|---|---|---|---|---|---|---|---|---|---|---|---|
| 6 | M6X1 | - | - | 62 | 6.5 | - | 25 | 10 | - | 78 | M3X0.5 |
| 10 | M10X1 | - | - | 63 | 7.5 | - | 30 | 16 | - | 81 | M5X0.8 |
| 15 | M10X1 | - | - | 83 | 8 | - | 35 | 19 | - | 103 | M5X0.8 |
| 20 | M20X1.5 | - | 12 | 106 | 10 | - | 50 | 25 | - | 132 | PT1/8 |
| 25 | M26X1.5 | - | 15 | 111 | 10 | - | 50 | 30 | - | 137 | PT1/8 |
| 32 | M26X1.5 | - | 18 | 124 | 13 | - | 50 | 40 | - | 156 | PT1/8 |
| 40 | M32X2 | - | 23 | 150 | 13 | - | 60 | 40 | - | 182 | PT1/4 |
| 50 | - | $30^{-0.007}_{-0.037}$ | 27.5 | 176 | - | M8X1.25 | 60 | 60 | 16 | 180 | PT1/4 |
| 63 | - | $32^{-0.007}_{-0.043}$ | 34.5 | 188 | - | M10X1.5 | 70 | 70 | 16 | 192 | PT1/4 |

# Magnetic Coupling Rodless Cylinder(Guiding Rod Type)

## Specification:

| Type | 15 | 20 | 25 | 32 | 40 |
|---|---|---|---|---|---|
| Motion | Double acting | | | | |
| Fluid | Compressed air | | | | |
| Working pressure (MPa) | 0.18~0.7 | | | | |
| Warrant endure-pressure (MPa) | 1 | | | | |
| Ambient temperature range (℃) | -10~60 | | | | |
| Speed range (mm/s) | 50~400 | | | | |
| Cushion type | Adjustable buffer + oil buffer | | | | |
| Port size | M5×0.8 | 1/8" | | 1/4" | |
| Safety Retention Force (N) | 140 | 200 | 360 | 550 | 850 |

## Symbol:

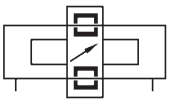

## Product feature:

CY1SG

1. Magnetic coupling rodless cylinder: No mechanica connection between piston and slide block with excellent sealing performance.
2. The action of the piston is transmitted to the external slide blocks through magnetic coupling force without piston rod. The installation space is smaller than ordinary cylinder while the maximum stroke is bigger than ordinary cylinder.
3. Both ends of the cylinder are equipped with adjustable buffer and fixed buffer device. So the reversing action is steady without impact to avoid mechanical damage.
4. The piston chamber separates from slide block to prevent dust and dirt from getting into the system and prolong the service life of the cylinder.
5. With double guiding rod structure and high guiding precision, it can bear a certain lateral or eccentric load.

## How to order:

**CY1SG 20×100 S A**

- Specification: CY1SG: Magnetic Coupling Rodless Cylinder (Guiding Rod Type)
- Bore: Φ15, Φ20, Φ25, Φ32, Φ40
- Stroke
- Magnet code: Blank: without magnet; S: with magnet
- Cushion type: Blank: 2 adjusting screws; A: 2 hydraulic buffer

# Magnetic Coupling Rodless Cylinder(Guiding Rod Type)

## Inner structure drawing:

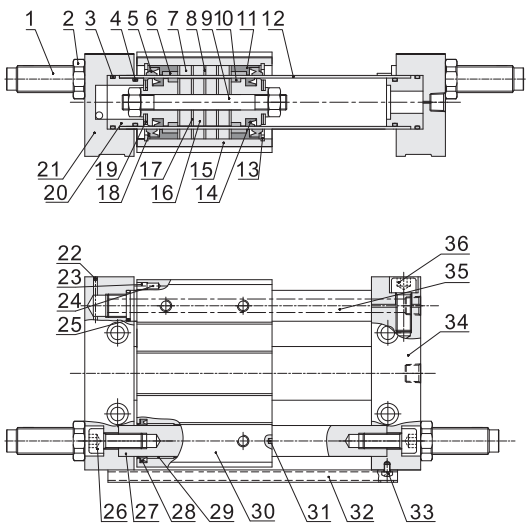


| Number | Name | Number | Name | Number | Name |
|---|---|---|---|---|---|
| 1 | Hydraulic buffer | 13 | Retaining ring for hole | 25 | O-ring |
| 2 | Nut | 14 | Y-ring | 26 | Soket head cap screw |
| 3 | O-ring | 15 | Body | 27 | Guide rod 2 |
| 4 | O-ring | 16 | Magnet | 28 | Dustproof sealing ring |
| 5 | Dustproof | 17 | Magnet spacer | 29 | Bearing |
| 6 | Wearing ring | 18 | Flat washer | 30 | Body |
| 7 | Magnet | 19 | Fenders | 31 | Anti-collision block |
| 8 | Magnet spacer | 20 | End cover | 32 | Inductive switch fixed strip |
| 9 | Connecting rod | 21 | End plate specified on left | 33 | Screw |
| 10 | Wearing ring | 22 | Steel ball | 34 | End plate specified on right |
| 11 | End cover | 23 | Locating gasket | 35 | Guide rod 1 |
| 12 | Stainless steel tube | 24 | Magnet | 36 | Soket head cap screw |

## Dimension(mm):

CY1SG

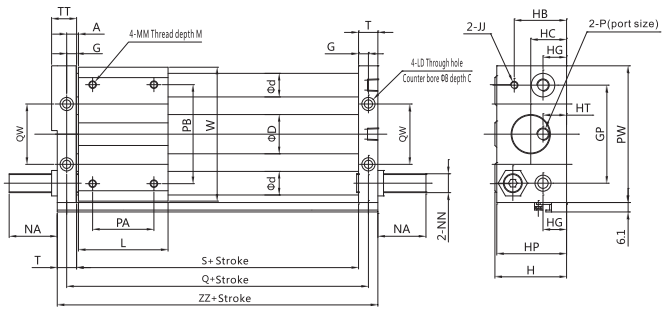


| Bore/Symbol | A | B | C | D | d | G | GP | H | HA | HB | HC | HG | HP | HT | JJ | L |
|---|---|---|---|---|---|---|---|---|---|---|---|---|---|---|---|---|
| 15 | 7.5 | 9.5 | 5.4 | 16.6 | 12 | 6.5 | 52 | 40 | 28 | 29.5 | 20.5 | 15 | 39 | 20.5 | M4X0.7 | 60 |
| 20 | 10 | 9.5 | 5.4 | 21.6 | 16 | 8.5 | 62 | 46 | 36 | 37.5 | 24 | 19 | 45 | 20 | M6X1 | 70 |
| 25 | 10 | 11 | 6.5 | 26.4 | 16 | 8.5 | 70 | 54 | 40.5 | 40.5 | 27.5 | 21.5 | 53 | 21 | M6X1 | 70 |
| 32 | 12.5 | 14 | 8.6 | 33.6 | 20 | 9.5 | 86 | 66 | 50 | 50 | 33 | 26 | 64 | 24 | M8X1.25 | 85 |
| 40 | 12.5 | 14 | 8.6 | 41.6 | 25 | 10.5 | 104 | 76 | 55.5 | 55.5 | 38 | 27 | 74 | 27 | M8X1.25 | 95 |

| Bore/Symbol | LD | M | MM | NA | NN | P | PA | PB | PW | Q | QW | S | T | TT | W | ZZ |
|---|---|---|---|---|---|---|---|---|---|---|---|---|---|---|---|---|
| 15 | 5.8 | 8 | M5X0.8 | 28 | M8X1 | M5X0.8 | 30 | 50 | 75 | 75 | 30 | 62 | 12.5 | 17.5 | 73 | 92 |
| 20 | 5.8 | 10 | M6X1 | 28 | M8X1 | PT1/8" | 40 | 70 | 89 | 90 | 38 | 73 | 16.5 | 21.5 | 87 | 111 |
| 25 | 7 | 10 | M6X1 | 49 | M14X1.5 | PT1/8" | 40 | 70 | 98 | 90 | 42 | 73 | 16.5 | 21.5 | 96 | 111 |
| 32 | 9 | 12 | M8X1.25 | 52 | M20X1.5 | PT1/8" | 40 | 75 | 118 | 110 | 50 | 91 | 18.5 | 24.5 | 116 | 134 |
| 40 | 9 | 12 | M8X1.25 | 51 | M20X1.5 | PT1/4" | 65 | 105 | 141 | 120 | 64 | 99 | 20.5 | 26.5 | 139 | 146 |

# Magnetic Coupling Rodless Cylinder(Accurate Guiding Rod Type)

## Specification:

| Type | 10 | 16 | 20 | 25 | 32 | 40 |
|---|---|---|---|---|---|---|
| Motion | Double acting | | | | | |
| Fluid | Compressed air | | | | | |
| Working pressure (MPa) | 0.18~0.7 | | | | | |
| Warrant endure-pressure (MPa) | 1 | | | | | |
| Ambient temperature range (℃) | -10~60 | | | | | |
| Speed range (mm/s) | 50~400 | | | | | |
| Cushion type | Adjustable buffer + oil buffer | | | | | |
| Port size | M5×0.8 | | 1/8" | | | 1/4" |
| Safety Retention Force (N) | 60 | 140 | 200 | 320 | 550 | 850 |

## Symbol:

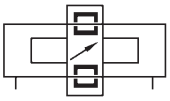

## Product feature:

1. Magnetic coupling rodless cylinder: No mechanical connection between piston and slide block with excellent sealing performance.
2. The action of the piston is transmitted to the external slide blocks through magnetic coupling force without piston rod. The installation space is smaller than ordinary cylinder while the maximum stroke is bigger than ordinary cylinder.
3. Both ends of the cylinder are equipped with adjustable buffer and fixed buffer device. So the reversing action is steady without impact to avoid mechanical damage.
4. The piston chamber separates from slide block to prevent dust and dirt from getting into the system and prolong the service life of the cylinder.
5. With double guiding rod structure and high guiding precision, it can bear a certain lateral or eccentric load.

## How to order:

**RMTL 20×100 S A**

- Specification
  - CY1SG: Magnetic Coupling Rodless Cylinder (Accurate Guiding Rod Type)
- Bore
  - Φ10
  - Φ16
  - Φ20
  - Φ25
  - Φ32
  - Φ40
- Stroke
- Magnet code
  - Blank: without magnet
  - S: with magnet
- Cushion type
  - Blank: 2 adjusting screws
  - A: 2 hydraulic buffer

# Magnetic Coupling Rodless Cylinder(Accurate Guiding Rod Type)

## Inner structure drawing:

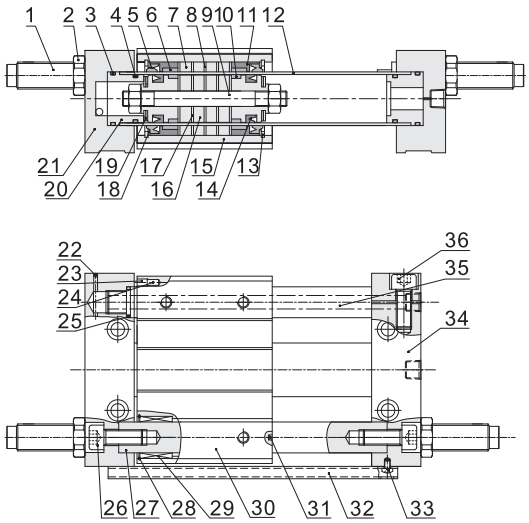


| Number | Name | Number | Name | Number | Name |
|---|---|---|---|---|---|
| 1 | Hydraulic buffer | 13 | Retaining ring for hole | 25 | O-ring |
| 2 | Nut | 14 | Y-ring | 26 | Soket head cap screw |
| 3 | O-ring | 15 | Body | 27 | Guide rod 2 |
| 4 | O-ring | 16 | Magnet | 28 | Dustproof sealing ring |
| 5 | Dustproof | 17 | Magnet spacer | 29 | Bearing |
| 6 | Wearing ring | 18 | Flat washer | 30 | Body |
| 7 | Magnet | 19 | Fenders | 31 | Anti-collision block |
| 8 | Magnet spacer | 20 | End cover | 32 | Inductive switch fixed strip |
| 9 | Connecting rod | 21 | End plate specified on left | 33 | Screw |
| 10 | Wearing ring | 22 | Steel ball | 34 | End plate specified on right |
| 11 | End cover | 23 | Locating gasket | 35 | Guide rod 1 |
| 12 | Stainless steel tube | 24 | Magnet | 36 | Soket head cap screw |

## Dimension(mm):

Φ10~Φ40

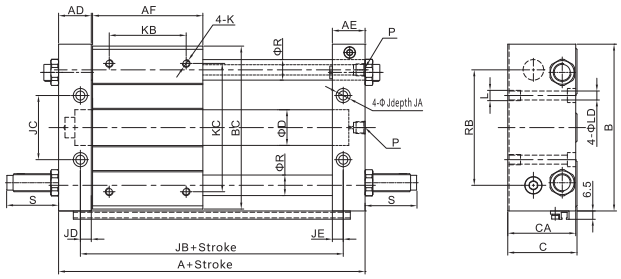


| Bore/Symbol | A | AD | AE | AF | B | BC | C | CA | D | J | JA | JB | JC | JD | JE |
|---|---|---|---|---|---|---|---|---|---|---|---|---|---|---|---|
| 10 | 111 | 20.5 | 20.5 | 68 | 80 | 77 | 34 | 33 | 11.2 | 8 | 4 | 85 | 26 | 7.5 | 7.5 |
| 16 | 122 | 22.5 | 22.5 | 75 | 95 | 92 | 40 | 39 | 18 | 9.5 | 5 | 90 | 30 | 6.5 | 6.5 |
| 20 | 139 | 25.5 | 25.5 | 86 | 120 | 117 | 46 | 45 | 22.8 | 9.5 | 5 | 105 | 40 | 8.5 | 8.5 |
| 25 | 139 | 25.5 | 25.5 | 86 | 130 | 127 | 54 | 53 | 27.8 | 11 | 6.5 | 105 | 50 | 8.5 | 8.5 |
| 32 | 159 | 28.5 | 28.5 | 100 | 160 | 157 | 66 | 64 | 35 | 14 | 8 | 121 | 60 | 9.5 | 9.5 |
| 40 | 209 | 35.5 | 33.5 | 136 | 190 | 187 | 78 | 74 | 43 | 14 | 8 | 159 | 84 | 10.5 | 10.5 |

| Bore/Symbol | K | KB | KC | L | LD | P | R | RB | S |
|---|---|---|---|---|---|---|---|---|---|
| 10 | M4×0.7depth8 | 30 | 60 | M5×0.8depth9.5 | 4.5 | M5×0.8 | 10 | 52 | 16.5 |
| 16 | M5×0.8depth10 | 45 | 70 | M6×1.0depth9.5 | 5.5 | M5×0.8 | 12 | 65 | 14.5 |
| 20 | M6×1.0depth10 | 50 | 90 | M6×1.0depth9.5 | 5.5 | PT1/8" | 16 | 80 | 21.5 |
| 25 | M6×1.0depth10 | 60 | 100 | M8×1.25depth10 | 7 | PT1/8" | 16 | 90 | 39.5 |
| 32 | M8×1.25depth12 | 70 | 120 | M10×1.5depth15 | 8.5 | PT1/8" | 20 | 110 | 57.5 |
| 40 | M8×1.25depth12 | 90 | 140 | M10×1.5depth15 | 8.5 | PT1/4" | 25 | 130 | 49.5 |

# Screw Thread Cylinder

## Specification:

| type | 6 | 8 | 10 | 16 |
|---|---|---|---|---|
| Motion | Single acting type | | | |
| Fluit | Compressed air | | | |
| Stroke | 5,10,15 | | | |
| Working pressure (MPa) | 0.2~0.8 | | | |
| Ambient temperature (℃) | -10~60 | | | |
| Port size | M5×0.8 | | | |

## How to order:

**LWD 6×10 M**

- Specification: LWD: Screw Thread Cylinder
- Bore: Φ6, Φ8, Φ10, Φ16
- Stroke: 5, 10, 15
- Screw thread type: M: top of piston with screw thread; blank: top of piston without screw thread

## Symbol:

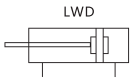

LWD

## Product feature:

1. With the whole cylinder body surface attaching screw thread, it can be adapt to various occations.
2. This series cylinders are especially suitable for the functions of clamping, fixing, limiting and positioning.
3. Adjusting the screw–in depth can change the stroke terminal position of the cylinder.

## Inner structure drawing:

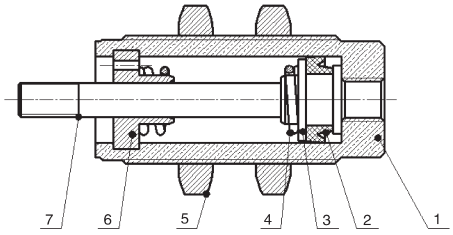


| Number | Name |
|---|---|
| 1 | Cu tube with nickel |
| 2 | NBR Y-ring |
| 3 | AL piston |
| 4 | Stainless steel spring |
| 5 | steel screw cap with nickel |
| 6 | Cu axial with nickel |
| 7 | Stainless steel piston rod |

## Dimension(mm):

LWD Dimension

■ Φ12~Φ16

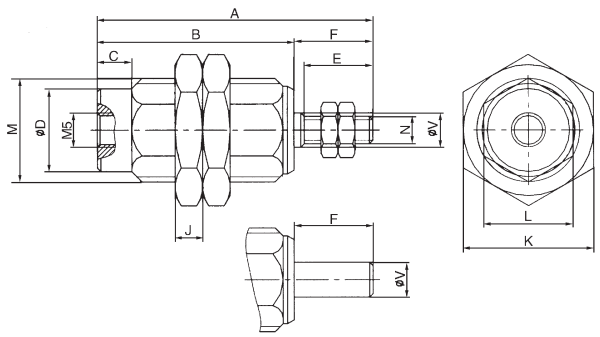


| Type | A | B | C | D | E | F | J | K | L | M | N | V |
|---|---|---|---|---|---|---|---|---|---|---|---|---|
| LWD6×5 | 29.5 | 21 | 4 | 8.5 | 7 | 8.5 | 3 | 14 | 9 | M10×1 | M3×0.5 | 3 |
| LWD6×10 | 34.5 | 26 | 4 | 8.5 | 7 | 8.5 | 3 | 14 | 9 | M10×1 | M3×0.5 | 3 |
| LWD6×15 | 41.5 | 33 | 4 | 8.5 | 7 | 8.5 | 3 | 14 | 9 | M10×1 | M3×0.5 | 3 |
| LWD8×5 | 31 | 21 | 4 | 10 | 7 | 10 | 3.2 | 14 | 11 | M12×1 | M4×0.7 | 5 |
| LWD8×10 | 39 | 29 | 4 | 10 | 7 | 10 | 3.2 | 14 | 11 | M12×1 | M4×0.7 | 5 |
| LWD8×15 | 44 | 34 | 4 | 10 | 7 | 10 | 3.2 | 14 | 11 | M12×1 | M4×0.7 | 5 |
| LWD10×5 | 35 | 23.5 | 5 | 12 | 10 | 11.5 | 4 | 19 | 13 | M15×1.5 | M4×0.7 | 5 |
| LWD10×10 | 40 | 28.5 | 5 | 12 | 10 | 11.5 | 4 | 19 | 13 | M15×1.5 | M4×0.7 | 5 |
| LWD10×15 | 47 | 35.5 | 5 | 12 | 10 | 11.5 | 4 | 19 | 13 | M15×1.5 | M4×0.7 | 5 |
| LWD16×5 | 38 | 23 | 7 | 19.5 | 12 | 15 | 5 | 27 | 20 | M22×1.5 | M5×0.8 | 6 |
| LWD16×10 | 48.5 | 33.5 | 7 | 19.5 | 12 | 15 | 5 | 27 | 20 | M22×1.5 | M5×0.8 | 6 |
| LWD16×15 | 53.5 | 38.5 | 7 | 19.5 | 12 | 15 | 5 | 27 | 20 | M22×1.5 | M5×0.8 | 6 |

# Mini Cylinder

## Specification:

| type | 4 | 6 | 10 |
|---|---|---|---|
| Motion | Single acting type | | |
| Fluit | Compressed air | | |
| Stroke | 5,10,15 | | |
| Working pressure (MPa) | 0.15~0.7 | | |
| Speed range (mm/s) | 50~500 | | |
| Ambient temperature(℃) | -10~70 | | |
| Port size | M5 | | |

## How to order:

**SZW 4 × 10**

- Specification: SZW: Mini Cylinder
- Bore: Φ4 / Φ6 / Φ10
- Stroke: 5 / 10 / 15

## Product feature:

1. Adopt Stainless steel tube,light ,precise,friction &corrosion endurable.
2. Use imported non–lubrication oil seal, fits for high speed movement.
3. Tube and covers made by roll extrusion.
4. Unique design and assembly warrant its in line.

## Dimension(mm):

SZW4 × Stroke(5、10mm)

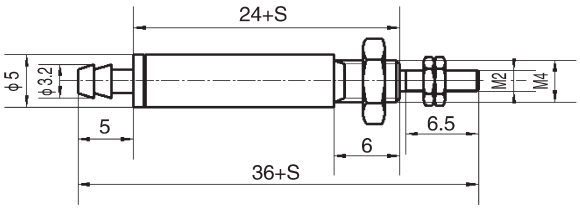


SZW6~10 × Stroke(5、10、15mm)

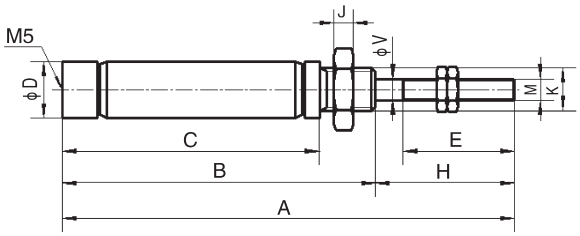


| Bore/symbol | A | B | C | D | E | H | J | K | M | V |
|---|---|---|---|---|---|---|---|---|---|---|
| SZW6X10 | 65 | 45 | 37 | 8 | 16 | 20 | 4.5 | M6 | M3 | 3 |
| SZW6X15 | 70 | 50 | 42 | 8 | 16 | 20 | 4.5 | M6 | M3 | 3 |
| SZW10X10 | 74 | 54 | 46 | 11 | 15 | 20 | 3 | M8X1 | M4 | 4 |
| SZW10X15 | 79 | 59 | 51 | 11 | 15 | 20 | 3 | M8X1 | M4 | 4 |

# Air Oil Pressure Transition Cylinder

## Specification:

| Type | KZ |
|---|---|
| Motion | Single acting type |
| Bore | Φ63、Φ80、Φ100 |
| Fluid | ISOVG32 |
| Working pressure(Mpa) | 0.07~0.99 |
| Resistance (MPa) | 1.5 |
| Ambient temperature(℃) | -10~70 |

## How to order:

**KZ 80 x 100 LB**

- Specification: KZ: Air Oil Pressure Transition Cylinder
- Bore: Φ63 / Φ80 / Φ100
- Length: 50~250mm / 100~300mm
- Mounting type: LB: Foot bracket / FB: Rear flanges

## Product feature:

1. Provide a simple source of power for low pressure hydraulic cylinders.
2. Suitable for slow, stable movement.
3. The tanks must be mounted vertically at the highest point of the circuit.
4. Fill oil into the tanks not over 80% of the full volume.
5. Flow controls are recommended to avoid excessive foaming in tanks.

KZ

## Optional:

| Bore | | Φ63 | | | | | | Φ80 | | | | | | Φ100 | | | | | |
|---|---|---|---|---|---|---|---|---|---|---|---|---|---|---|---|---|---|---|---|
| Length(x) | | 50 | 75 | 125 | 150 | 200 | 250 | 110 | 125 | 150 | 200 | 250 | 300 | 100 | 125 | 150 | 200 | 250 | 300 |
| cylinder stroke range | | | | | | | | | | | | | | | | | | | |
| Bore | Φ40 | 100 under | 101~125 | 101~150 | 151~200 | | 251~300 | 201~250 | | 301~350 | | | | | | | | | |
| | Φ50 | 50 under | 75 under | 51~100 | | | 151~200 | 101~150 | | | 251~300 | | | 201~250 | | | | | |
| | Φ63 | | 50 under | | 75 under | | | 51~100 | | 101~150 | | | 201~250 | | 151~200 | 251~300 | | | |
| | Φ80 | | | | 50 under | | | | 75 under | | | | 101~150 | 51~100 | | | | 101~150 | 151~200 |
| | Φ100 | | | | | | | | 50 under | | | | 51~100 | | | | | | 101~150 |

## Dimension(mm):

Foot brcket(LB)

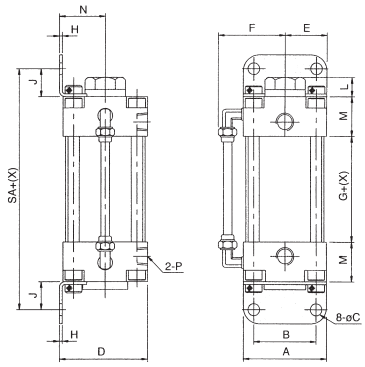


| Bore | A | B | C | D | E | F | G | H | J | L | M | N | P | S |
|---|---|---|---|---|---|---|---|---|---|---|---|---|---|---|
| Φ63 | 80 | 56 | 12 | 79 | 37.5 | 56.5 | 32 | 3.2 | 31 | 14 | 32 | 41 | PT3/8" | 12 |
| Φ80 | 97 | 70 | 14 | 96 | 47 | 69 | 39 | 4 | 30 | 15 | 36 | 49 | PT3/8" | 12 |
| Φ100 | 112 | 85 | 14 | 114 | 56.6 | 76.5 | 39 | 4 | 30 | 15.5 | 36 | 57 | PT1/2" | 12 |

Rear flanges(FB)

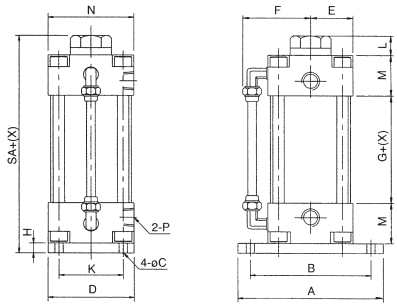


| Bore | A | B | C | D | E | F | G | H | J | L | M | N | P | S |
|---|---|---|---|---|---|---|---|---|---|---|---|---|---|---|
| Φ63 | 120 | 100 | 9 | 80 | 37.5 | 56.5 | 32 | 3.2 | 31 | 14 | 32 | 41 | PT3/8" | 12 |
| Φ80 | 154 | 126 | 12 | 96 | 47 | 69 | 39 | 4 | 30 | 15 | 36 | 49 | PT3/8" | 12 |
| Φ100 | 180 | 150 | 14 | 120 | 56.5 | 76.5 | 39 | 4 | 30 | 15.5 | 36 | 57 | PT1/2" | 12 |

# Air–oil Power Cylinder

## Operational principle:

BS series air–oil power cylinder,drives by pure air pressure.Use scale of sectional area which from big and small piston,converts the low air pressure to high pressure oil,the output rate of supercharging reach around 25:1. Mainly for stamping work,such as stamping,riveting,bending and so on.

## Characteristic:

- The speed of pneumatic system and stability of hydraulic system integrates air–oil power cylinder
- Driven by pressured air ,produce power 1–40T
- Without shake and noise when working,improves quality of workpiece and life of mold.
- Design to save energy when continue pressure or stop action,not like pure hydraulic system
- Simple device,easy to control and maintain.
- Driven by pneumatic source,clean working environment,servicing easily.
- Simple and light,easy to handle.
- Stroke of capacity is limited
- Mainly for stamping work,such as bending,shear,pulling,riveting, marking and pressure assembly etc.

## Installation and maintenance:

- Adopt multi–directional mounting,general use flange mounting,power axis is downward
- In using,the piston should avoids big radial load
- After install,run 2–3times in the work pressure range and without load
- The power source from filter of compressed dry air,pressure about 2–7kg/cm2
- The temperature range is –5~+60C for air–oil power cylinder,special requirements with OEM.
- It will be loss power oil after use of long–term,it need add in time.

BS

## Instructions:

Compressed Air

Hydraulic Fluid

First step:Preloading

N1 Admission air
M1 Fall
N4 Exhaust air

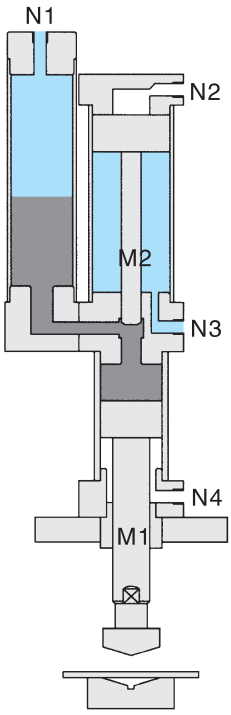


Second step:Boost

N2 Admission air
M2 fall boost
N3 Exhaust air

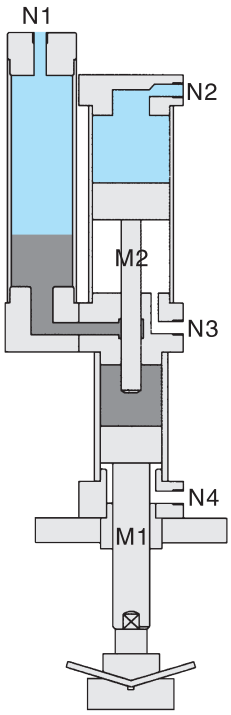


Third step:Reset

N3 N4 Admission air
M1 M2 Reset
N1 N2 Exhaust air

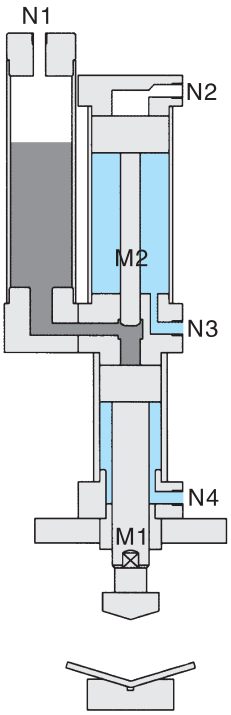

Air–oil Power Cylinder

## Recommend circuit diagram for standard air–oil power pressure

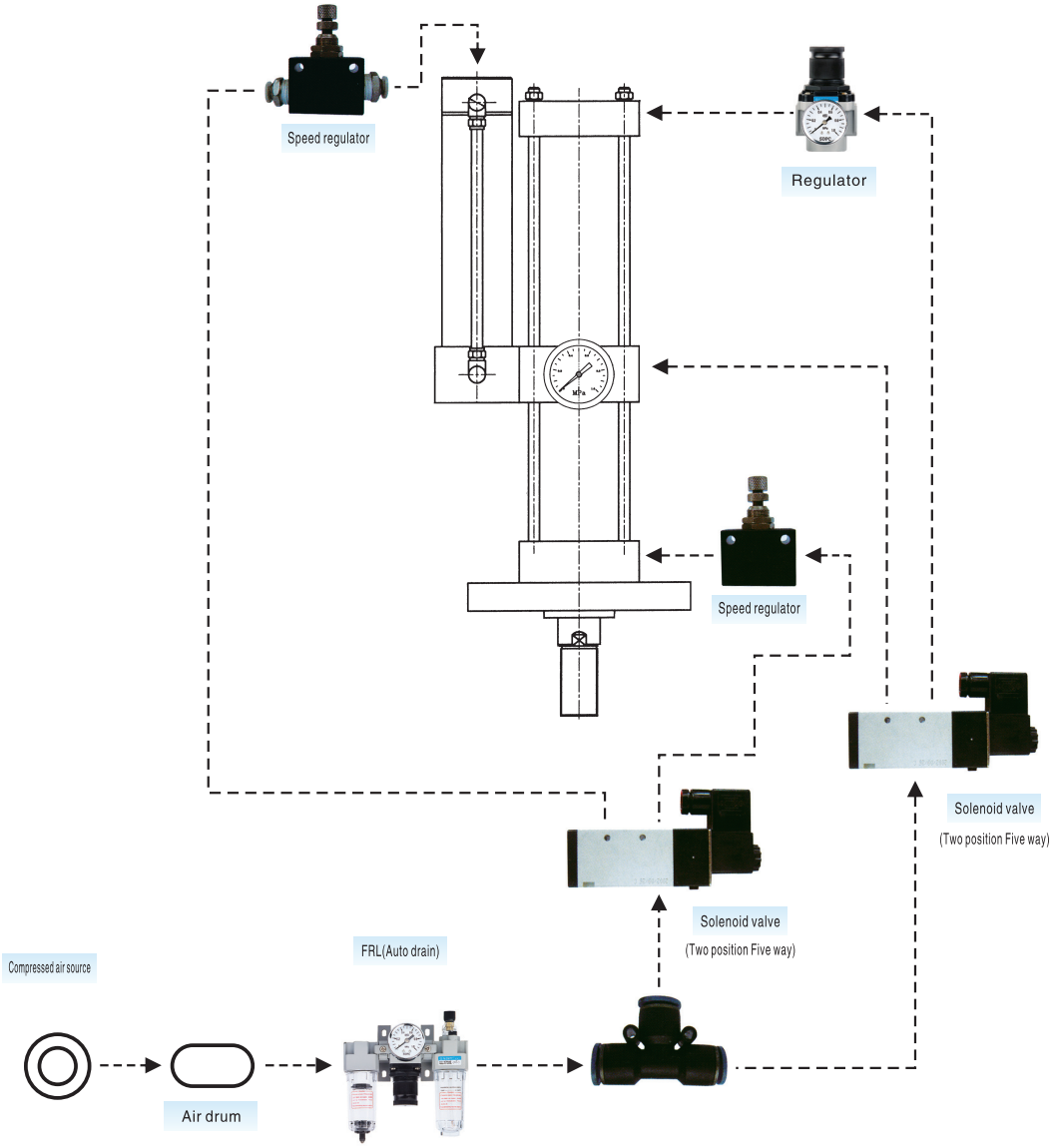

# Air–oil Power Cylinder

## Dimension(mm):

Standard

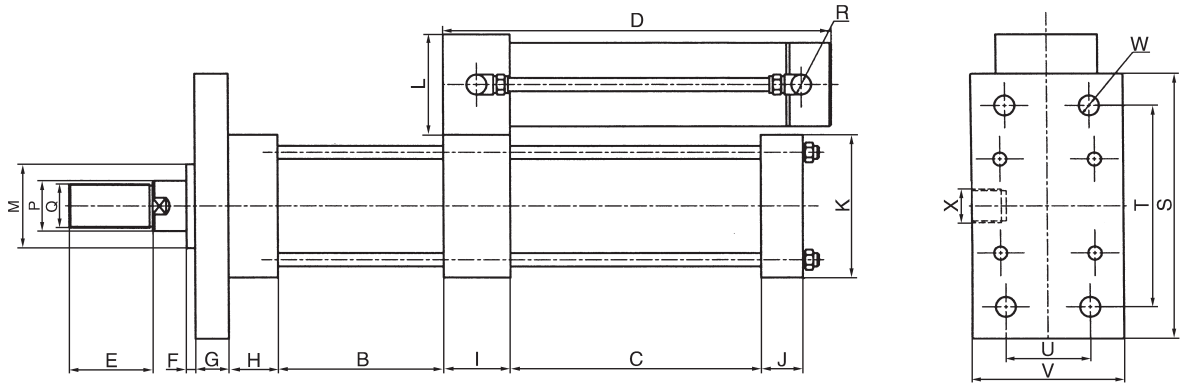


| Inner diameter of oil cylinder(T) | E | F | G | H | I | J | K | L | M | N | P | Q | R | S | T | U | V | W | X |
|---|---|---|---|---|---|---|---|---|---|---|---|---|---|---|---|---|---|---|---|
| 50(1T) | 50 | 5 | 20 | 30 | 30 | 25 | 85×85 | 60×60 | Φ50 | 75 | Φ30 | M26×1.5 | G1/4" | 156 | 120 | 90 | 50 | Φ12 | G1/4" |
| 63(3T) | 50 | 5 | 20 | 35 | 40 | 25 | 100×100 | 69×69 | Φ55 | 75 | Φ35 | M30×1.5 | G3/8" | 190 | 150 | 105 | 65 | Φ14 | G3/8" |
| 80(5T) | 50 | 5 | 20 | 35 | 40 | 25 | 114×114 | 90×90 | Φ55 | 90 | Φ35 | M30×1.5 | G3/8" | 220 | 170 | 120 | 70 | Φ16 | G3/8" |
| 100(10T) | 55 | 5 | 25 | 40 | 40 | 30 | 140×140 | 112×112 | Φ65 | 90 | Φ45 | M40×2 | G1/2" | 250 | 200 | 145 | 80 | Φ20 | G1/2" |
| 100(13T) | 55 | 5 | 25 | 40 | 40 | 30 | 140×140 | 112×112 | Φ65 | 90 | Φ45 | M40×2 | G1/2" | 250 | 200 | 145 | 80 | Φ20 | G1/2" |
| 125(15T) | 55 | 5 | 25 | 40 | 50 | 30 | 180×180 | 112×112 | Φ80 | 90 | Φ60 | M50×2 | G1/2" | 320 | 250 | 190 | 120 | Φ22 | G1/2" |
| 125(20T) | 55 | 5 | 25 | 40 | 50 | 30 | 180×180 | 112×112 | Φ80 | 90 | Φ60 | M50×2 | G1/2" | 320 | 250 | 190 | 120 | Φ22 | G1/2" |
| 160(30T) | 55 | 5 | 30 | 40 | 60 | 40 | 210×210 | 140×140 | Φ100 | 90 | Φ60 | M63×2 | G3/4" | 355 | 290 | 218 | 140 | Φ30 | G3/4" |
| 160(40T) | 55 | 5 | 40 | 40 | 60 | 40 | 250×250 | 140×140 | Φ100 | 90 | Φ80 | M63×2 | G3/4" | 390 | 320 | 240 | 160 | Φ35 | G3/4" |

| Tonnage | TTL stroke | Boost stroke | A | B | C | D | TTL stroke | Boost stroke | A | B | C | D | TTL stroke | Boost stroke | A | B | C | D | TTL stroke | Boost stroke | A | B | C | D |
|---|---|---|---|---|---|---|---|---|---|---|---|---|---|---|---|---|---|---|---|---|---|---|---|---|
| 1T | 50 | 5 | 350 | 105 | 110 | 260 | 100 | 5 | 400 | 105 | 110 | 310 | 155 | 5 | 450 | 205 | 110 | 360 | 100 | 5 | 500 | 255 | 110 | 410 |
| | | 10 | 400 | | 160 | | | 10 | 450 | | 160 | | | 10 | 500 | | 160 | | | 10 | 550 | | 160 | |
| | | 15 | 450 | | 210 | | | 15 | 500 | | 210 | | | 15 | 550 | | 210 | | | 15 | 600 | | 210 | |
| | | 20 | 500 | | 260 | | | 20 | 550 | | 260 | | | 20 | 600 | | 260 | | | 20 | 650 | | 260 | |
| 3T | 50 | 5 | 360 | 110 | 110 | 260 | 100 | 5 | 410 | 110 | 110 | 310 | 160 | 5 | 460 | 210 | 110 | 360 | 200 | 5 | 510 | 260 | 110 | 410 |
| | | 10 | 410 | | 160 | | | 10 | 460 | | 160 | | | 10 | 510 | | 160 | | | 10 | 560 | | 160 | |
| | | 15 | 460 | | 210 | | | 15 | 510 | | 210 | | | 15 | 560 | | 210 | | | 15 | 610 | | 210 | |
| | | 20 | 510 | | 260 | | | 20 | 560 | | 260 | | | 20 | 610 | | 260 | | | 20 | 660 | | 260 | |
| 5T | 50 | 5 | 380 | 110 | 130 | 290 | 100 | 5 | 430 | 110 | 130 | 340 | 160 | 5 | 480 | 210 | 130 | 390 | 200 | 5 | 500 | 260 | 130 | 440 |
| | | 10 | 445 | | 195 | | | 10 | 495 | | 195 | | | 10 | 545 | | 195 | | | 10 | 550 | | 195 | |
| | | 15 | 510 | | 260 | | | 15 | 560 | | 260 | | | 15 | 610 | | 260 | | | 15 | 600 | | 260 | |
| | | 20 | 575 | | 325 | | | 20 | 625 | | 325 | | | 20 | 675 | | 325 | | | 20 | 650 | | 325 | |
| 10T | 50 | 5 | 360 | 125 | 130 | 295 | 100 | 5 | 465 | 125 | 130 | 345 | 175 | 5 | 515 | 225 | 130 | 395 | 200 | 5 | 565 | 275 | 130 | 445 |
| | | 10 | 410 | | 195 | | | 10 | 530 | | 195 | | | 10 | 580 | | 195 | | | 10 | 630 | | 195 | |
| | | 15 | 460 | | 260 | | | 15 | 595 | | 260 | | | 15 | 645 | | 260 | | | 15 | 695 | | 260 | |
| | | 20 | 510 | | 325 | | | 20 | 660 | | 325 | | | 20 | 710 | | 325 | | | 20 | 760 | | 325 | |
| 13T | 50 | 5 | 430 | 125 | 145 | 295 | 100 | 5 | 480 | 125 | 145 | 310 | 175 | 5 | 530 | 225 | 145 | 395 | 200 | 5 | 580 | 275 | 145 | 445 |
| | | 10 | 510 | | 225 | | | 10 | 560 | | 225 | | | 10 | 610 | | 225 | | | 10 | 660 | | 225 | |
| | | 15 | 590 | | 308 | | | 15 | 640 | | 305 | | | 15 | 690 | | 305 | | | 15 | 740 | | 305 | |
| | | 20 | 670 | | 385 | | | 20 | 720 | | 385 | | | 20 | 770 | | 385 | | | 20 | 820 | | 385 | |
| 15T | 50 | 5 | 443 | 130 | 138 | 295 | 100 | 5 | 493 | 130 | 138 | 345 | 180 | 5 | 543 | 230 | 138 | 395 | 200 | 5 | 593 | 280 | 138 | 445 |
| | | 10 | 508 | | 203 | | | 10 | 558 | | 203 | | | 10 | 608 | | 203 | | | 10 | 658 | | 203 | |
| | | 15 | 573 | | 268 | | | 15 | 623 | | 268 | | | 15 | 673 | | 268 | | | 15 | 723 | | 268 | |
| | | 20 | 638 | | 333 | | | 20 | 668 | | 333 | | | 20 | 738 | | 333 | | | 20 | 788 | | 333 | |
| 20T | 50 | 5 | 468 | 130 | 163 | 295 | 100 | 5 | 518 | 130 | 163 | 345 | 180 | 5 | 568 | 230 | 163 | 395 | 200 | 5 | 618 | 280 | 163 | 445 |
| | | 10 | 558 | | 253 | | | 10 | 608 | | 253 | | | 10 | 658 | | 253 | | | 10 | 708 | | 253 | |
| | | 15 | 648 | | 343 | | | 15 | 698 | | 343 | | | 15 | 748 | | 343 | | | 15 | 798 | | 343 | |
| | | 20 | 738 | | 433 | | | 20 | 788 | | 433 | | | 20 | 838 | | 433 | | | 20 | 888 | | 433 | |
| 30T | 50 | 5 | 526 | 130 | 191 | 300 | 100 | 5 | 576 | 130 | 191 | 350 | 180 | 5 | 626 | 230 | 191 | 400 | 200 | 5 | 676 | 280 | 191 | 450 |
| | | 10 | 631 | | 296 | | | 10 | 681 | | 296 | | | 10 | 731 | | 296 | | | 10 | 781 | | 296 | |
| | | 15 | 738 | | 401 | | | 15 | 786 | | 401 | | | 15 | 836 | | 401 | | | 15 | 886 | | 401 | |
| | | 20 | 841 | | 506 | | | 20 | 891 | | 506 | | | 20 | 941 | | 506 | | | 20 | 991 | | 506 | |
| 40T | 50 | 5 | 536 | 130 | 191 | 300 | 100 | 5 | 586 | 130 | 191 | 350 | 180 | 5 | 636 | 230 | 191 | 400 | 200 | 5 | 686 | 280 | 191 | 450 |
| | | 10 | 641 | | 296 | | | 10 | 691 | | 296 | | | 10 | 741 | | 296 | | | 10 | 791 | | 296 | |
| | | 15 | 746 | | 401 | | | 15 | 796 | | 401 | | | 15 | 846 | | 401 | | | 15 | 896 | | 401 | |
| | | 20 | 851 | | 506 | | | 20 | 901 | | 506 | | | 20 | 951 | | 506 | | | 20 | 1001 | | 506 | |

BS

Air–oil Power Cylinder

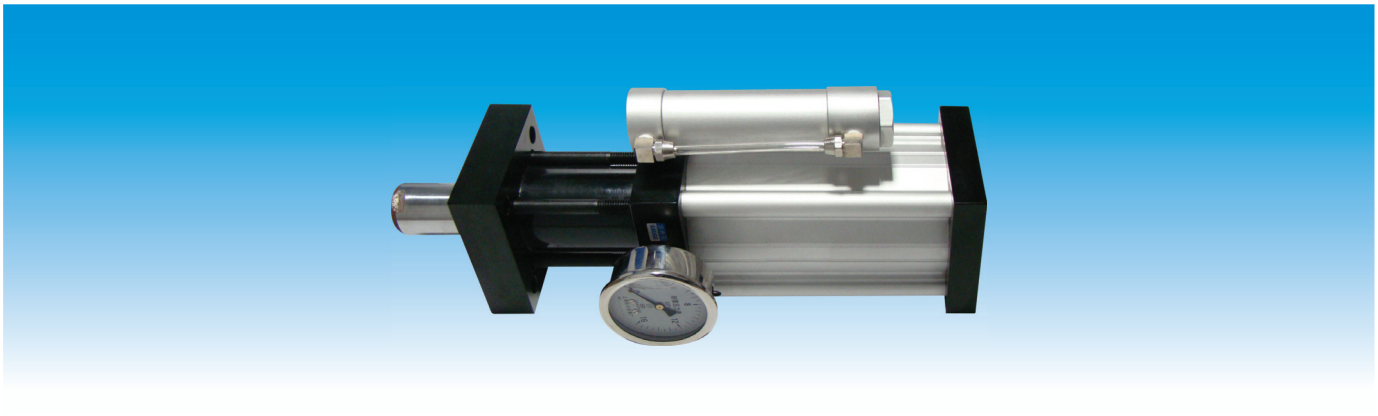

## Recommend circuit diagram for vertical compression air–oil power pressure

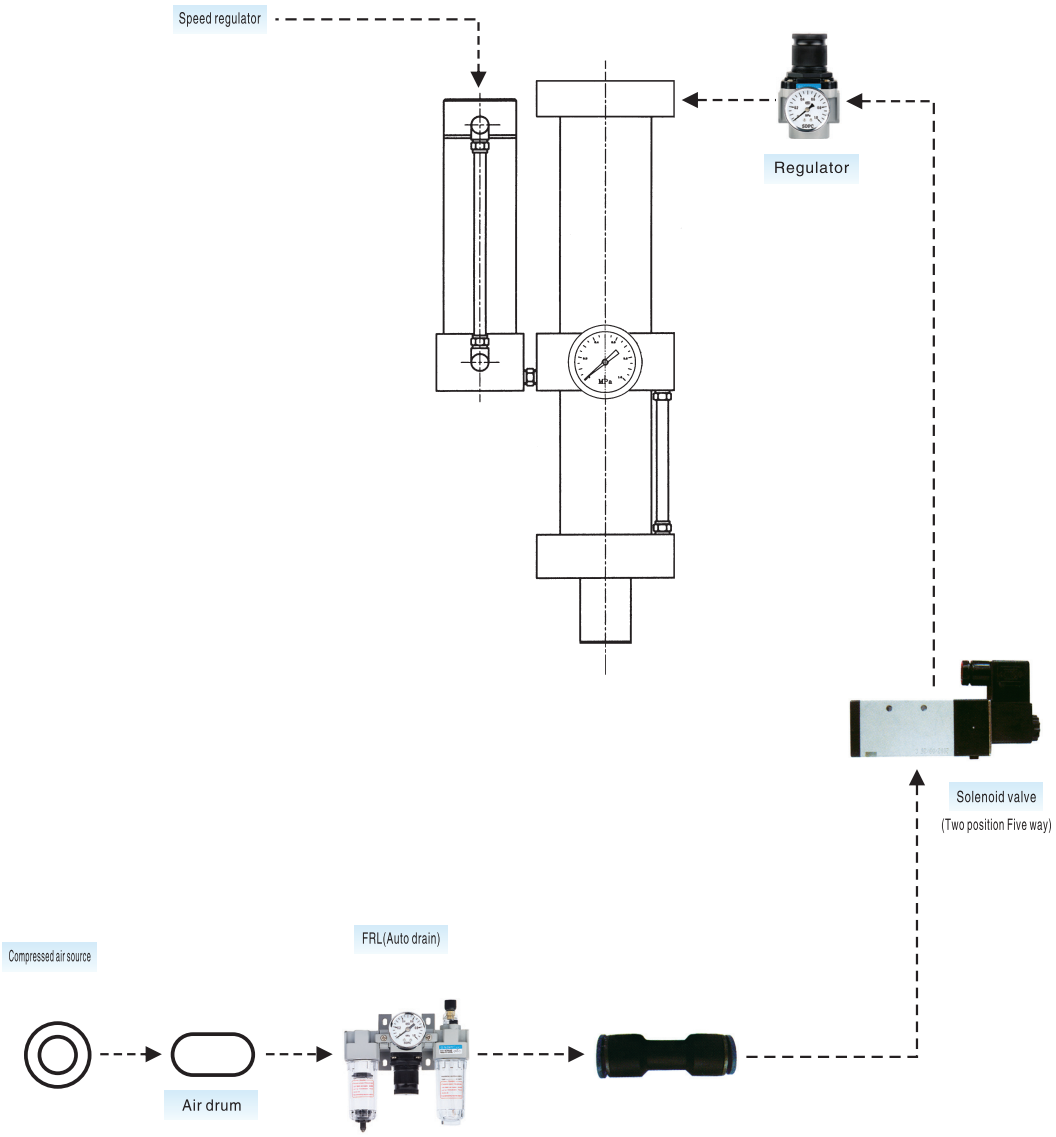

# Air–oil Power Cylinder

## Dimension(mm):

Vertical compression

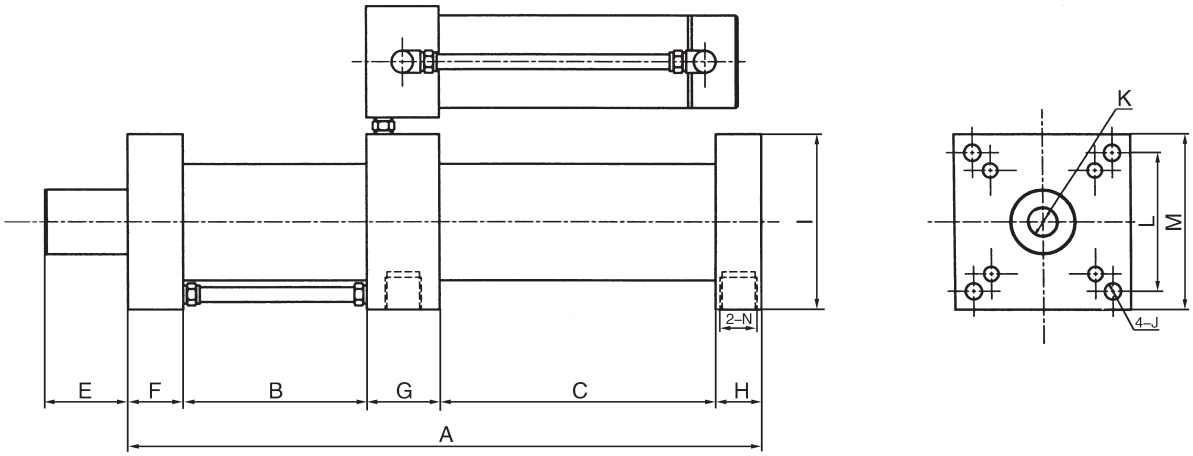


| Inner diameter of oil cylinder(T) | E | F | G | H | I | J | K | L | M | N |
|---|---|---|---|---|---|---|---|---|---|---|
| 50(1T) | 50 | 30 | 30 | 20 | 95×95 | Φ9 | M16 depth 25 | 75×75 | 95×95 | G1/4" |
| 50(2T) | 50 | 30 | 30 | 20 | 95×95 | Φ9 | M16 depth 25 | 75×75 | 95×95 | G1/4" |
| 63(3T) | 50 | 30 | 30 | 20 | 114×114 | Φ11 | M16 depth 25 | 92×92 | 114×114 | G1/4" |
| 63(5T) | 50 | 30 | 30 | 20 | 114×114 | Φ11 | M16 depth 25 | 92×92 | 114×114 | G1/4" |
| 80(5T) | 50 | 40 | 40 | 30 | 140×140 | Φ13 | M16 depth 25 | 110×110 | 140×140 | G3/8" |

| Tonnage | Boost stroke | A | B | C | Tonnage | Boost stroke | A | B | C | Tonnage | Boost stroke | A | B | C | Tonnage | Boost stroke | A | B | C | Tonnage | Boost stroke | A | B | C |
|---|---|---|---|---|---|---|---|---|---|---|---|---|---|---|---|---|---|---|---|---|---|---|---|---|
| 1T | 5 | 231 | 60 | 91 | 2T | 5 | 241 | 60 | 101 | 3T | 5 | 251 | 65 | 106 | 5T | 5 | 275 | 65 | 130 | 8T | 5 | 306 | 65 | 131 |
| | 10 | 261 | 65 | 116 | | 10 | 286 | 65 | 141 | | 10 | 296 | 70 | 146 | | 10 | 375 | 105 | 190 | | 10 | 401 | 95 | 196 |
| | 15 | 291 | 70 | 141 | | 15 | 356 | 90 | 181 | | 15 | 366 | 100 | 186 | | 15 | 495 | 165 | 250 | | 15 | 531 | 160 | 261 |
| | 20 | 326 | 80 | 166 | | 20 | 436 | 135 | 221 | | 20 | 446 | 140 | 226 | | 20 | 615 | 225 | 310 | | 20 | 661 | 225 | 326 |

## Air–oil Power Cylinder

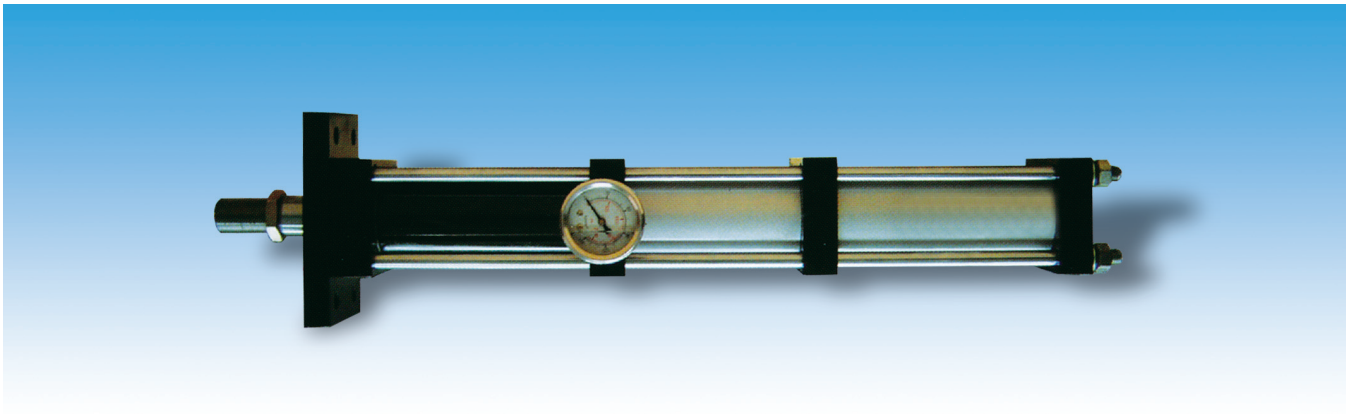

## Recommend circuit diagram for built–in air–oil power pressure

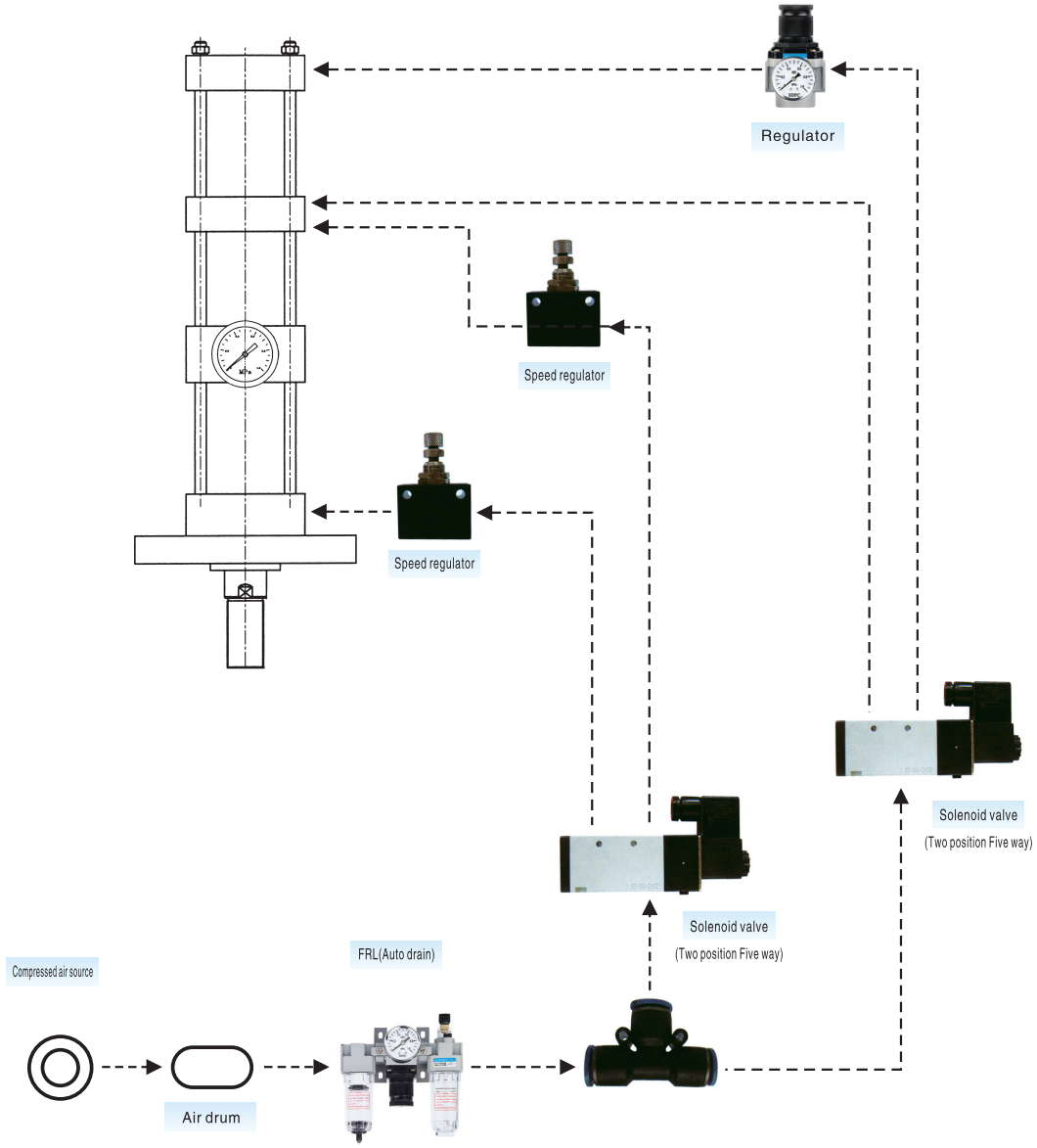

## Air–oil Power Cylinder

### Dimension(mm):

Built–in

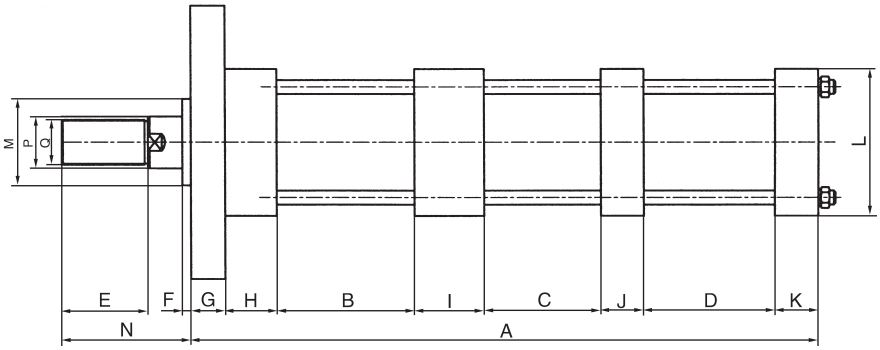


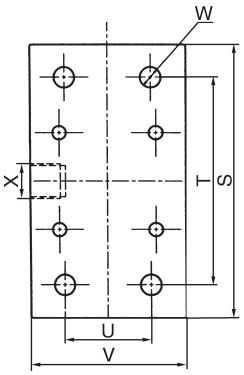


| Inner diameter of oil cylinder(T) | E | F | G | H | I | J | K | L | M | N | P | Q | S | T | U | V | W | X |
|---|---|---|---|---|---|---|---|---|---|---|---|---|---|---|---|---|---|---|
| 50(1T) | 50 | 5 | 20 | 30 | 30 | 25 | 25 | 85×85 | Φ50 | 75 | Φ30 | M26×1.5 | 156 | 120 | 90 | 50 | Φ12 | G1/4" |
| 63(3T) | 50 | 5 | 20 | 35 | 40 | 25 | 25 | 100×100 | Φ55 | 75 | Φ35 | M30×1.5 | 190 | 150 | 105 | 65 | Φ14 | G3/8" |
| 80(5T) | 50 | 5 | 20 | 35 | 40 | 25 | 25 | 114×114 | Φ55 | 90 | Φ35 | M30×1.5 | 220 | 170 | 120 | 70 | Φ16 | G3/8" |
| 100(10T) | 55 | 5 | 25 | 40 | 40 | 30 | 30 | 140×140 | Φ65 | 90 | Φ45 | M40×2 | 250 | 200 | 145 | 80 | Φ20 | G1/2" |
| 100(13T) | 55 | 5 | 25 | 40 | 40 | 30 | 30 | 140×140 | Φ65 | 90 | Φ45 | M40×2 | 250 | 200 | 145 | 80 | Φ20 | G1/2" |
| 125(15T) | 55 | 5 | 25 | 40 | 50 | 30 | 30 | 180×180 | Φ80 | 90 | Φ60 | M50×2 | 320 | 250 | 190 | 120 | Φ22 | G1/2" |
| 125(20T) | 55 | 5 | 25 | 40 | 50 | 30 | 30 | 180×180 | Φ80 | 90 | Φ60 | M50×2 | 320 | 250 | 190 | 120 | Φ22 | G1/2" |
| 160(30T) | 55 | 5 | 30 | 40 | 60 | 40 | 40 | 210×210 | Φ100 | 90 | Φ60 | M63×2 | 355 | 290 | 218 | 140 | Φ30 | G3/4" |
| 160(40T) | 55 | 5 | 40 | 40 | 60 | 40 | 40 | 250×250 | Φ100 | 90 | Φ80 | M63×2 | 390 | 320 | 240 | 160 | Φ35 | G3/4" |

| Tonnage | TTL stroke | Boost stroke | A | B | C | D | TTL stroke | Boost stroke | A | B | C | D | TTL stroke | Boost stroke | A | B | C | D | TTL stroke | Boost stroke | A | B | C | D |
|---|---|---|---|---|---|---|---|---|---|---|---|---|---|---|---|---|---|---|---|---|---|---|---|---|
| 1T | 50 | 5 | 475 | 110 | 110 | 110 | 100 | 5 | 565 | 160 | 135 | 110 | 150 | 5 | 640 | 210 | 170 | 110 | 200 | 5 | 720 | 260 | 110 | 110 |
| | | 10 | 525 | | | 160 | | 10 | 605 | | | 160 | | 10 | 690 | | | 160 | | 10 | 770 | | | 160 |
| | | 15 | 575 | | | 210 | | 15 | 655 | | | 210 | | 15 | 740 | | | 210 | | 15 | 820 | | | 210 |
| | | 20 | 625 | | | 260 | | 20 | 705 | | | 260 | | 20 | 790 | | | 260 | | 20 | 870 | | | 260 |
| 3T | 50 | 5 | 495 | 115 | 105 | 110 | 100 | 5 | 575 | 165 | 135 | 110 | 150 | 5 | 660 | 215 | 170 | 110 | 200 | 5 | 740 | 265 | 105 | 110 |
| | | 10 | 545 | | | 160 | | 10 | 625 | | | 160 | | 10 | 710 | | | 160 | | 10 | 790 | | | 160 |
| | | 15 | 595 | | | 210 | | 15 | 675 | | | 210 | | 15 | 760 | | | 210 | | 15 | 840 | | | 210 |
| | | 20 | 645 | | | 260 | | 20 | 725 | | | 260 | | 20 | 810 | | | 260 | | 20 | 890 | | | 260 |
| 5T | 50 | 5 | 520 | 115 | 110 | 130 | 100 | 5 | 605 | 165 | 145 | 130 | 150 | 5 | 685 | 215 | 175 | 130 | 200 | 5 | 770 | 265 | 110 | 130 |
| | | 10 | 585 | | | 195 | | 10 | 670 | | | 195 | | 10 | 750 | | | 195 | | 10 | 835 | | | 195 |
| | | 15 | 650 | | | 260 | | 15 | 735 | | | 260 | | 15 | 815 | | | 260 | | 15 | 900 | | | 260 |
| | | 20 | 715 | | | 325 | | 20 | 800 | | | 325 | | 20 | 880 | | | 325 | | 20 | 965 | | | 325 |
| 10T | 50 | 5 | 565 | 130 | 110 | 130 | 100 | 5 | 650 | 180 | 145 | 130 | 150 | 5 | 730 | 230 | 175 | 130 | 200 | 5 | 815 | 280 | 110 | 130 |
| | | 10 | 630 | | | 195 | | 10 | 715 | | | 195 | | 10 | 795 | | | 195 | | 10 | 880 | | | 195 |
| | | 15 | 695 | | | 260 | | 15 | 780 | | | 260 | | 15 | 860 | | | 260 | | 15 | 945 | | | 260 |
| | | 20 | 780 | | | 325 | | 20 | 845 | | | 325 | | 20 | 925 | | | 325 | | 20 | 1010 | | | 325 |
| 13T | 50 | 5 | 580 | 130 | 110 | 145 | 100 | 5 | 665 | 180 | 145 | 145 | 150 | 5 | 745 | 230 | 175 | 145 | 200 | 5 | 830 | 280 | 110 | 145 |
| | | 10 | 660 | | | 225 | | 10 | 745 | | | 225 | | 10 | 825 | | | 225 | | 10 | 910 | | | 225 |
| | | 15 | 740 | | | 308 | | 15 | 825 | | | 305 | | 15 | 905 | | | 305 | | 15 | 990 | | | 305 |
| | | 20 | 820 | | | 385 | | 20 | 905 | | | 385 | | 20 | 985 | | | 385 | | 20 | 1070 | | | 385 |
| 15T | 50 | 5 | 583 | 135 | 110 | 138 | 100 | 5 | 668 | 185 | 145 | 138 | 150 | 5 | 748 | 235 | 175 | 138 | 200 | 5 | 833 | 285 | 110 | 138 |
| | | 10 | 648 | | | 203 | | 10 | 733 | | | 203 | | 10 | 813 | | | 203 | | 10 | 898 | | | 203 |
| | | 15 | 713 | | | 268 | | 15 | 798 | | | 268 | | 15 | 878 | | | 268 | | 15 | 963 | | | 268 |
| | | 20 | 778 | | | 333 | | 20 | 863 | | | 333 | | 20 | 943 | | | 333 | | 20 | 1028 | | | 333 |
| 20T | 50 | 5 | 608 | 135 | 110 | 163 | 100 | 5 | 693 | 185 | 145 | 163 | 150 | 5 | 773 | 235 | 175 | 163 | 200 | 5 | 858 | 285 | 110 | 163 |
| | | 10 | 698 | | | 253 | | 10 | 783 | | | 253 | | 10 | 863 | | | 253 | | 10 | 948 | | | 253 |
| | | 15 | 788 | | | 343 | | 15 | 873 | | | 343 | | 15 | 953 | | | 343 | | 15 | 1038 | | | 343 |
| | | 20 | 878 | | | 433 | | 20 | 963 | | | 433 | | 20 | 1043 | | | 433 | | 20 | 1128 | | | 433 |
| 30T | 50 | 5 | 686 | 135 | 125 | 191 | 100 | 5 | 776 | 185 | 165 | 191 | 150 | 5 | 866 | 235 | 205 | 191 | 200 | 5 | 956 | 285 | 125 | 191 |
| | | 10 | 791 | | | 296 | | 10 | 881 | | | 296 | | 10 | 971 | | | 296 | | 10 | 1061 | | | 296 |
| | | 15 | 896 | | | 401 | | 15 | 986 | | | 401 | | 15 | 1076 | | | 401 | | 15 | 1166 | | | 401 |
| | | 20 | 1001 | | | 506 | | 20 | 1091 | | | 506 | | 20 | 1181 | | | 506 | | 20 | 1271 | | | 506 |
| 40T | 50 | 5 | 691 | 135 | 120 | 191 | 100 | 5 | 776 | 185 | 155 | 191 | 150 | 5 | 856 | 235 | 185 | 191 | 200 | 5 | 941 | 285 | 120 | 191 |
| | | 10 | 796 | | | 296 | | 10 | 881 | | | 296 | | 10 | 961 | | | 296 | | 10 | 1046 | | | 296 |
| | | 15 | 901 | | | 401 | | 15 | 988 | | | 401 | | 15 | 1066 | | | 401 | | 15 | 1151 | | | 401 |
| | | 20 | 1006 | | | 506 | | 20 | 1091 | | | 506 | | 20 | 1171 | | | 506 | | 20 | 1256 | | | 506 |

## Air–oil Power Cylinder

## Recommend circuit diagram for speed air–oil power pressure

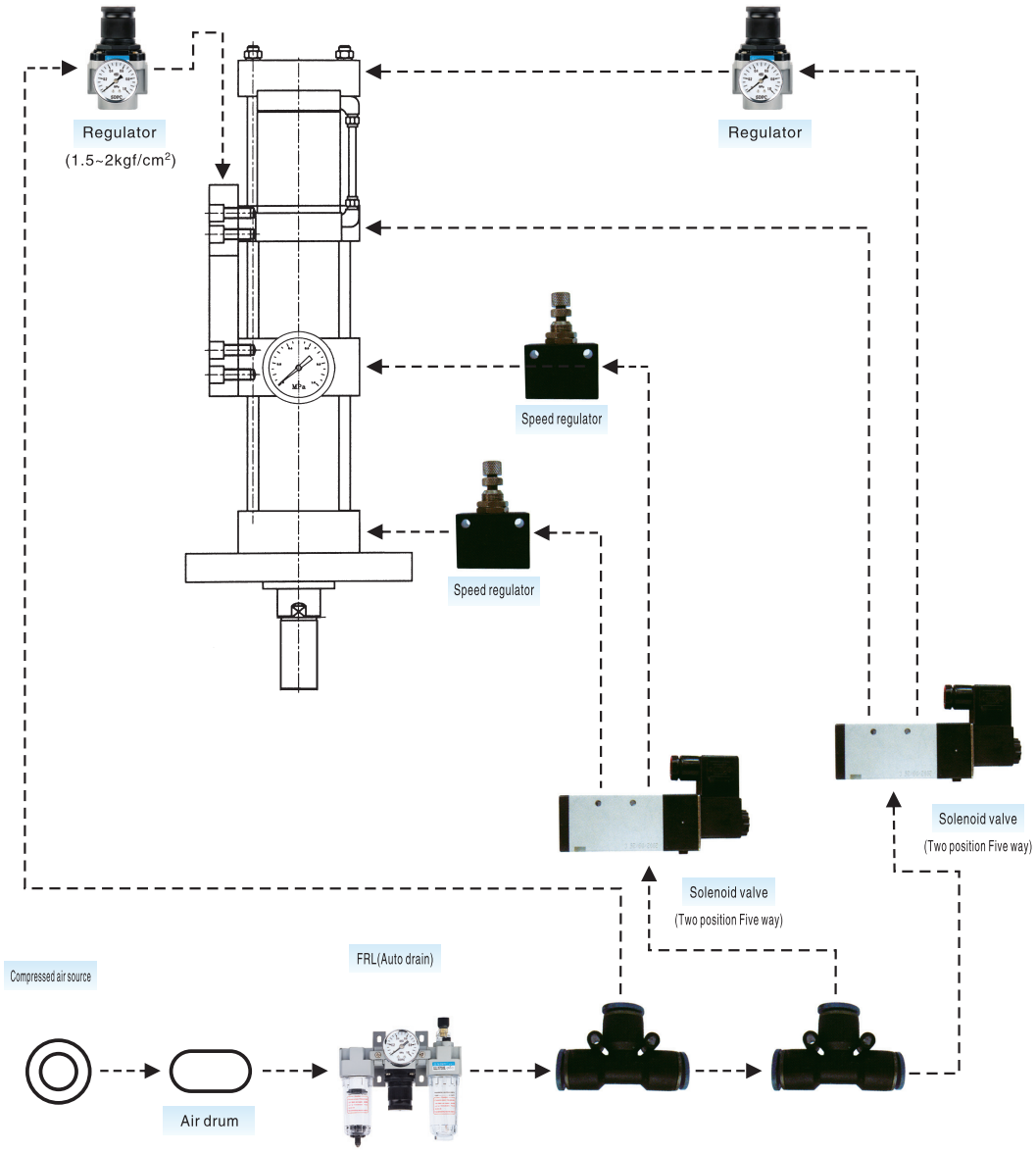

# Air–oil Power Cylinder

## Dimension(mm):

Speed

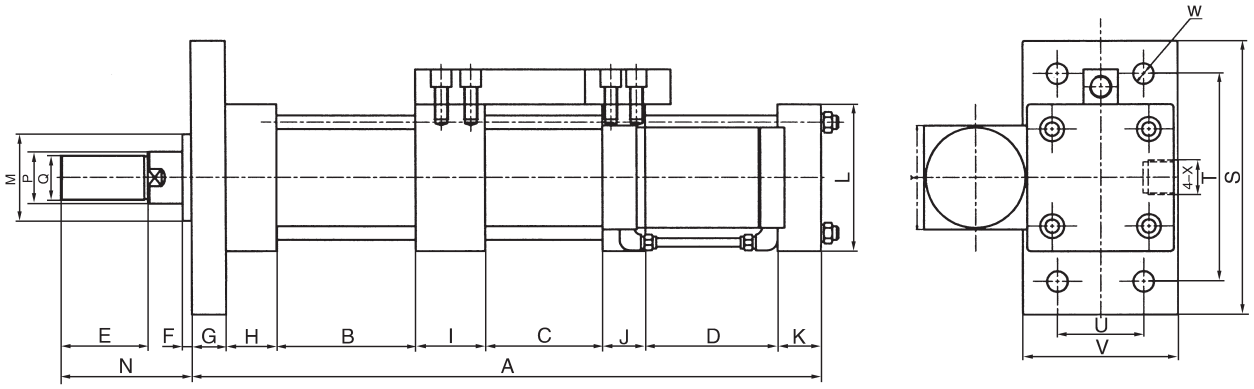


| Inner diameter of oil cylinder(T) | E | F | G | H | I | J | K | L | M | N | P | Q | S | T | U | V | W | X | L |
|---|---|---|---|---|---|---|---|---|---|---|---|---|---|---|---|---|---|---|---|
| 50(1T) | 50 | 5 | 20 | 30 | 30 | 25 | 25 | 85×85 | Φ50 | 75 | Φ30 | M26×1.5 | 156 | 120 | 90 | 50 | Φ12 | G1/4" | 60×60 |
| 63(3T) | 50 | 5 | 20 | 35 | 40 | 25 | 25 | 100×100 | Φ55 | 75 | Φ35 | M30×1.5 | 190 | 150 | 105 | 65 | Φ14 | G3/8" | 69×69 |
| 80(5T) | 50 | 5 | 20 | 35 | 40 | 25 | 25 | 114×114 | Φ55 | 90 | Φ35 | M30×1.5 | 220 | 170 | 120 | 70 | Φ16 | G3/8" | 69×69 |
| 100(10T) | 55 | 5 | 25 | 40 | 40 | 30 | 30 | 140×140 | Φ65 | 90 | Φ45 | M40×2 | 250 | 200 | 145 | 80 | Φ20 | G1/2" | 69×69 |
| 100(13T) | 55 | 5 | 25 | 40 | 40 | 30 | 30 | 140×140 | Φ65 | 90 | Φ45 | M40×2 | 250 | 200 | 145 | 80 | Φ20 | G1/2" | 69×69 |
| 125(15T) | 55 | 5 | 25 | 40 | 50 | 30 | 30 | 180×180 | Φ80 | 90 | Φ60 | M50×2 | 320 | 250 | 190 | 120 | Φ22 | G1/2" | 69×69 |
| 125(20T) | 55 | 5 | 25 | 40 | 50 | 30 | 30 | 180×180 | Φ80 | 90 | Φ60 | M50×2 | 320 | 250 | 190 | 120 | Φ22 | G1/2" | 69×69 |
| 160(30T) | 55 | 5 | 30 | 40 | 60 | 40 | 40 | 210×210 | Φ100 | 90 | Φ60 | M63×2 | 355 | 290 | 218 | 140 | Φ30 | G3/4" | 69×69 |
| 160(40T) | 55 | 5 | 40 | 40 | 60 | 40 | 40 | 250×250 | Φ100 | 90 | Φ80 | M63×2 | 390 | 320 | 240 | 160 | Φ35 | G3/4" | 69×69 |

| Tonnage | TTL stroke | Boost stroke | A | B | C | D | TTL stroke | Boost stroke | A | B | C | D | TTL stroke | Boost stroke | A | B | C | D | TTL stroke | Boost stroke | A | B | C | D |
|---|---|---|---|---|---|---|---|---|---|---|---|---|---|---|---|---|---|---|---|---|---|---|---|---|
| 1T | 50 | 5 | 485 | 95 | 95 | 110 | 100 | 5 | 585 | 145 | 145 | 110 | 150 | 5 | 685 | 195 | 195 | 110 | 200 | 5 | 785 | 245 | 245 | 110 |
| | | 10 | 535 | | | 160 | | 10 | 635 | | | 160 | | 10 | 735 | | | 160 | | 10 | 835 | | | 160 |
| | | 15 | 585 | | | 210 | | 15 | 685 | | | 210 | | 15 | 785 | | | 210 | | 15 | 885 | | | 210 |
| | | 20 | 635 | | | 260 | | 20 | 735 | | | 260 | | 20 | 835 | | | 260 | | 20 | 935 | | | 260 |
| 3T | 50 | 5 | 490 | 95 | 100 | 110 | 100 | 5 | 590 | 145 | 150 | 110 | 150 | 5 | 690 | 195 | 200 | 110 | 200 | 5 | 790 | 245 | 250 | 110 |
| | | 10 | 540 | | | 160 | | 10 | 640 | | | 160 | | 10 | 740 | | | 160 | | 10 | 840 | | | 160 |
| | | 15 | 590 | | | 210 | | 15 | 690 | | | 210 | | 15 | 790 | | | 210 | | 15 | 890 | | | 210 |
| | | 20 | 640 | | | 260 | | 20 | 740 | | | 260 | | 20 | 840 | | | 260 | | 20 | 940 | | | 260 |
| 5T | 50 | 5 | 510 | 95 | 100 | 130 | 100 | 5 | 610 | 145 | 150 | 130 | 150 | 5 | 710 | 195 | 200 | 130 | 200 | 5 | 810 | 245 | 250 | 130 |
| | | 10 | 575 | | | 195 | | 10 | 675 | | | 195 | | 10 | 775 | | | 195 | | 10 | 875 | | | 195 |
| | | 15 | 640 | | | 260 | | 15 | 740 | | | 260 | | 15 | 840 | | | 260 | | 15 | 940 | | | 260 |
| | | 20 | 705 | | | 325 | | 20 | 805 | | | 325 | | 20 | 905 | | | 325 | | 20 | 1005 | | | 325 |
| 10T | 50 | 5 | 545 | 95 | 110 | 130 | 100 | 5 | 645 | 145 | 160 | 130 | 150 | 5 | 745 | 195 | 210 | 130 | 200 | 5 | 845 | 245 | 260 | 130 |
| | | 10 | 610 | | | 195 | | 10 | 710 | | | 195 | | 10 | 810 | | | 195 | | 10 | 910 | | | 195 |
| | | 15 | 675 | | | 260 | | 15 | 775 | | | 260 | | 15 | 875 | | | 260 | | 15 | 975 | | | 260 |
| | | 20 | 740 | | | 325 | | 20 | 840 | | | 325 | | 20 | 940 | | | 325 | | 20 | 1040 | | | 325 |
| 13T | 50 | 5 | 560 | 95 | 110 | 145 | 100 | 5 | 660 | 145 | 160 | 145 | 150 | 5 | 760 | 195 | 210 | 145 | 200 | 5 | 860 | 245 | 260 | 145 |
| | | 10 | 640 | | | 225 | | 10 | 740 | | | 225 | | 10 | 840 | | | 225 | | 10 | 940 | | | 225 |
| | | 15 | 720 | | | 308 | | 15 | 820 | | | 305 | | 15 | 920 | | | 305 | | 15 | 1020 | | | 305 |
| | | 20 | 800 | | | 385 | | 20 | 900 | | | 385 | | 20 | 1000 | | | 385 | | 20 | 1100 | | | 385 |
| 15T | 50 | 5 | 578 | 105 | 110 | 138 | 100 | 5 | 678 | 155 | 160 | 138 | 150 | 5 | 778 | 205 | 210 | 138 | 200 | 5 | 878 | 255 | 260 | 138 |
| | | 10 | 643 | | | 203 | | 10 | 743 | | | 203 | | 10 | 843 | | | 203 | | 10 | 943 | | | 203 |
| | | 15 | 708 | | | 268 | | 15 | 808 | | | 268 | | 15 | 908 | | | 268 | | 15 | 1008 | | | 268 |
| | | 20 | 773 | | | 333 | | 20 | 873 | | | 333 | | 20 | 973 | | | 333 | | 20 | 1073 | | | 333 |
| 20T | 50 | 5 | 603 | 105 | 110 | 163 | 100 | 5 | 703 | 155 | 160 | 163 | 150 | 5 | 803 | 205 | 210 | 163 | 200 | 5 | 903 | 255 | 260 | 163 |
| | | 10 | 693 | | | 253 | | 10 | 793 | | | 253 | | 10 | 893 | | | 253 | | 10 | 993 | | | 253 |
| | | 15 | 783 | | | 343 | | 15 | 883 | | | 343 | | 15 | 983 | | | 343 | | 15 | 1083 | | | 343 |
| | | 20 | 873 | | | 433 | | 20 | 973 | | | 433 | | 20 | 1073 | | | 433 | | 20 | 1173 | | | 433 |
| 30T | 50 | 5 | 696 | 115 | 115 | 191 | 100 | 5 | 796 | 165 | 165 | 191 | 150 | 5 | 896 | 215 | 215 | 191 | 200 | 5 | 996 | 265 | 265 | 191 |
| | | 10 | 801 | | | 296 | | 10 | 901 | | | 296 | | 10 | 1001 | | | 296 | | 10 | 1101 | | | 296 |
| | | 15 | 906 | | | 401 | | 15 | 1006 | | | 401 | | 15 | 1106 | | | 401 | | 15 | 1206 | | | 401 |
| | | 20 | 1011 | | | 506 | | 20 | 1111 | | | 506 | | 20 | 1211 | | | 506 | | 20 | 1311 | | | 506 |
| 40T | 50 | 5 | 716 | 120 | 115 | 199 | 100 | 5 | 816 | 170 | 165 | 199 | 150 | 5 | 916 | 220 | 215 | 199 | 200 | 5 | 1016 | 270 | 265 | 199 |
| | | 10 | 821 | | | 301 | | 10 | 921 | | | 301 | | 10 | 1021 | | | 301 | | 10 | 1121 | | | 301 |
| | | 15 | 926 | | | 406 | | 15 | 1026 | | | 406 | | 15 | 1126 | | | 406 | | 15 | 1226 | | | 406 |
| | | 20 | 1031 | | | 511 | | 20 | 1211 | | | 511 | | 20 | 1231 | | | 511 | | 20 | 1331 | | | 511 |

## Air–oil Power Cylinder

### Mounting:

Mounting as multi–angle,the oil port must ensure upwards when installing.

Vertical overhead mounting(Recommend mounting)

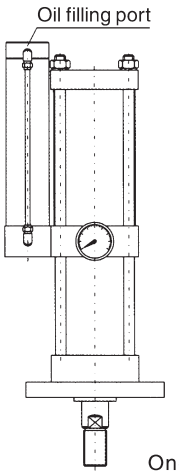


One–piece mounting

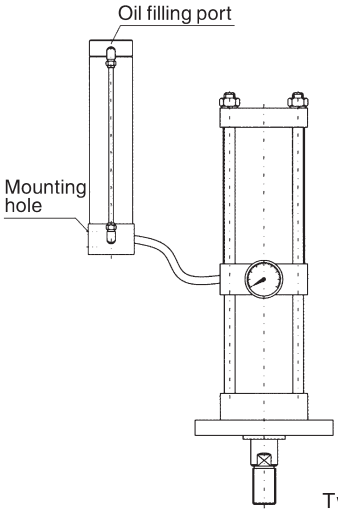


Two–piece mounting

Horizontal mounting

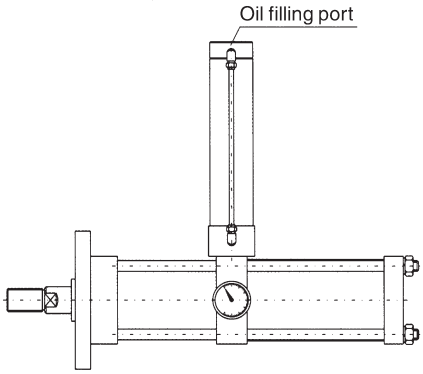


One–piece mounting

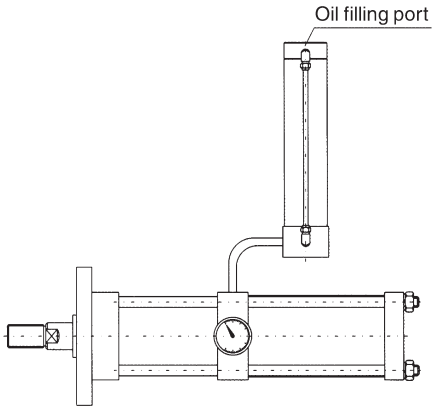


Two–piece mounting

Special mounting

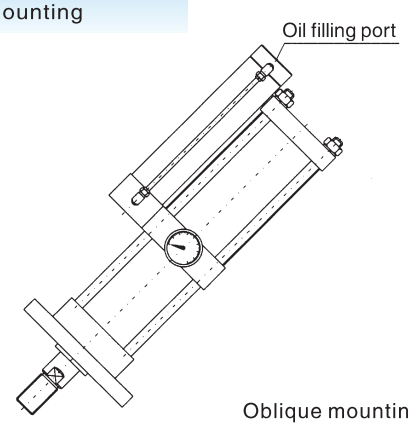


Oblique mounting

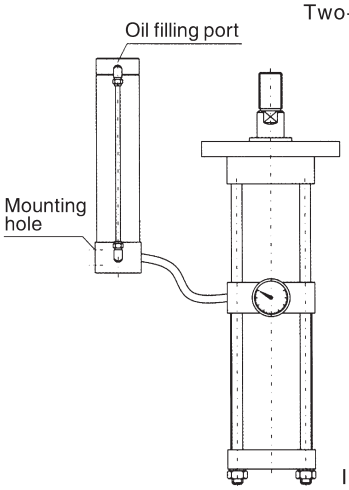


Inverted mounting

## Air–oil Power Cylinder

### Examples of power cylinder application：

Bend forming

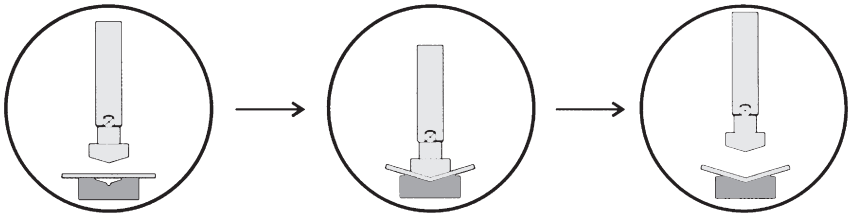

Transfer die

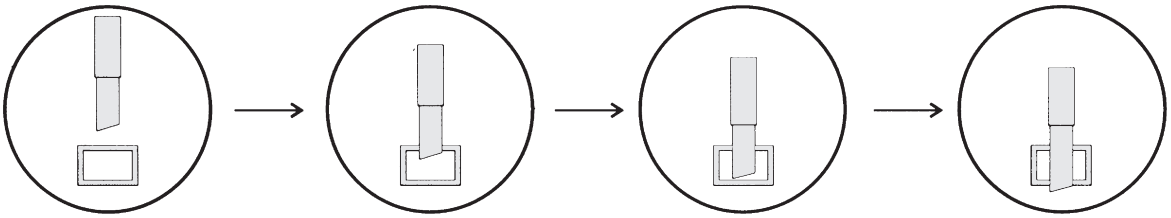

Pressfit

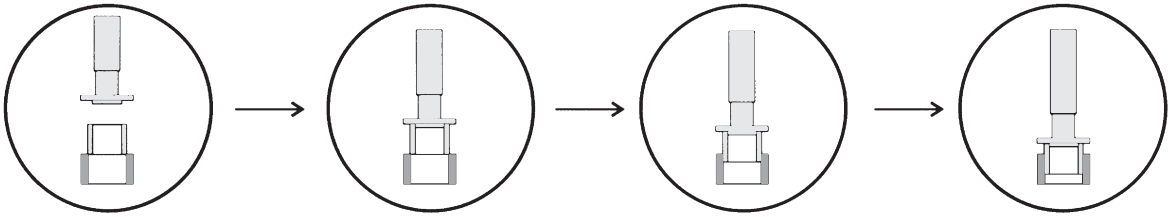

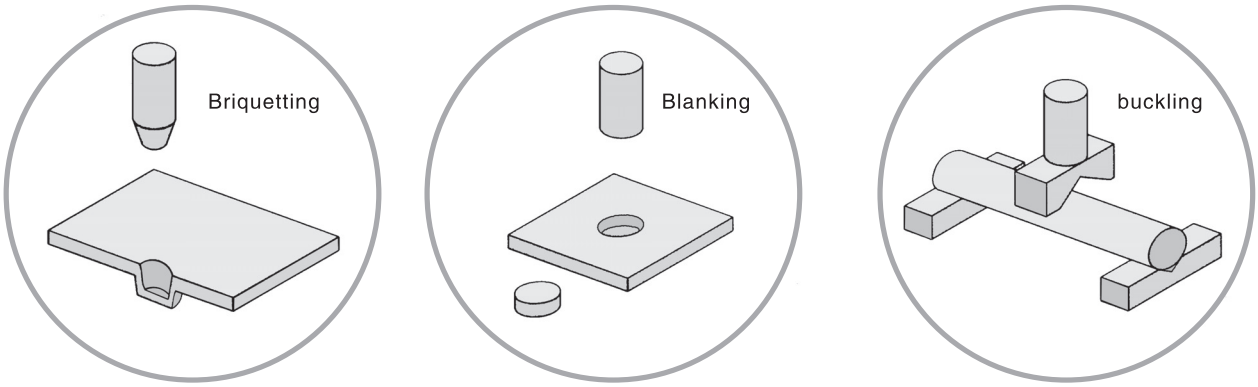

# Magnet Switch

## Wiring diagram:

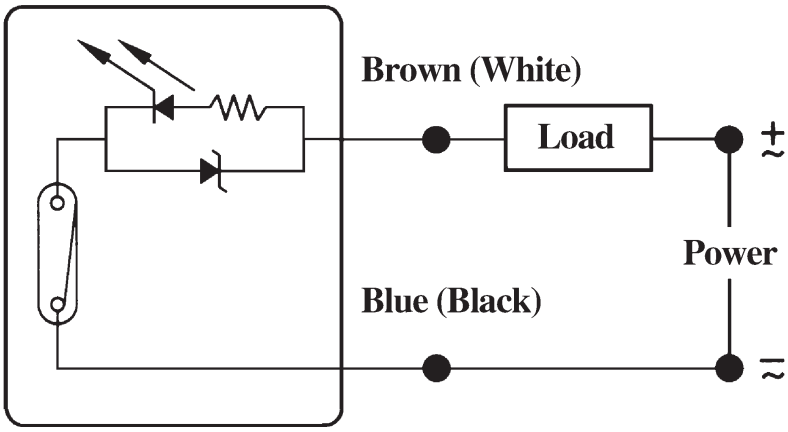


## Technical parameter:

| Sensor switch type | Operating voltage range | Max.Flow switch | Max.contact rating | Impact resistance | Vibration resistance | Ambient temperature | Protection grade | Indicator light | Wire length |
|---|---|---|---|---|---|---|---|---|---|
| CS1-U | 5~240V DC/AC | 100A Max | 10W Max | 30G | 9G | -10~70℃ | IP-67 | LED | 2M |
| CS1-F | 5~240V DC/AC | 100A Max | 10W Max | 30G | 9G | -10~70℃ | IP-67 | LED | 2M |
| CS1-S | 5~240V DC/AC | 100A Max | 10W Max | 30G | 9G | -10~70℃ | IP-67 | LED | 2M |
| CS1-J | 5~240V DC/AC | 100A Max | 10W Max | 30G | 9G | -10~70℃ | IP-67 | LED | 2M |
| CS1-J1 | 5~240V DC/AC | 100A Max | 10W Max | 30G | 9G | -10~70℃ | IP-67 | LED | 2M |
| CS1-G | 5~240V DC/AC | 100A Max | 10W Max | 30G | 9G | -10~70℃ | IP-67 | LED | 2M |
| CS1-H | 5~240V DC/AC | 100A Max | 10W Max | 30G | 9G | -10~70℃ | IP-67 | LED | 2M |



## Product application and Dimension:

| Product application and dimension | Match magnet switch type | Switch Size | Switch Installation Drawing | Clamp Name & Code |
|---|---|---|---|---|
| SC<br>DNG<br>QGB<br>SU<br>SI | CS1–U | 13<br>12<br>11<br>26<br>1.5 | | PAM – 63<br>Accessories Type<br>Inner diameter of Cylinder |
| | CS1–F | 13<br>12<br>11<br>1.5<br>26<br>1.5 | | PI – 63<br>Accessories Type<br>Inner diameter of Cylinder |

## Magnet Switch

### Product application and Dimension：

| Product application and dimension | Match magnet switch type | Switch Size | Switch Installation Drawing | Clamp Name & Code |
|---|---|---|---|---|
| MS<br>MAL | CS1–S | | | BK buckle fastener<br>General type: Suitable for cylinder with 63 bore,bigger than 63 bore, can make to order |
| DNC | CS1–M | | | Clamp Needless |
| SDA | CS1–J | | | Clamp Needless |
| SDA<br>ADVU | CS1–G | | | |
| CQ | CS1–J1 | | | |
| | CS1–H | | | |